QUICKIE

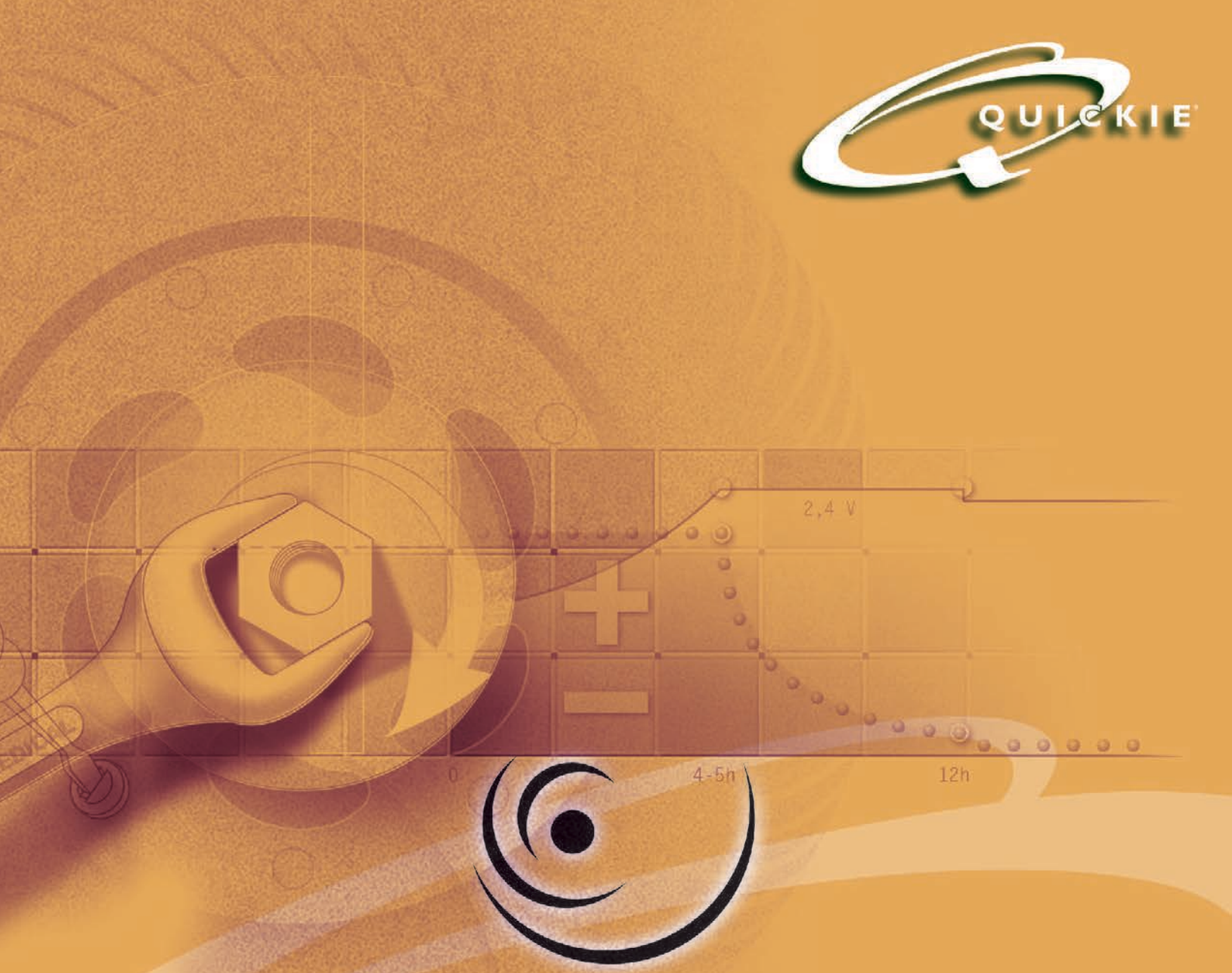

iris

(SERIAL NUMBER PREFIX IRS & IRSE)

PARTS MANUAL

JANUARY 2023

SUNRISE MEDICAL

Improving People's Lives

Cover 1
Multimedia 1
QUICKIE IRIS (SN PREFIX IRS & IRSE) 8
GLOSSARY OF ABBREVIATIONS 8
BASE FRAME 8
FRAME 8
BASE FRAME & ROLLER ASSM after S/N IRS-045100 & IRSE-057300 9
BASE FRAME & ROLLER ASSM prior to S/N IRS-045100 & IRSE-057300 11
ROCKER ASSM after S/N IRS-045100 & IRSE-057300 13
ROCKER ASSM prior to S/N IRS-045100 & IRSE-057300 16
ADJUSTABLE STRUT KIT after S/N IRS-045100 & IRSE-057300 18
STRUT GROWTH KITS prior to S/N IRS-045100 & IRSE-057300 20
TRANSIT KIT WC19 after S/N IRS-045100 & IRSE-057300 & S/N ZRS-041800 & ZRSE-051100 22
TRANSIT KIT IRIS prior to S/N IRS-045100 & IRSE-057300 & S/N ZRS-041800 & ZRSE-051100 24
FOOT RELEASE QUICKIE IRIS 25
TILT CABLES 26
TILT HANDLE & CABLE FOR STROLLER HANDLE & RECLINING BACKREST 27
TILT HANDLE & CABLE FOR HGT ADJ BACKREST 28
AXLE PLATES & AXLES 28
QUICK RELEASE AXLES MATRIX 29
AXLE BRACKETS 30
ONE-ARM DRIVE (S/N Preifx IRS or IRSE only) 32
CASTERS & FORKS 33
CASTER STEM & FORK ASSM 34
3 SPOKE CASTERS 36
8" x 2" CASTERS 38
ANTI-TIPS 38
REAR ANTI-TIPS 39
WHEEL LOCKS 40
FOOTLOCK 41
USER WHEEL LOCK (PUSH TO LOCK) 44
HUB LOCK 46
WHEELS & TIRES 47
WHEELS 47
12" MAG 48
16" MAG 50
TRADITIONAL 6 SPOKE MAG 51
QUICKIE SPOKE 53
LITE SPOKE 54
5 SPOKE MAG 56
TIRES 57
PNEUMATIC & PNEU. AIRLESS TIRE 58
FULL POLY TIRE 59
LOW POLY TIRE 60
KEVLAR TIRE 61
TUBES 61
TUBES AND AIRLESS INSERTS 62
SEATING & POSITIONING 62
SEAT 62
REG & DROP SEAT PAN (SN Prefix IRS or IRSE only) 63
REG & DROP SEAT PAN MONO BACK 66
BACK 67
HEIGHT ADJUSTABLE BACKREST PRIOR TO S/N IRS-007726 & IRSE-008701 67
HEIGHT ADJ BACKREST W/ ADJ STROLLER HANDLE (PRIOR TO S/N IRS-007726 & IRSE-008701) 68
HEIGHT ADJUSTABLE BACKREST AFTER S/N IRS-007726 & IRSE-008701 70
HEIGHT ADJ BACKREST W/ ADJ STROLLER HANDLE (AFTER S/N IRS-007726 & IRSE-008701) 71
TILT CABLES 72
TILT HANDLE & CABLE FOR STROLLER HANDLE & RECLINING BACKREST 73
TILT HANDLE & CABLE FOR HGT ADJ BACKREST 74
STROLLER HANDLE BACKPOSTS 75
STROLLER HANDLE EXTENSION-REMOVABLE 77
RECLINING BACKREST 79
HT ADJUSTABLE W/ADJ STROLLER HANDLE RECLINING BACKREST 81
BACK PLATE REPLACEMENT BOLT KIT (SN Prefix IRS or IRSE only) 85
DYNAMIC BACK 86
MONO BACKREST 88
REG & DROP SEAT PAN MONO BACK 89
BACK SPINE 91
DYNAMIC BACK SPINE 93
MONO BACK MOUNT 95

MONO JAY 3 BACK 96
PUSH HANDLES 101
CANTILEVER ARMREST- MONO BACK 102
MONO VENT TRAY LTV 104
MONO JAY SWING-AWAY LATERALS 105
MONO BACK LATERALS 107
HEADRESTS (FOR USE WITH MONO BACKREST) 107
AXYS HEADREST 108
COBRA HEADREST 109
ONYX HEADREST 110
UNIVERSAL HEADREST MOUNT 112
ADJUST-A-PLUSH HEADREST PAD 113
PLUSH HEADREST PAD 114
HEADS UP 116
POWER TILT 118
BATTERY, CHARGER & CONTROL BOX 119
MOUNTING PLATE AND ACTUATOR 120
POWER TILT RETRO KIT 121
POWER TILT ADJUSTABLE STRUTS 123
POWER TILT FIXED STRUTS 124
POWER TILT TRANSIT STRUT 125
HANGERS & FOOTRESTS 125
SWING AWAY EXT MOUNT HANGERS 125
SWING AWAY EXT MOUNT HANGERS FOR S/N PREFIX CGT & PRIOR TO S/N IRS-007726 & IRSE-008701 125
HANGERS (DISC.4-21-15) 125
60 DEG S/A HANGER (DISC 4-21-15) 126
70 DEG S/A HANGER (DISC 4-21-15) 128
70 DEG V S/A HANGER (DISC 4-21-15) 129
FOOTPLATES & EXTENSIONS (D2 "OLD STYLE") 130
COMPOSITE FOOTPLATE 131
ADULT ANGLE-ADJUSTABLE FOOTPLATE EXT MOUNT 133
KIDS ANGLE ADJUSTABLE FOOTPLATE EXT MOUNT 135
LOCKING ANGLE ADJUSTABLE FOOTPLATE 137
PLATFORM FLIP-UP FOOTPLATE 140
DOUBLE D FOOTREST EXTENSION TUBE "OLD STYLE" 142
SWING AWAY EXT MOUNT HANGERS AFTER S/N IRS-007726 & IRSE-008701 & prior to S/N IRS-045100 & IRSE-057300 143
HANGERS 143
60 DEG HANGER SWING IN-OUT 144
70 DEG HANGER SWING IN-OUT 145
80 DEG HANGER SWING IN-OUT 146
FOOTPLATES 148
COMPOSITE FOOTPLATE 148
ADULT ANGLE-ADJ FOOTPLATE EXT MOUNT 153
KIDS ANGLE ADJ FOOTPLATE EXTENSION MOUNT 157
PLATFORM FLIP-UP FOOTPLATE 161
LOCKING ANGLE ADJ FOOTPLATE 163
HIGH MOUNT EXTENSION TUBE 165
SWING AWAY EXT MOUNT HANGERS after S/N IRS-045100 & IRSE-057300 166
60 DEG SWING IN/OUT HANGER 167
70 DEG SWING IN/OUT HANGER 168
80 DEG SWING IN/OUT HANGER 169
COMPOSITE FOOTPLATE 170
ADULT ALUMINUM ANGLE-ADJ FOOTPLATE EXT MOUNT 174
PLATFORM FLIP-UP FOOTPLATE 178
COMPOSITE ANGLE ADJUSTABLE FOOT PLATE 180
FRONT MOUNT HANGERS 182
SWING AWAY FRONT MOUNT HANGERS FOR S/N CGT & PRIOR TO S/N IRS-007726 & IRSE-008701 182
70 DEG FRONT MOUNT HANGER SWING IN-OUT 183
70 DEG S/A FRONT MOUNT HANGER 185
80 DEG FRONT MOUNT HANGER SWING IN-OUT 186
80 DEG S/A FRONT MOUNT HANGER 188
90 DEG FRONT MOUNT HANGER SWING IN-OUT 190
90 DEG S/A FRONT MOUNT HANGER 192
EXTENSION TUBES 193
FRONT MOUNT HANGER EXT 194
FOOTPLATES 194
KIDS ANGLE ADJ FOOTPLATE FRONT MOUNT 195
ADULT ANGLE-ADJ FOOTPLATE FRONT MOUNT 198
90 DEG FOOTBOARD 200

SWING AWAY FRONT MOUNT HANGERS after S/N IRS-007726 & IRSE-008701 & prior to S/N IRS-045100 & IRSE-057300 ... 201
70 DEG FRONT MOUNT HANGER SWING IN-OUT ... 202
80 DEG FRONT MOUNT HANGER SWING IN-OUT ... 204
90 DEG FRONT MOUNT HANGER SWING IN-OUT ... 206
EXTENSION TUBES ... 207
FRONT MOUNT HANGER EXT ... 208
FOOTPLATES ... 208
KIDS ANGLE ADJ FOOTPLATE FRONT MOUNT ... 209
ADULT ANGLE-ADJ FOOTPLATE FRONT MOUNT ... 212
90 DEG FOOTBOARD ... 214
SWING AWAY FRONT MOUNT HANGERS after S/N IRS-045100 & IRSE-057300 ... 215
70 DEG FRONT MOUNT SWING IN/OUT HANGER ... 216
80 DEG FRONT MOUNT SWING IN/OUT HANGER ... 218
90 DEG FRONT MOUNT SWING IN/OUT HANGER ... 220
EXTENSION TUBES ... 221
FRONT MOUNT HANGER EXT ... 222
FOOTPLATES ... 222
KIDS ANGLE ADJ FOOTPLATE FRONT MOUNT ... 223
ADULT ANGLE-ADJ FOOTPLATE FRONT MOUNT ... 226
90 DEG FOOTBOARD ... 228
LIFT OFF FRONT MOUNT HANGERS ... 229
70 DEG LIFT-OFF HANGER ... 230
80 DEG LIFT-OFF HANGER ... 232
90 DEG LIFT-OFF HANGER ... 234
EXTENSION TUBES ... 235
FRONT MOUNT HANGER EXT ... 236
FOOTPLATES ... 236
KIDS ANGLE ADJ FOOTPLATE FRONT MOUNT ... 237
ADULT ANGLE-ADJ FOOTPLATE FRONT MOUNT ... 240
90 DEG FOOTBOARD ... 242
ELR prior to S/N IRS-045100 & IRSE-057300 ... 243
EXT MOUNT ELR HANGERS ... 243
EXT MOUNT ELR HANGERS ... 243
ELEVATING HANGER ... 244
ELR & ALR CALF PAD 14 -15" ... 246
ELR & ALR CALF PAD 16-20" ... 247
EXTENSION TUBES ... 247
DOUBLE D FOOTREST EXTENSION TUBE "OLD STYLE" ... 248
FOOTPLATES ... 249
ELR ALUMINUM FOOTPLATE ... 250
ADULT ANGLE-ADJUSTABLE FOOTPLATE EXT MOUNT ... 252
KIDS ANGLE ADJUSTABLE FOOTPLATE EXT MOUNT ... 254
FRONT MOUNT ELR HANGERS ... 255
FRONT MOUNT ELR HANGERS ... 255
90 DEG ELEVATING HANGER ... 256
90 DEG ELEVATING CALF PAD ... 258
EXTENSION TUBES ... 258
FRONT MOUNT HANGER EXT ... 259
FOOTPLATES ... 259
KIDS ANGLE ADJ FOOTPLATE FRONT MOUNT ... 260
ADULT ANGLE-ADJ FOOTPLATE FRONT MOUNT ... 263
ELR after S/N IRS-045100 & IRSE-057300 (LATCH STUD STYLE) (DISC. 2/6/17) ... 264
FRONT MOUNT ELR (LATCH STUD STYLE) (DISC. 2/6/17) ... 264
FRONT MOUNT ELR (LATCH STUD STYLE) (DISC. 2/6/17) ... 265
90 DEG ELEVATING CALF PAD ... 267
FRONT MOUNT HANGER EXT ... 268
ADULT ANGLE-ADJ FOOTPLATE FRONT MOUNT ... 269
ELR ALR KNUCKLE COVERS ... 271
EXTENSION MOUNT (LATCH STUD STYLE) (DISC. 2/6/17) ... 271
EXTENSION MOUNT ELR RETROFIT (LATCH STUD STYLE) (DISC. 2/6/17) ... 272
EXTENSION MOUNT ELR REPLACEMENT PARTS (LATCH STUD STYLE) (DISC. 2/6/17) ... 273
ELR & ALR CALF PAD 14 -15" ... 275
ELR & ALR CALF PAD 16-20" ... 276
ADULT ALUMINUM ANGLE-ADJ FOOTPLATE EXT MOUNT ... 277
ELR/ALR ALUMINUM FOOTPLATE ... 281
ELR ALR KNUCKLE COVERS ... 283
ALR prior to S/N IRS-045100 & IRSE-057300 ... 283
EXT MOUNT ALR HANGERS ... 283
EXT MOUNT ALR HANGERS ... 283

ARTICULATING HANGER ... 284
ARTICULATING HANGER CALF PAD ... 286
EXTENSION TUBES ... 286
ROUND EXTENSION TUBE ... 287
FOOTPLATES ... 288
ADULT ANGLE-ADJUSTABLE FOOTPLATE EXT MOUNT ... 289
KIDS ANGLE ADJUSTABLE FOOTPLATE EXT MOUNT ... 291
FRONT MOUNT ALR HANGERS ... 292
FRONT MOUNT ALR HANGERS ... 292
90 DEG ARTICULATING HANGER ... 293
90 DEG ARTICULATING HANGER CALF PAD ... 295
FOOTPLATES ... 295
KIDS ANGLE ADJ FOOTPLATE FRONT MOUNT ... 296
ADULT ANGLE-ADJ FOOTPLATE FRONT MOUNT ... 299
ALR after S/N IRS-045100 & IRSE-057300 (LATCH STUD STYLE) (DISC. 2/6/17) ... 300
ALR (LATCH STUD STYLE) (DISC. 2/6/17) ... 301
ELR & ALR CALF PAD 14 -15" ... 303
ELR & ALR CALF PAD 16-20" ... 304
ELR/ALR ALUMINUM FOOTPLATE ... 305
ADULT ALUMINUM ANGLE-ADJ FOOTPLATE EXT MOUNT ... 307
COMPOSITE ANGLE ADJUSTABLE FOOT PLATE ... 311
ELR ALR KNUCKLE COVERS ... 314
SWING IN-OUT ELR & ALR (PLUNGER STYLE) (EFFECTIVE 2/6/17) ... 314
FRONT MOUNT ELR (PLUNGER STYLE) (EFFECTIVE 2/6/17) ... 314
SWING IN-OUT FRONT MOUNT ELR RETRO KITS (PLUNGER STYLE) (EFFECTIVE 2/6/17) ... 315
SWING IN-OUT FRONT MOUNT ELR REPLACEMENT PARTS (PLUNGER STYLE) (EFFECTIVE 2/6/17) ... 316
90 DEG ELEVATING CALF PAD ... 318
FRONT MOUNT HANGER EXT ... 319
ADULT ANGLE-ADJ FOOTPLATE FRONT MOUNT ... 320
KIDS ANGLE ADJ FOOTPLATE FRONT MOUNT ... 322
EXTENSION MOUNT ELR & ALR (PLUNGER STYLE) (EFFECTIVE 2/6/17) ... 324
SWING IN-OUT EXT MOUNT ELR & ALR RETROFIT (PLUNGER STYLE) (EFFECTIVE 2/6/17) ... 325
SWING IN-OUT EXT MOUNT ELR REPLACEMENT PARTS (PLUNGER STYLE) (EFFECTIVE 2/6/17) ... 326
SWING IN-OUT ALR EXT MNT REPLACEMENT PARTS (PLUNGER STYLE)(EFFECTIVE 2/6/17) ... 328
ELR & ALR CALF PAD 14 -15" ... 330
ELR & ALR CALF PAD 16-20" ... 331
EXTENSION MOUNT FOOTPLATES ... 331
COMPOSITE FOOTPLATE ... 332
COMPOSITE ANGLE ADJUSTABLE FOOT PLATE ... 336
ADULT ALUMINUM ANGLE-ADJ FOOTPLATE EXT MOUNT ... 339
KIDS ANGLE ADJUSTABLE FOOTPLATE EXT MOUNT ... 343
ELR/ALR ALUMINUM FOOTPLATE ... 345
ELR ALR KNUCKLE COVERS ... 347
CONTRACTURE FOOTREST ... 347
CONTRACTURE FOOTREST ... 348
Z-FINITY HANGERS ... 350
Z-FINITY SWING I/O EXTENSION MOUNT HANGERS ... 351
Z-FINITY SWING I/O DIRECT MOUNT HANGERS ... 352
DIVIDED FOOTREST EXTENSION MOUNT ... 353
DIVIDED FOOTREST DIRECT MOUNT ... 357
FLIP-UP FOOTREST EXTENSION MOUNT ... 359
FLIP-UP FOOTREST DIRECT MOUNT ... 362
MULTI-POSITION LATCH STUD SUPPORT ... 364
JAY LOWER EXTREMITY S/A SUPPORT ... 365
ARMRESTS & RECEIVERS ... 365
SINGLE POST ARMRESTS FOR S/N CGT & PRIOR TO S/N IRS-007726 & IRSE-008701 ... 365
SINGLE POST HEIGHT ADJUSTABLE ARMREST (MANUAL PRODUCTS) ... 366
SINGLE POST ARMRESTS AFTER S/N IRS-007726 & IRSE-008701 & PRIOR TO S/N IRS-063000 & IRSE-083000 ... 368
SINGLE POST HEIGHT ADJUSTABLE ARMREST ... 369
SINGLE POST ARMRESTS AFTER S/N IRS-063000 & IRSE-083000 ... 370
SINGLE POST HEIGHT ADJ ARMREST ... 371
DUAL POST ARMRESTS & RECEIVERS ... 372
DUAL POST ARMREST & RECEIVER ... 373
DUAL POST HGT ADJ ARMREST & RECEIVER ... 375
CANTILEVER ARMREST - MONO BACK ... 376
CANTILEVER ARMREST- MONO BACK ... 377
FLIP-UP ARMRESTS ... 378
LENGTH ADJUSTABLE LOCKING FLIP-UP ARMREST (USE ON DAB FRAMES ONLY) ... 379
ADJUSTABLE LOCKING FLIP-UP ARMREST (USE ON DAB FRAMES ONLY) ... 381
RECEIVERS ... 383

SINGLE POST ARMREST RECEIVERS FOR S/N CGT & PRIOR TO S/N IRS-007726 & IRSE-008701 383
ADULT SINGLE POST ARMREST RECEIVER 383
KIDS SINGLE POST ARMREST RECEIVER 385
SINGLE POST ARMREST RECEIVERS AFTER S/N IRS-007726 & IRSE-008701 & PRIOR TO S/N IRS-063000 & IRSE-083000 385
SINGLE POST ARMREST RECEIVER - STD 386
SINGLE POST ARMREST RECEIVER - LOW 387
SINGLE POST ARMREST RECEIVERS AFTER S/N IRS-063000 & IRSE-083000 388
SINGLE POST ARMREST RECEIVER 389
DUAL POST ARMREST RECEIVERS 389
DUAL POST ARMREST RECEIVER -FIXED 390
DUAL POST ARMREST RECEIVER -FLIP BACK 391
POSITIONING 392
JAY FULL FOOT BOX WITH DIVIDER 393
JAY FULL FOOT BOX 395
JAY SINGLE FOOT BOX 396
JAY ARM TROUGH FIXED & ROTATIONAL 397
ACCESSORIES 397
BACKPACKS AND POUCHES 397
BACKPACKS AND SEAT POUCHES 398
QUICKIE SIDE POCKET 399
CELL PHONE PACK 400
LEG STRAPS 400
ADJUSTABLE LEG STRAP 401
SOFT FEEL LEG STRAP 402
POSITIONING BELTS 402
AIRCRAFT BUCKLE POSITIONING BELTS & ATTACHMENT KITS 403
AUTO BUCKLE POSITIONING BELT & ATTACHMENT KITS 405
DUAL PULL SIDE SQUEEZE POSITIONING BELT 407
JAY 2 POINT POSITIONING BELT 408
SIDE GUARDS 409
PLASTIC SIDE GUARDS FOR S/N CGT & PRIOR TO S/N IRS-007726 & IRSE-008701 409
PLASTIC SIDE GUARD 410
PLASTIC SIDE GUARDS AFTER S/N IRS-007726 & IRSE-008701 410
SIDE GUARDS 411
SPOKE GUARDS 411
SPOKE GUARDS QUICKIE (Black & Clear) 412
TRAYS 415
TUFFAK TRAY (MANUAL & PEDIATRIC CHAIRS) 415
PADDED STOMACH CUTOUT 417
PROTRACTOR PAD 418
HINGED OVERLAY NON-REMOVABLE 419
HINGED OVERLAY REMOVABLE 420
TRAY RIBS TUFFAK 422
VENT TRAYS 422
VENT TRAY LTV & TRILOGY 423
VENT & BATTERY TRAY 425
QUICKIE CADDY 427
JAY LOWER EXTREMITY S/A SUPPORT 428
IMPACT GUARD NEOPRENE & GEL VELCRO PADS 429
CANOPY 430
ANGLE ADJ IV POLE 431
OXYGEN TANK HOLDER 432
ONE-ARM DRIVE (S/N Preifx IRS or IRSE only) 433
TIRE PUMP 435
UTILITY HOOK 436
WATER BOTTLE AND CAGE 437

GLOSSARY OF ABBREVIATIONS

Note: see Informations Panel for file.

1AD	One Arm Drive
3DCR	3DX Microclimatic cover for Cryo style inserts
AAA	Adult Angle Adjustable
AACM	Angle Adjustable Center Mount
ABD	Abductor
AC	All Court
AD	Arm Drive
ADJ	Adjustable
ADPT	Adapter
AE	Air Exchange
AHAB	ASAP II
ANG	Angle
ALR	Articulating Legrest
ALUM	Aluminum
AMH	Adjustable Mounting Hardware
ANO	Anodized
ASAP	Adjustable Seating and Positioning
ASL	Adaptive Switch Labratories
ASM	Assembly (includes other parts)
ASSM	Assembly
ASSMLY	Assembly
ASSY	Assembly
AT	Anti-tip
ATT	Attachment
BB	Basketball
BC	Breezy Chrome
BCK	Back
BCKBRD	Backboard
BH	Button Head
BHCS	Button Head Cap Screw
BKL	Buckle
BKRST	Backrest
B-LOCK	Back Lock
BLD	Build Up
BLK	Black
BLU	Blue
BR	Breezy
BRD	Board
BRNG	Bearing
BRKT	Bracket
BSHNG	Bushing
BTTN	Button
BTTRY	Battery
BZ	Breezy
CAA	Composite Angle Adjustable
CG	Center of Gravity
CGT	Center of Gravity Tilt (AKA: IRIS)
CHRGR	Charger
CJSM	Color Joystick Module
CLMP	Clamp
CLNCHR	Clincher
CLR	Clear
COMP	Complete
CMPST	Composite
CRM	Chrome
C/S	Cap Screw
C-S	Countersunk
CSTR	Caster
CUSH	Cushion
CV	Conventional
CVR	Cover
CVRS	Covers
CYL	Cylinder
CZ	Cozy
DAB	Depth-adjustable Back
DB	Dynamic Back
DBL	Double
DC	Deep Contour
DL	Desk Length
DP	Dual Post Armrest
D-Post	Dual Post Armrest
D-PST	Dual Post Armrest
DRP	Drop (seat)
DRV	Drive
DTT	Diagnostic Test Tool
DY	Dynamic Back
EA	Each
ELR	Elevating Legrest
EXT	Extension
EXTND	Extended
F	Folding Frame
FHCS	Flat Head Cap Screw
FL	Full Length
FLD	Folding
FL FT	Flip-up Footrest
FLP	Flip
FLRD	Flared
FM	Foam
FM	Front Mount
FNDR	Fender
FPH	Folding Push Handle
FT	Foot
F/REST	Footrest
FRNT	Front
FT PLT	Footplate
FTRST	Footrest
F/UP	Flip-up
FWD	Front Wheel Drive
FXT	Fixed
G8	Grade 8 higher grade = stronger
GP	Quickie GP
GPS	Quickie GPS
GPV	Quickie GPV
GNRC	Generic
H	Hole
HB	High Brake
HD	Head or Heavy Duty
H/D	Heavy Duty
HDRST	Headrest
HDWR	Hardware
HEX	Hexagon
HH	Hemi-Height or Hex Head
HK	Hook
HL	Heel Loops
HM	High Mount
HNDL	Handle
HNGR	Hanger
HP	High Pressure
HR	Handrim
HRDWR	Hardware
HRNSS	Harness
HS	High Speed
HT	Height or Heat Treated
ID	Inner/Inside Dimension Diameter
I N	In/Out (for swing in/out hangers)
INBRD	Inboard
INC	Incontinent
INH	Inhibit
INORG	Inorganic coating
INSRT	Insert
I/O	Swing In Out
IRIS	Intelligent Rotation in Space
ISM	Intelligent Seating Module
JA	Jay Active
JNR	Junior
KAA	Kids Angle Adjustable
KDS	Kids
KT	Kit (usually consists of all mounting hardware for one side)
KVLR	Kevlar
KZ	Quickie Kidz/Zippie Kidz
L	Left
LAT	Lateral
LCK	Lock
LFH	Left Front Horizontal
LFT	Left
LFV	Left Front Vertical
LH	Left Hand
LH	Left Horizontal
LK	Lock
LNG	Long
LO	Lift Off
L/O	Lift Off
LP	Loop
LPS	Loops
LRG	Large
LRH	Left Rear Horizontal
LRV	Left Rear Vertical
LS	Low Sheer
LT	Long Tab
LT	Natural Fit Lite Handrims
LTRL	Lateral
LUMB	Lumbar
LV	Left Vertical
LW	Low
LX	Quickie LX
LXI	Quickie LXi
MACH	Machine
MECH	Mechanism
MED	Medium
mm	Millimeter
MNT	Mount
MNTG	Mounting
MOD	Modify or Modification
M/S	Machine Screw
MWD	Mid Wheel Drive
Nat.Fit	Natural Fit Handrim
NAUG	Naugahyde
NF	Non-folding
NF	Natural Fit Handrim
NFLT	Natural Fit Lite Handrim
NR	Non-recessed
OBLIQ	Obliquity
OBLQ	Oblique
OD	Outer/Outside Dimension
O/S	Old Style
OUTBRD	Outboard
P1	Quickie P100
P2	Quickie P200
P3	Quickie P300
P5	Quickie/Zippie P500
PCB	Pediatric Center of Gravity (AKA: Zippie Iris)
PCM	Power Center Mount
PED	Pediatric
PEL	Pelvic
PH	Push Handle
PHIL	Phillips
P/L	Pin Lock
PL	Plated
PLL	Pull
PLT	Plate
PLST	Plastic
PLY	Plywood
PNEU	Pneumatic
PNK	Pink
PNT	Paint
PNTD	Painted
POLY	Polyurethane
POST	Posterior
PR	Pressure Relieving
PR	Power Recline
PR	Pair
(PR)	Pair
PRCR	Premium Leatherette cover for Cryo style inserts
PRE-ISC	Pre-Ischial
PREM	Premium Leatherette cover material
PROJ	Projection
PRPL	Purple
PRTL	Partial
PSH	Push
PT	Point
PTTRN	Pattern
PWR	Power
Q1	Quickie 1
Q2	Quickie 2
Q2HP	Quickie 2 High Performance
QC	Quickie Carbon
QR	Quick Release
QRx	Quickie RX
QTi	Quicke Titanium
QT/QTS	Quickie Tilt & Space
QUAD	Quadrant Pad
R	Right
RCLNR	Recliner
REC	Receiver
REG	Regular
REL	Release
REV	Reverse
RH	Right Hand
RH	Right Horizontal
RFH	Right Front Horizontal
RFV	Right Front Vertical
RNUT(S)	Rivnut(s)
RoHS	Restriction of Hazardous Substances
RR	Rear
RRH	Right Rear Horizontal
RRV	Right Rear Vertical
RT	Right
RV	Right Vertical
RV	Quickie Revolution
RWD	Rear Wheel Drive
SA	Swing Away
S/A	Swing Away
S/F	Side Frame
SCW	Screw
SDLE	Saddle
SG	Side Guard
SGTG	Super Grip Thumb Guard
SHCS	Socket Head Cap Screw
SHSS	Socket Head Set Screw
SHLDR	Shoulder
SHT	Short
SLD	Solid
SLNG	Sling
SLTD	Slotted
SLV	Sleeve
SM	Small
SNGL	Single
SOC	Socket
SPCR	Spacer
SPEC CLR	Specify Color
SPHA	Single Post Height Adjustable
SPK	Spoke
SPR	Super Grip Handrim
SQZ	Squeeze
SS	Stainless Steel
ST	Seat
S/TAP	Self Tapping
STCR	Stretch Cover for Cryo Style inserts
STD	Standard
STL	Style
STR	Stretch cover material
STRLR	Stroller
STRT	Straight
SUP	Support
SYS	System
T	Tab
TG	Thumb Guard (std)
THRD	Threaded
Ti	Titanium
TL	Tall
TLC	Tilt Lift Comb
TLT	Tilt
TNNS	Tennis
TS	Tilt-in-Space
TTS	Tilt-in-Space
UNIV	Universal
UNTHRD	Unthreaded
UPH	Upholstery
VERT	Vertical
W	With
W/	With
WD	Wide
W/F	Water Fall
W/O	Without
WHL	Wheel
WLDMNT	Weldment
XS	Cross Spoke
YLW	Yellow
Z2	Zippie 2
ZN	Zinc
ZP	Zippie
ZP2	Zippie 2

Pos.	Item Number	Description	Remarks
		GLOSSARY OF ABBREVIATIONS	see attachment in Informations Panel

NOTE: SECOND STRUT TUBE USED ONLY FOR HD OPTION.

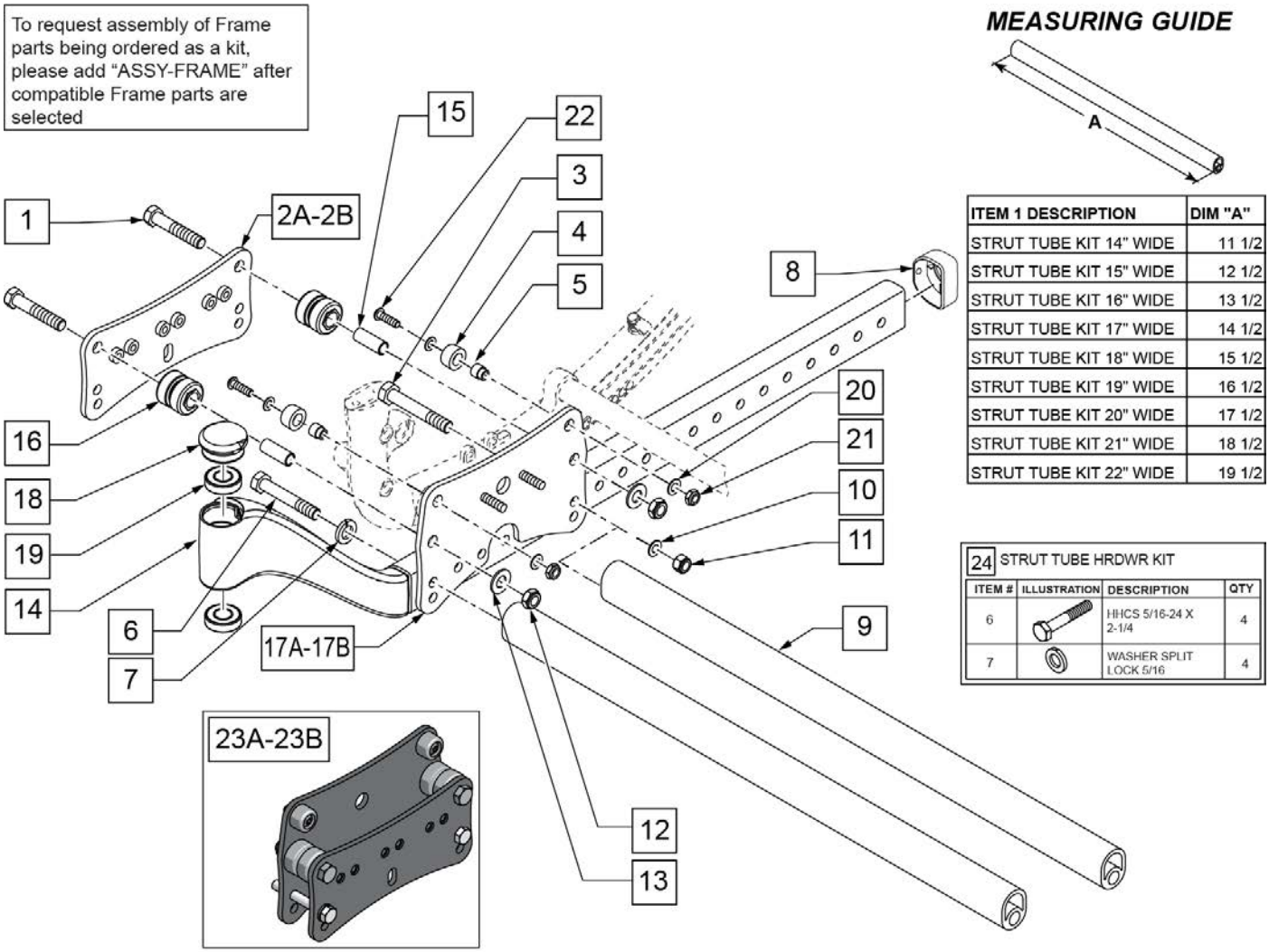

ITEM 1 DESCRIPTION	DIM "A"
STRUT TUBE KIT 14" WIDE	11 1/2
STRUT TUBE KIT 15" WIDE	12 1/2
STRUT TUBE KIT 16" WIDE	13 1/2
STRUT TUBE KIT 17" WIDE	14 1/2
STRUT TUBE KIT 18" WIDE	15 1/2
STRUT TUBE KIT 19" WIDE	16 1/2
STRUT TUBE KIT 20" WIDE	17 1/2
STRUT TUBE KIT 21" WIDE	18 1/2
STRUT TUBE KIT 22" WIDE	19 1/2

Pos.	Item Number	Description	Remarks
1	105890	HHCS 3/8-24 X 2 ROHS	
2A	124951	PLATE ROLLER OUTER STD	
2B	124952	PLATE ROLLER OUTER HD	
3	106985	HHCS 5/16 -24 x 2 ROHS	
4,5,20-22	129594	UPPER ROLLER KIT	
6	106986	HHCS 5/16 -24" x 2 1/4 ROHS	
7	106951	WASHER SPLIT LOCK 5/16 ROHS	
8	105809	CAP TUBE BASE	
10	106946	WASHER FLAT AN 5/16 ROHS	
11	106938	NUT NYLOCK 5/16 -24 ROHS	
12	105889	3/8 -24 NYLOCK NUT THIN BLACK	
13	106948	WASHER FLAT SAE 3/8 ROHS	
1,12,13,15,16	129595	LOWER ROLLER KIT	
17A	105818	PLATE ROLLER INNER	Non HD Chairs
17B	105820	PLATE ROLLER INNER HD	HD Chairs only

Pos.	Item Number	Description	Remarks
18	116255	CAP CASTER	
19	349500	1 1/8 x 1/2 BEARING	
6,7,9	108192	STRUT TUBE KIT 14" WIDE	Includes 1 Tube
6,7,9	108193	STRUT TUBE KIT 15" WIDE	Includes 1 Tube
6,7,9	108194	STRUT TUBE KIT 16" WIDE	Includes 1 Tube
6,7,9	108195	STRUT TUBE KIT 17" WIDE	Includes 1 Tube
6,7,9	108196	STRUT TUBE KIT 18" WIDE	Includes 1 Tube
6,7,9	108197	STRUT TUBE KIT 19" WIDE	Includes 1 Tube
6,7,9	108198	STRUT TUBE KIT 20" WIDE	Includes 1 Tube
6,7,9	108199	STRUT TUBE KIT 21" WIDE	Includes 1 Tube
6,7,9	108200	STRUT TUBE KIT 22" WIDE	Includes 1 Tube
8,14,19	108204S	BASE WELDMENT ASSM R	RIGHT
8,14,19	108205S	BASE WELDMENT ASSM L	LEFT
20	106944	WASHER FLAT THIN AN 1/4	
21	106935	NUT NYLOCK THIN 1/4-28	
22	106960	1/4-28 X 7/8 BUTTON HEAD	
23A	126228	ROLLER ASSEMBLY STD	Non HD Chairs-one side only
23B	126229	ROLLER ASSEMBLY HD	HD Chairs only-one side only
24	108201	STRUT TUBE HARDWARE KIT (4)	SET OF 4
		Ship assembled part #	Use with multiple assemblies
	ASSY-FRAME	FRAME ASSY REQUIRED	add with Frame kit

NOTE: SECOND STRUT TUBE USED ONLY FOR HD OPTION.

NOTE: when replacing Roller Assembly on chairs built prior to s/n IRS-020876 & IRSE-028386 User Wheel Locks must be replaced if present; see User Wheel Lock page. Attendant Wheel Locks require new clamp assembly; see Footlock page.

NOTE: beginning with s/n IRS-020876 & IRSE-028386 Wheel Locks have been changed. New Outer Roller Plates are required if changing to new Wheel Locks.

Part Changes, please see notes/remarks for important information

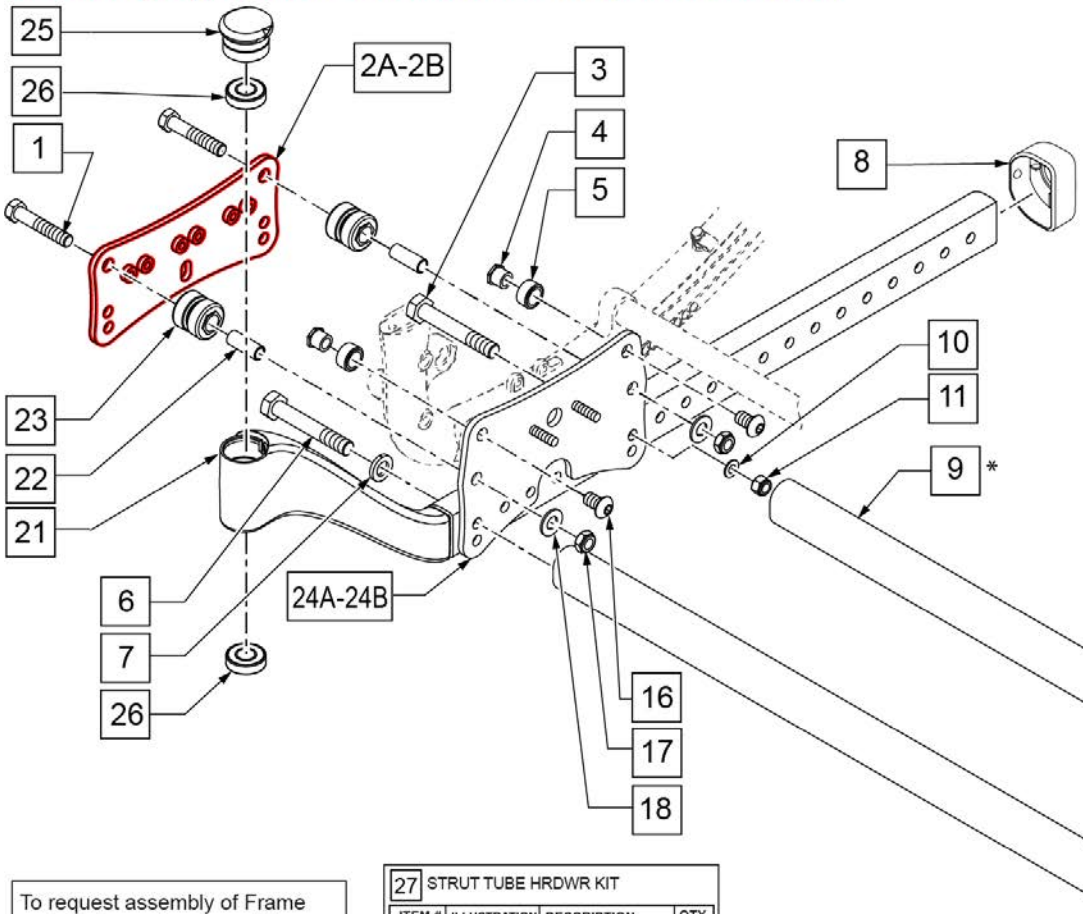

MEASURING GUIDE

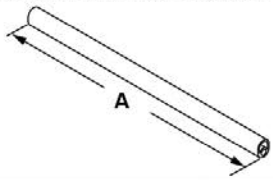

ITEM 1 DESCRIPTION	DIM "A"
STRUT TUBE KIT 14" WIDE	11 1/2
STRUT TUBE KIT 15" WIDE	12 1/2
STRUT TUBE KIT 16" WIDE	13 1/2
STRUT TUBE KIT 17" WIDE	14 1/2
STRUT TUBE KIT 18" WIDE	15 1/2
STRUT TUBE KIT 19" WIDE	16 1/2
STRUT TUBE KIT 20" WIDE	17 1/2
STRUT TUBE KIT 21" WIDE	18 1/2
STRUT TUBE KIT 22" WIDE	19 1/2

To request assembly of Frame parts being ordered as a kit, please add "ASSY-FRAME" after compatible Frame parts are selected

27 STRUT TUBE HRDWR KIT

ITEM #	ILLUSTRATION	DESCRIPTION	QTY
6		HHCS 5/16-24 X 2-1/4	4
7		WASHER SPLIT LOCK 5/16	4

Pos.	Item Number	Description	Remarks
1	105890	HHCS 3/8-24 X 2 ROHS	
2A	124951	PLATE ROLLER OUTER STD	
2B	124952	PLATE ROLLER OUTER HD	
3	106985	HHCS 5/16 -24 x 2 ROHS	

Pos.	Item Number	Description	Remarks
6	106986	HHCS 5/16 -24" x 2 1/4 ROHS	
7	106951	WASHER SPLIT LOCK 5/16 ROHS	
8	105809	CAP TUBE BASE	
10	106946	WASHER FLAT AN 5/16 ROHS	
11	106938	NUT NYLOCK 5/16 -24 ROHS	
12	106932	NUT NYLOCK 1/4 -20 ROHS	
13	106945	WASHER FLAT SAE 1/4 ROHS	
15	500698	PLATE PLUNGER ROLLER	
16	105897	BHCS 3/8 -24 x 5/8 PL ROHS	
17	105889	3/8 -24 NYLOCK NUT THIN BLACK	
18	106948	WASHER FLAT SAE 3/8 ROHS	
1,17,18,22,23	108203	ROLLER LOWER KIT (4)	SET OF 4
24A	105818	PLATE ROLLER INNER	Non HD Chairs
24B	105820	PLATE ROLLER INNER HD	HD Chairs only
25	116255	CAP CASTER	
26	349500	1 1/8 x 1/2 BEARING	
27	108201	STRUT TUBE HARDWARE KIT (4)	SET OF 4
6,7,9	108192	STRUT TUBE KIT 14" WIDE	Includes 1 Tube
6,7,9	108193	STRUT TUBE KIT 15" WIDE	Includes 1 Tube
6,7,9	108194	STRUT TUBE KIT 16" WIDE	Includes 1 Tube
6,7,9	108195	STRUT TUBE KIT 17" WIDE	Includes 1 Tube
6,7,9	108196	STRUT TUBE KIT 18" WIDE	Includes 1 Tube
6,7,9	108197	STRUT TUBE KIT 19" WIDE	Includes 1 Tube
6,7,9	108198	STRUT TUBE KIT 20" WIDE	Includes 1 Tube
6,7,9	108199	STRUT TUBE KIT 21" WIDE	Includes 1 Tube
6,7,9	108200	STRUT TUBE KIT 22" WIDE	Includes 1 Tube
8,21,26	108204S	BASE WELDMENT ASSM R	RIGHT
8,21,26	108205S	BASE WELDMENT ASSM L	LEFT
1,2A,4,5,10,11,16,17,18,22,23,24A	124994	ROLLER ASSEMBLY STD	Non HD Chairs-one side only
1,2B,4,5,10,11,16,17,18,22,23,24B	125047	ASSY ROLLER	HD Chairs only-one side only
		Ship assembled part #	Use with multiple assemblies
	ASSY-FRAME	FRAME ASSY REQUIRED	add with Frame kit

Note: For complete Strut Kits, please see "Strut Growth Kits" page.

Note: if retrofitting Flared or Offset Hanger Receivers to a chair, 2" wider Footrests are required.

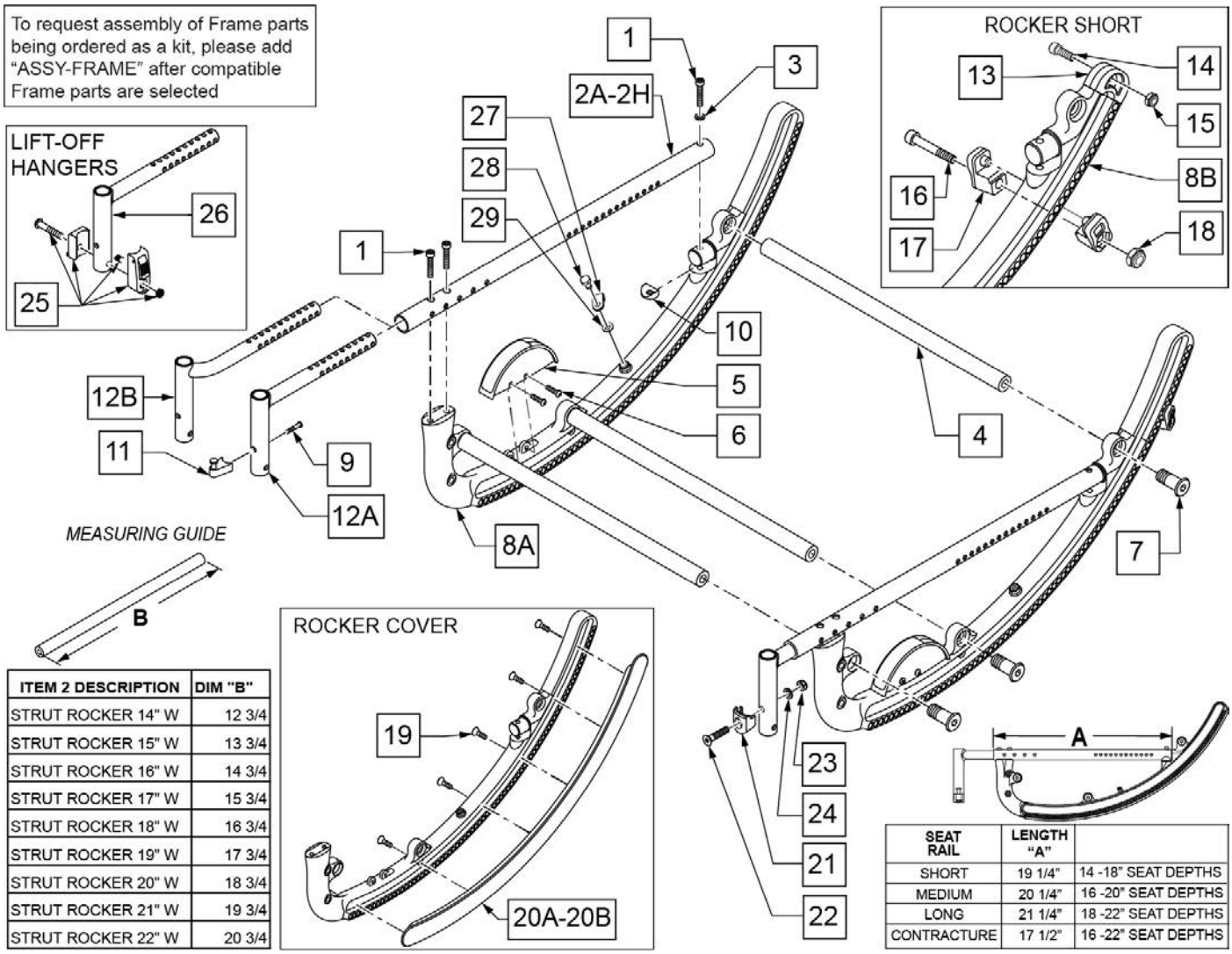

ITEM 2 DESCRIPTION	DIM "B"
STRUT ROCKER 14" W	12 3/4
STRUT ROCKER 15" W	13 3/4
STRUT ROCKER 16" W	14 3/4
STRUT ROCKER 17" W	15 3/4
STRUT ROCKER 18" W	16 3/4
STRUT ROCKER 19" W	17 3/4
STRUT ROCKER 20" W	18 3/4
STRUT ROCKER 21" W	19 3/4
STRUT ROCKER 22" W	20 3/4

SEAT RAIL	LENGTH "A"	
SHORT	19 1/4"	14 -18" SEAT DEPTHS
MEDIUM	20 1/4"	16 -20" SEAT DEPTHS
LONG	21 1/4"	18 -22" SEAT DEPTHS
CONTRACTURE	17 1/2"	16 -22" SEAT DEPTHS

Pos.	Item Number	Description	Remarks
1	106976	SHCS 1/4 -28 x 1 1/2 ROHS	
2A	105800-001S	TUBE SEAT SHORT	SHORT NON-HD (ALUM)
2B	105800-002S	TUBE SEAT MED	MED NON-HD (ALUM)
2C	105800-003S	TUBE SEAT LONG	LONG NON-HD (ALUM)
2D	105800-004S	TUBE SEAT CONTRACTURE	CONT NON-HD (ALUM)
2E	105800-005S	TUBE SEAT HD SHORT	SHORT HD (STEEL)
2F	105800-006S	TUBE SEAT HD MED	MED HD (STEEL)

Pos.	Item Number	Description	Remarks
2G	105800-007S	TUBE SEAT HD LONG	LONG HD (STEEL)
2H	105800-008S	TUBE SEAT HD CONTRACTURE	CONT HD (STEEL)
3	106943	WASHER FLAT AN 1/4 ROHS	
4	105832-001	STRUT ROCKER 14" W	
4	105832-002	STRUT ROCKER 15" W	
4	105832-003	STRUT ROCKER 16" W	
4	105832-004	STRUT ROCKER 17" W	
4	105832-005	STRUT ROCKER 18" W	
4	105832-006	STRUT ROCKER 19" W	
4	105832-007	STRUT ROCKER 20" W	
4	105832-008	STRUT ROCKER 21" W	
4	105832-009	STRUT ROCKER 22" W	
6	106952	BHCS 10 -32 x 1/2 ROHS	
7	108179	ROCKER HDWR KIT (6)	QTY 6
9	106982	BHCS 5/16 -18 x 1 3/4 SHLD ROHS	
10	561004	1" SADDLE 1/4" HOLE	
9,11	107491	LATCH STUD KIT	For ELR's & ALR's shipped prior to 2/6/17
12B	119846	HANGER SPPRT 1IN FLARE RH	Right- for 1" Offset
12B	119847	HANGER SPPRT 1IN FLARE LH	Left - for 1" Offset
13	126318	CAP ROCKER	
14	106974	SHCS 1/4 -28 x 3/4 PL ROHS	
15	106935	NUT NYLOCK THIN 1/4 -28 ROHS	
16	106957	SHCS 10 -32 x 1 1/4 ROHS	
17	560349	TILT STOP ROCKER	1 peice
18	106931	NUT NYLOCK THIN 10 -32 ROHS	
19	129799	#6 X 1/2" FL DH PHL SCREW BLK	
20A	126195	ROCKER COVER SHORT	For 40 deg
20B	126196	ROCKER COVER STD	For 55 deg
22	103500-010	FHCSM6X1X35FULLNP	For Swing-in/out Legrest
23	104381	NUT HEX NYLOCK M6X1.0	For Swing-in/out Legrest
24	104414	WAVE WASHER 6MM	
25	920720	FOOTREST BLOCK ASSEMBLY W/BOLT HD	For HD Lift Off Hangers
26	542126	WELDMENT SUPPORT HANGER	
27	105799	P-CLIP 3/16" BLACK	
28	106953	HHCS 10-32 X 3/8 ROHS	
29	267340	#10 WASHER INT LOCK ZN	
4,7	108180	STRUT ROCKER KIT 14" W	set of 3
4,7	108181	STRUT ROCKER KIT 15" W	set of 3
4,7	108182	STRUT ROCKER KIT 16" W	set of 3
4,7	108183	STRUT ROCKER KIT 17" W	set of 3
4,7	108184	STRUT ROCKER KIT 18" W	set of 3
4,7	108185	STRUT ROCKER KIT 19" W	set of 3
4,7	108186	STRUT ROCKER KIT 20" W	set of 3
4,7	108187	STRUT ROCKER KIT 21" W	set of 3
4,7	108188	STRUT ROCKER KIT 22" W	set of 3
5,6	108191	ANGLE INDICATOR KIT	
5,6,8A,27-29	129596	IRIS ROCKER KIT 55 DEG	55 deg of range
5,6,8B,13-18,27-29	129597	IRIS ROCKER KIT 40 DEG	40 deg of range
9,11,12A	129598	STD HANGER REC W/ LATCH	PAIR-For ELR & ALR only
9,11,12B	120037	OFFSET HANGER ASSM RIGHT	see note; FLARED; Right- For ELR's & ALR's shipped prior to 2/6/17
9,11,12B	120038	OFFSET HANGER ASSM LEFT	see note; FLARED; Left- For ELR's & ALR's shipped prior to 2/6/17

Pos.	Item Number	Description	Remarks
9,11,12B	129599	1" FLARED REC W/ LATCH	see note; OFFSET; Pair-For ELR & ALR only
12A,21-23	129600	STD RECVR W/ SWING IN/OT LATCH	Pair-For Swing-in/out Legrest
12B,21-23	129601	1" FLRD REC SWING IN/OUT LATCH	see note; OFFSET; Kit includes Left & Right-For Swing-in/out Legrest
16-18	119557	TILT STOP KIT	
21-24	119514	LATCH RECEIVER KIT	For Swing-in/out Legrest
		Ship assembled part #	Use with multiple assemblies
	ASSY-FRAME	FRAME ASSY REQUIRED	add with Frame kit

ROCKER ASSM prior to S/N IRS-045100 & IRSE-057300

Note: For complete Strut Kits, please see "Strut Growth Kits" page.

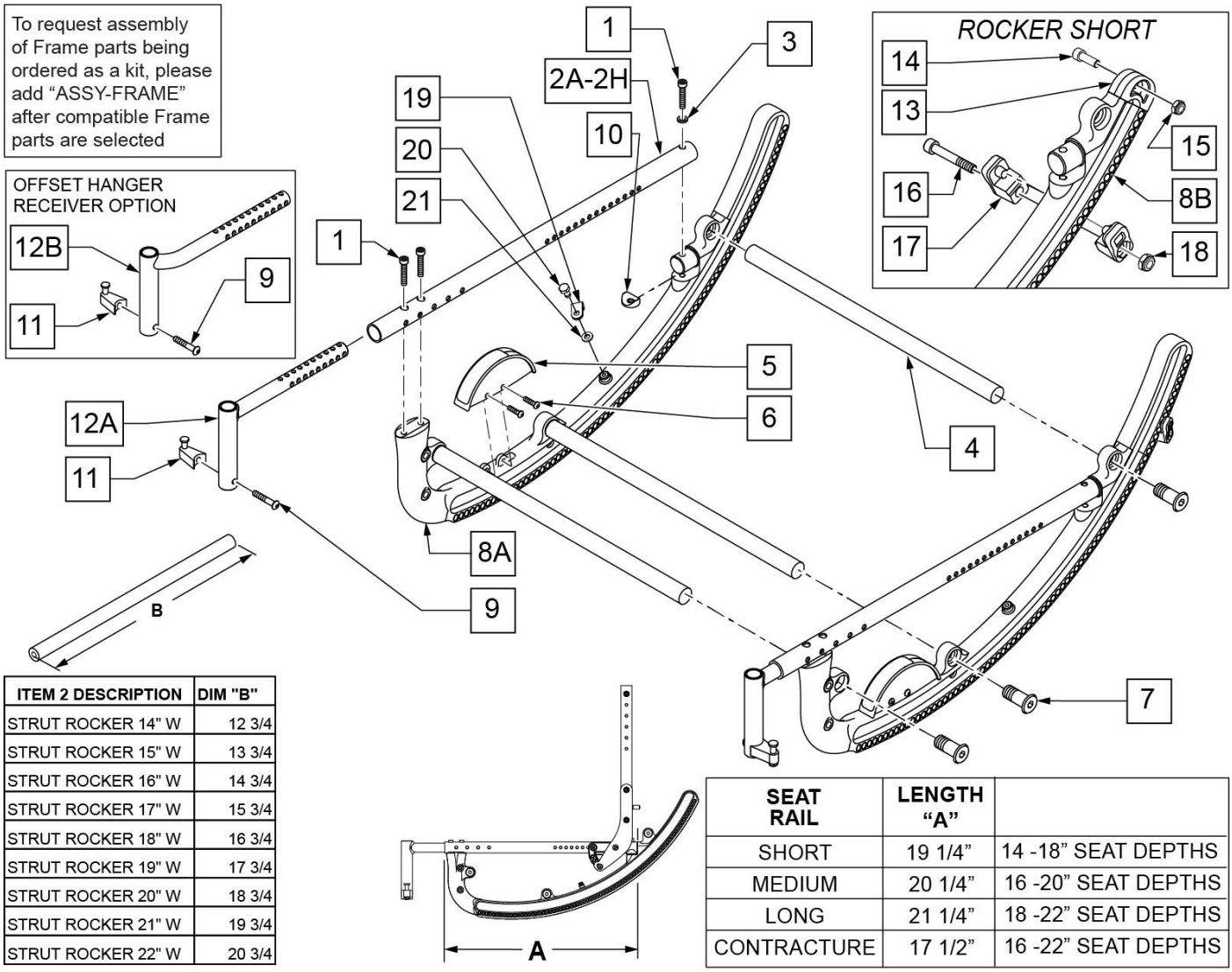

ITEM 2 DESCRIPTION	DIM "B"
STRUT ROCKER 14" W	12 3/4
STRUT ROCKER 15" W	13 3/4
STRUT ROCKER 16" W	14 3/4
STRUT ROCKER 17" W	15 3/4
STRUT ROCKER 18" W	16 3/4
STRUT ROCKER 19" W	17 3/4
STRUT ROCKER 20" W	18 3/4
STRUT ROCKER 21" W	19 3/4
STRUT ROCKER 22" W	20 3/4

SEAT RAIL	LENGTH “A”	
SHORT	19 1/4”	14 -18” SEAT DEPTHS
MEDIUM	20 1/4”	16 -20” SEAT DEPTHS
LONG	21 1/4”	18 -22” SEAT DEPTHS
CONTRACTURE	17 1/2”	16 -22” SEAT DEPTHS

Pos.	Item Number	Description	Remarks
1	106976	SHCS 1/4 -28 x 1 1/2 ROHS	
2A	105800-001S	TUBE SEAT SHORT	SHORT NON-HD (ALUM)
2B	105800-002S	TUBE SEAT MED	MED NON-HD (ALUM)
2C	105800-003S	TUBE SEAT LONG	LONG NON-HD (ALUM)
2D	105800-004S	TUBE SEAT CONTRACTURE	CONT NON-HD (ALUM)
2E	105800-005S	TUBE SEAT HD SHORT	SHORT HD (STEEL)
2F	105800-006S	TUBE SEAT HD MED	MED HD (STEEL)
2G	105800-007S	TUBE SEAT HD LONG	LONG HD (STEEL)
2H	105800-008S	TUBE SEAT HD CONTRACTURE	CONT HD (STEEL)
3	106943	WASHER FLAT AN 1/4 ROHS	
4	105832-001	STRUT ROCKER 14" W	
4	105832-002	STRUT ROCKER 15" W	
4	105832-003	STRUT ROCKER 16" W	

Pos.	Item Number	Description	Remarks
4	105832-004	STRUT ROCKER 17" W	
4	105832-005	STRUT ROCKER 18" W	
4	105832-006	STRUT ROCKER 19" W	
4	105832-007	STRUT ROCKER 20" W	
4	105832-008	STRUT ROCKER 21" W	
4	105832-009	STRUT ROCKER 22" W	
6	106952	BHCS 10 -32 x 1/2 ROHS	
7	108179	ROCKER HDWR KIT (6)	QTY 6
9	106982	BHCS 5/16 -18 x 1 3/4 SHLD ROHS	
10	561004	1" SADDLE 1/4" HOLE	
11	105787	LATCH STUD SUPPORT BLK	
13	105798	CAP ROCKER	
14	106974	SHCS 1/4 -28 x 3/4 PL ROHS	
15	106935	NUT NYLOCK THIN 1/4 -28 ROHS	
16	106957	SHCS 10 -32 x 1 1/4 ROHS	
17	560349	TILT STOP ROCKER	1 peice
18	106931	NUT NYLOCK THIN 10 -32 ROHS	
19	105799	P-CLIP 3/16" BLACK	
20	106953	HHCS 10-32 X 3/8 ROHS	
21	267340	#10 WASHER INT LOCK ZN	
4,7	108180	STRUT ROCKER KIT 14" W	SET OF 3
4,7	108181	STRUT ROCKER KIT 15" W	SET OF 3
4,7	108182	STRUT ROCKER KIT 16" W	SET OF 3
4,7	108183	STRUT ROCKER KIT 17" W	SET OF 3
4,7	108184	STRUT ROCKER KIT 18" W	SET OF 3
4,7	108185	STRUT ROCKER KIT 19" W	SET OF 3
4,7	108186	STRUT ROCKER KIT 20" W	SET OF 3
4,7	108187	STRUT ROCKER KIT 21" W	SET OF 3
4,7	108188	STRUT ROCKER KIT 22" W	SET OF 3
5,6	108191	ANGLE INDICATOR KIT	
5,6,8A,13-21	108189	ROCKER STD W/INDCTR	
5,6,8B,13-21	108190	ROCKER SHORT W/ INDICATOR	40 DEG OF RANGE
9,11,12A	640205	TUBE FRONT HANGER ASSM	
9,11,12B	120037	OFFSET HANGER ASSM RIGHT	RIGHT
9,11,12B	120038	OFFSET HANGER ASSM LEFT	LEFT
		Ship assembled part #	Use with multiple assemblies
	ASSY-FRAME	FRAME ASSY REQUIRED	add with Frame kit

ADJUSTABLE STRUT KIT after S/N IRS-045100 & IRSE-057300

Note: when growing chair to 20" or more, new Tilt Cables may need to be ordered if so equipped.

Note: When growing chair equipped with Foot Release to 19" or more, rocker pin tube may need to be replaced.

Note: Chairs equipped with Footlock that were ordered originally as 14" wide will need 2 spacers (p/n 127210) when adjusting to wider configuration. See Footlock page.

Note: Adjustable Struts are not compatible with One Arm Drive.

Note: if growing/shrinking a chair that has the WC19 Transit a new Strut Rocker Transit Tube is required. See TRANSIT KIT WC19 page.

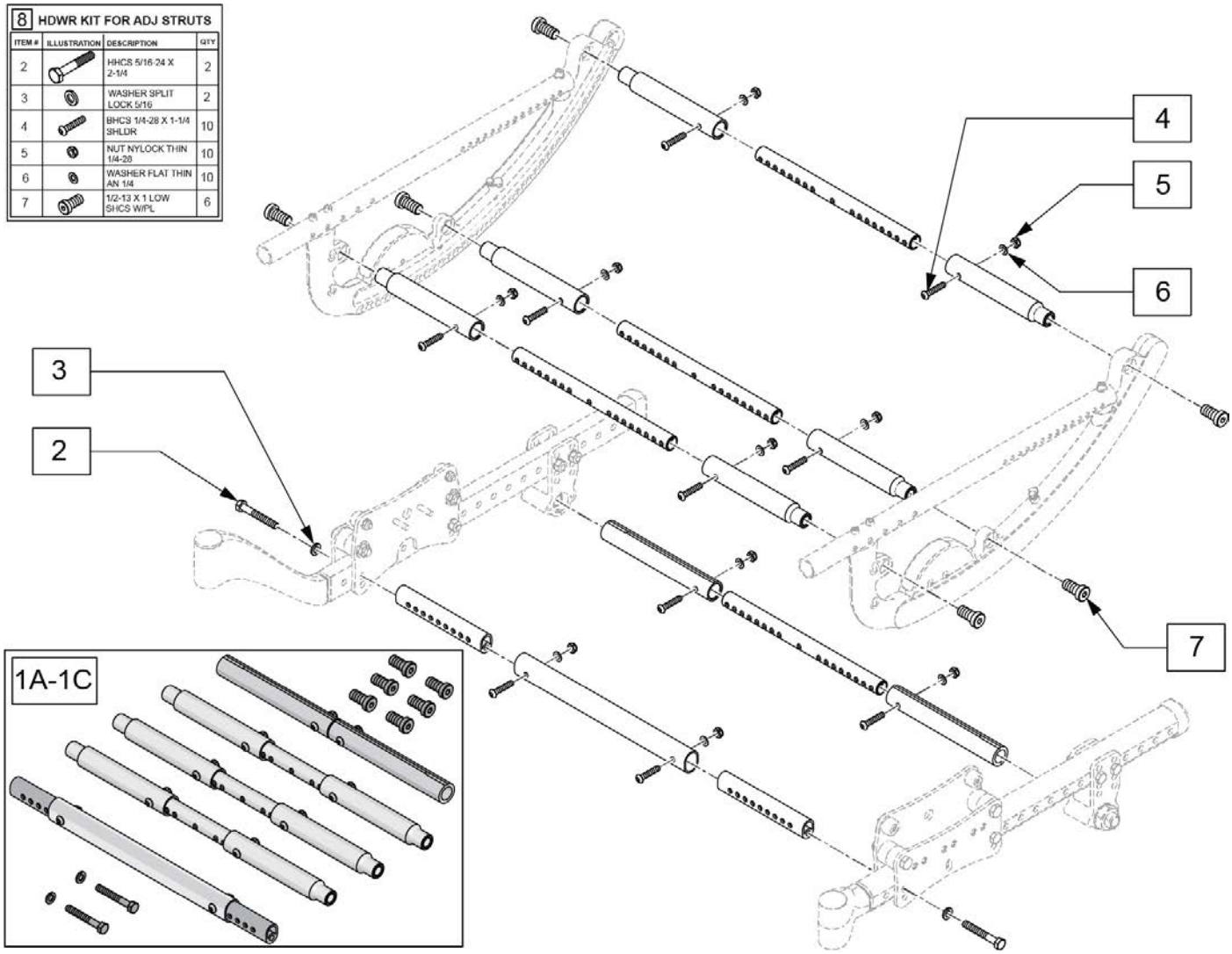

Pos.	Item Number	Description	Remarks
1A	129591	14-19 ADJ STRUT KIT W/HDWR	14-19 wide
1B	129592	15-22 ADJ STRUT KIT W/HDWR	15-22 wide
1C	163892	14-22 HD ADJ STRUT KIT W/HDWR	14-22 Heavy Duty
2	106986	HHCS 5/16-24 X 2-1/4	
3	106951	WASHER SPLIT LOCK 5/16	
4	107027	BHCS 1/4-28 X 1-1/4 SHLDR	
5	106935	NUT NYLOCK THIN 1/4-28	
6	106944	WASHER FLAT THIN AN 1/4 ROHS	
7	105888	1/2-13 X 1 LOW SHCS W/PL	
8	129593	HDWR KIT FOR ADJ STRUTS	Hardware for all 5 struts

MEASURING GUIDE

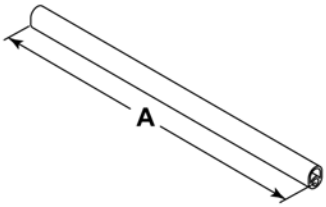

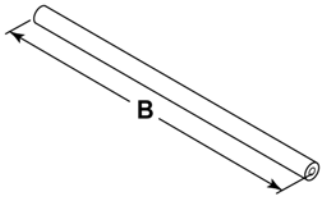

ITEM 1 DESCRIPTION	DIM "A"
STRUT TUBE KIT 14" WIDE	11 1/2
STRUT TUBE KIT 15" WIDE	12 1/2
STRUT TUBE KIT 16" WIDE	13 1/2
STRUT TUBE KIT 17" WIDE	14 1/2
STRUT TUBE KIT 18" WIDE	15 1/2
STRUT TUBE KIT 19" WIDE	16 1/2
STRUT TUBE KIT 20" WIDE	17 1/2
STRUT TUBE KIT 21" WIDE	18 1/2
STRUT TUBE KIT 22" WIDE	19 1/2

ITEM 2 DESCRIPTION	DIM "B"
STRUT ROCKER 14" W	12 3/4
STRUT ROCKER 15" W	13 3/4
STRUT ROCKER 16" W	14 3/4
STRUT ROCKER 17" W	15 3/4
STRUT ROCKER 18" W	16 3/4
STRUT ROCKER 19" W	17 3/4
STRUT ROCKER 20" W	18 3/4
STRUT ROCKER 21" W	19 3/4
STRUT ROCKER 22" W	20 3/4

ITEM 3 DESCRIPTION	DIM "C"
STRUT AXLE 10W	10 1/4
STRUT AXLE 11W	11 1/4
STRUT AXLE 12W	12 1/4
STRUT AXLE 13W	13 1/4
STRUT AXLE 14W	14 1/4
STRUT AXLE 15W	15 1/4
STRUT AXLE 16W	16 1/4
STRUT AXLE 17W	17 1/4
STRUT AXLE 18W	18 1/4
STRUT AXLE 19W	19 1/4
STRUT AXLE 20W	20 1/4
STRUT AXLE 21W	21 1/4
STRUT AXLE 22W	22 1/4

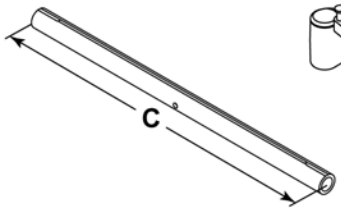

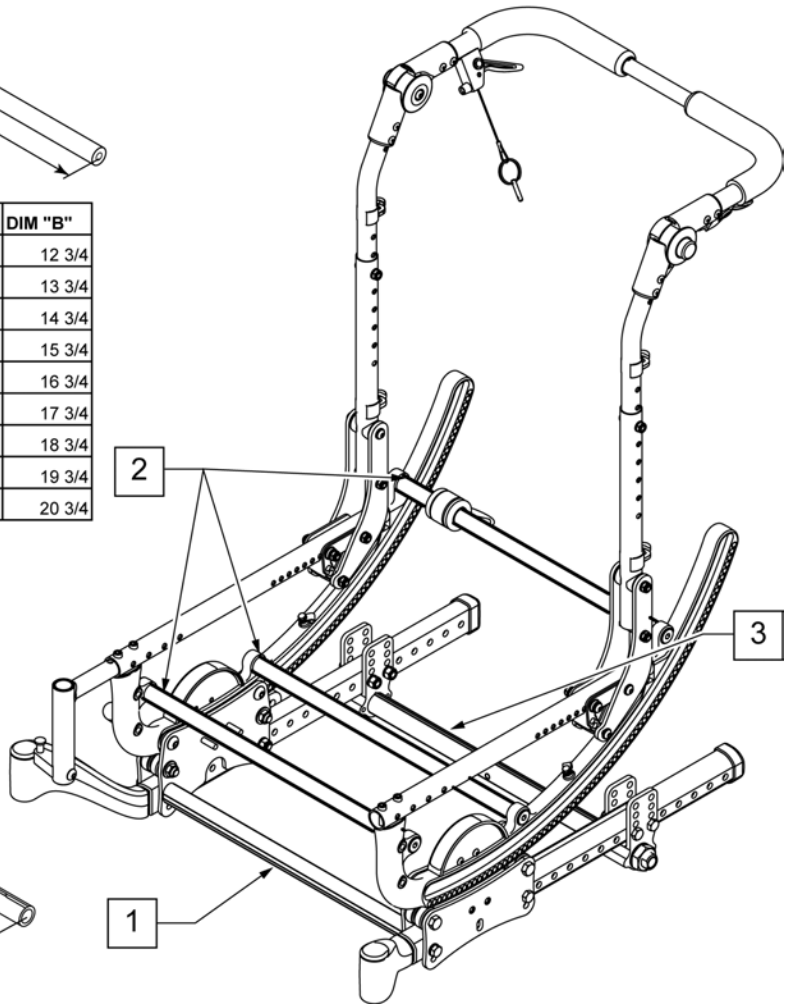

Pos.	Item Number	Description	Remarks
>>>>		14" WIDE	
1-3	108222	STRUT GROWTH KIT 14"	SEE NOTE 3
1	108192	STRUT TUBE KIT 14"	CONTAINS 1 STRUT TUBE
2	108180	STRUT ROCKER KIT 14"	CONTAINS 3 ROCKER STRUTS
3	105836-001	STRUT AXLE 14"	CONTAINS 1 AXLE STRUT
>>>>		15" WIDE	
1-3	108223	STRUT GROWTH KIT 15"	SEE NOTE 3
1	108193	STRUT TUBE KIT 15"	CONTAINS 1 STRUT TUBE
2	108181	STRUT ROCKER KIT 15"	CONTAINS 3 ROCKER STRUTS
3	105836-002	STRUT AXLE 15"	CONTAINS 1 AXLE STRUT
>>>>		16" WIDE	
1-3	108224	STRUT GROWTH KIT 16"	SEE NOTE 3
1	108194	STRUT TUBE KIT 16"	CONTAINS 1 STRUT TUBE
2	108182	STRUT ROCKER KIT 16"	CONTAINS 3 ROCKER STRUTS
3	105836-003	STRUT AXLE 16"	CONTAINS 1 AXLE STRUT
>>>>		17" WIDE	
1-3	108225	STRUT GROWTH KIT 17"	SEE NOTE 3
1	108195	STRUT TUBE KIT 17"	CONTAINS 1 STRUT TUBE

Pos.	Item Number	Description	Remarks
2	108183	STRUT ROCKER KIT 17"	CONTAINS 3 ROCKER STRUTS
3	105836-004	STRUT AXLE 17"	CONTAINS 1 AXLE STRUT
>>>>		18" WIDE	
1-3	108226	STRUT GROWTH KIT 18"	SEE NOTE 3
1	108196	STRUT TUBE KIT 18"	CONTAINS 1 STRUT TUBE
2	108184	STRUT ROCKER KIT 18"	CONTAINS 3 ROCKER STRUTS
3	105836-005	STRUT AXLE 18"	CONTAINS 1 AXLE STRUT
>>>>		19" WIDE	
1-3	108227	STRUT GROWTH KIT 19"	SEE NOTE 3
1	108197	STRUT TUBE KIT 19"	CONTAINS 1 STRUT TUBE
2	108185	STRUT ROCKER KIT 19"	CONTAINS 3 ROCKER STRUTS
3	105836-006	STRUT AXLE 19"	CONTAINS 1 AXLE STRUT
>>>>		20" WIDE	
1-3	108228	STRUT GROWTH KIT 20"	SEE NOTE 3
1	108198	STRUT TUBE KIT 20"	CONTAINS 1 STRUT TUBE
2	108186	STRUT ROCKER KIT 20"	CONTAINS 3 ROCKER STRUTS
3	105836-007	STRUT AXLE 20"	CONTAINS 1 AXLE STRUT
>>>>		21" WIDE	
1-3	108229	STRUT GROWTH KIT 21"	SEE NOTE 3
1	108199	STRUT TUBE KIT 21"	CONTAINS 1 STRUT TUBE
2	108187	STRUT ROCKER KIT 21"	CONTAINS 3 ROCKER STRUTS
3	105836-008	STRUT AXLE 21"	CONTAINS 1 AXLE STRUT
>>>>		22" WIDE	
1-3	108230	STRUT GROWTH KIT 22"	SEE NOTE 3
1	108200	STRUT TUBE KIT 22"	CONTAINS 1 STRUT TUBE
2	108188	STRUT ROCKER KIT 22"	CONTAINS 3 ROCKER STRUTS
3	105836-009	STRUT AXLE 22"	CONTAINS 1 AXLE STRUT
>>>>		COMPLETE GROWTH PACKAGE	
1-3	108231	14 -22" GROWTH PACKAGE	CONTAINS 1 OF EACH WIDTH STRUT GROWTH KIT.

Note: Fits Chairs w/serial # prefix IRS or IRSE only.

Note: 2 Strut Tubes (item 1) are used for HD option.

Note: Strut Tube Growth Kit contains (2) Strut Tubes, (3) Rocker Struts and (1) Axle Strut.

[01/18/2021]TRANSIT KIT WC19 after S/N IRS-045100 & IRSE-057300 & S/N ZRS-041800 & ZRSE-051100

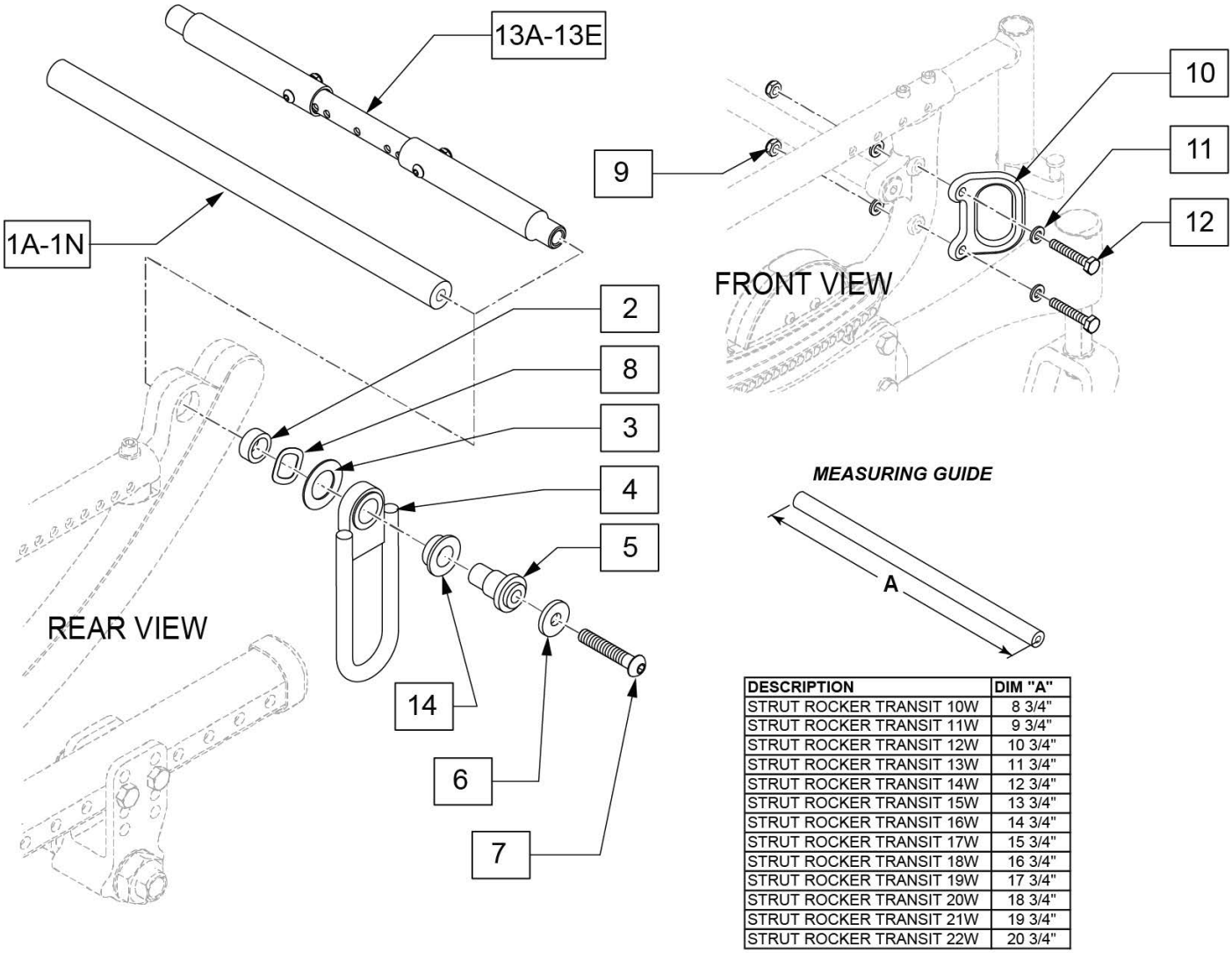

DESCRIPTION	DIM "A"
STRUT ROCKER TRANSIT 10W	8 3/4"
STRUT ROCKER TRANSIT 11W	9 3/4"
STRUT ROCKER TRANSIT 12W	10 3/4"
STRUT ROCKER TRANSIT 13W	11 3/4"
STRUT ROCKER TRANSIT 14W	12 3/4"
STRUT ROCKER TRANSIT 15W	13 3/4"
STRUT ROCKER TRANSIT 16W	14 3/4"
STRUT ROCKER TRANSIT 17W	15 3/4"
STRUT ROCKER TRANSIT 18W	16 3/4"
STRUT ROCKER TRANSIT 19W	17 3/4"
STRUT ROCKER TRANSIT 20W	18 3/4"
STRUT ROCKER TRANSIT 21W	19 3/4"
STRUT ROCKER TRANSIT 22W	20 3/4"

Pos.	Item Number	Description	Remarks
1A	126494	STRUT ROCKER TRANSIT 10W	For Zippie IRIS only; used for Fixed Wdith Strut System
1B	126495	STRUT ROCKER TRANSIT 11W	For Zippie IRIS only; used for Fixed Wdith Strut System
1C	126496	STRUT ROCKER TRANSIT 12W	For Zippie IRIS only; used for Fixed Wdith Strut System
1D	126497	STRUT ROCKER TRANSIT 13W	For Zippie IRIS only; used for Fixed Wdith Strut System
1E	126498	STRUT ROCKER TRANSIT 14W	used for Fixed Wdith Strut System
1F	126499	STRUT ROCKER TRANSIT 15W	used for Fixed Wdith Strut System
1G	126500	STRUT ROCKER TRANSIT 16W	used for Fixed Wdith Strut System
1H	126501	STRUT ROCKER TRANSIT 17W	used for Fixed Wdith Strut System
1I	126502	STRUT ROCKER TRANSIT 18W	used for Fixed Wdith Strut System
1J	126503	STRUT ROCKER TRANSIT 19W	For Quickie IRIS only; used for Fixed Wdith Strut System
1K	126504	STRUT ROCKER TRANSIT 20W	For Quickie IRIS only; used for Fixed Wdith Strut System
1L	126505	STRUT ROCKER TRANSIT 21W	For Quickie IRIS only; used for Fixed Wdith Strut System
1M	126506	STRUT ROCKER TRANSIT 22W	For Quickie IRIS only; used for Fixed Wdith Strut System
1N	245474	STRUT ROCKER TRANSIT 23W	For Quickie IRIS only; used for Fixed Wdith Strut System
1O	245475	STRUT ROCKER TRANSIT 24W	For Quickie IRIS only; used for Fixed Wdith Strut System
7	129788	BHCS 5/16-18 X 2 1/4 BLK W PL	
8	128988	WAVE WASHER 3/4"	See note
9	106935	NUT NYLOCK THIN 1/4-28 ROHS	

Pos.	Item Number	Description	Remarks
11	106943	WASHER FLAT AN 1/4 ROHS	
12	106972	HHCS 1/4-28 X 1-1/2 ROHS	
2-12,14	129603	TILT TRANSIT KIT W/O STRUT	order correct strut above to complete kit
13A	129604	14W TRANSIT ADJ STRUT KIT STD	Quickie IRIS, 14-19" wide; used for the Width Adjusting System
13B	129605	15-21 TRANSIT ADJ STRUT KIT STD	Quickie IRIS, 15-22" wide; used for the Width Adjusting System
13C	129606	10-13 W TRANSIT ADJ STRUT KIT PED	Zippie IRIS, 10-13" wide; used for the Width Adjusting System
13D	129607	14W TRANSIT ADJ STRUT KIT PED	Zippie IRIS, 14" wide; used for the Width Adjusting System
13E	129608	15-18 TRANSIT ADJ STRUT KIT PED	Zippie IRIS, 15-18" wide; used for the Width Adjusting System

Note: order qty 1 of correct size Transit Strut (13A-13E) and qty 1 of Transit Kit (p/n 129603).

Note: Transit Option not available with Drop Seat, O2 Holder, or IV Holder.

Note: if retrofitting Transit Kit to an existing chair with Heavy Duty option then 8 x 2 casters and forks are required.

Note: ensure Position 8 wave washer is centered when installed; see Informations Panel for instruction sheet for more detail.

[12/2011] TRANSIT KIT IRIS prior to S/N IRS-045100 & IRSE-057300 & S/N ZRS-041800 & ZRSE-051100

NOTE: Transit Option not available with Drop Seat, Heavy Duty option (with casters other than 8 x 2), or O2 or IV Holder.

NOTE: if retrofitting Transit Kit to an existing chair with Heavy Duty option then 8 x 2 casters and forks are required.

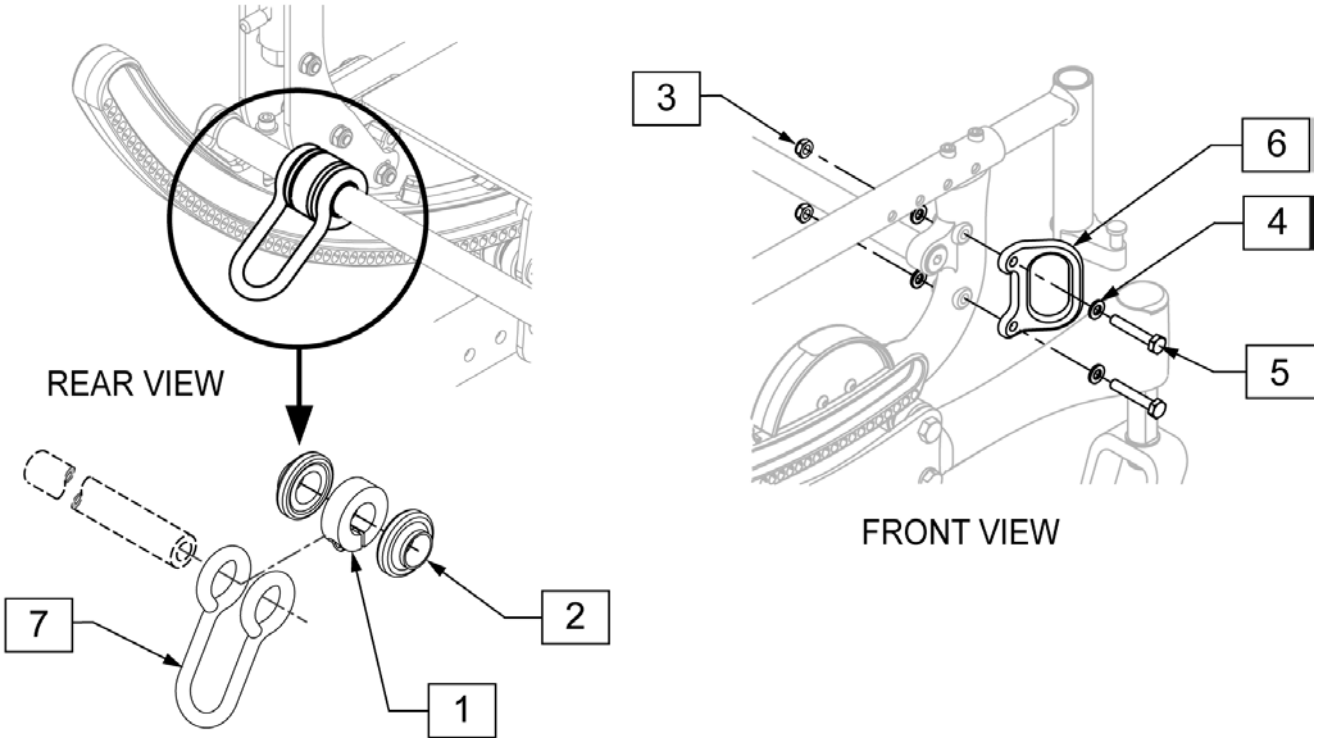

Pos.	Item Number	Description
1	105865	CLAMP SHAFT 3/4"
2	108765	BUSHING TRANSIT REAR
3	106935	NUT NYLOCK THIN 1/4-28 ROHS
4	106943	WASHER FLAT AN 1/4 ROHS
5	106972	HHCS 1/4-28 X 1-1/2 ROHS
1-7	109322S	TRANSIT KIT IRIS S/N PREFIX IRS

FOOT RELEASE QUICKIE IRIS

[08/26/2019]

NOTE: See attached FOOT PEDAL MOUNTING GUIDE.pdf for mounting position.

NOTE: Item 9 is included with chair at time of purchase but is not mounted.

NOTE: Foot Release Extension is used with S/N prefix chairs IRS and IRSE only.

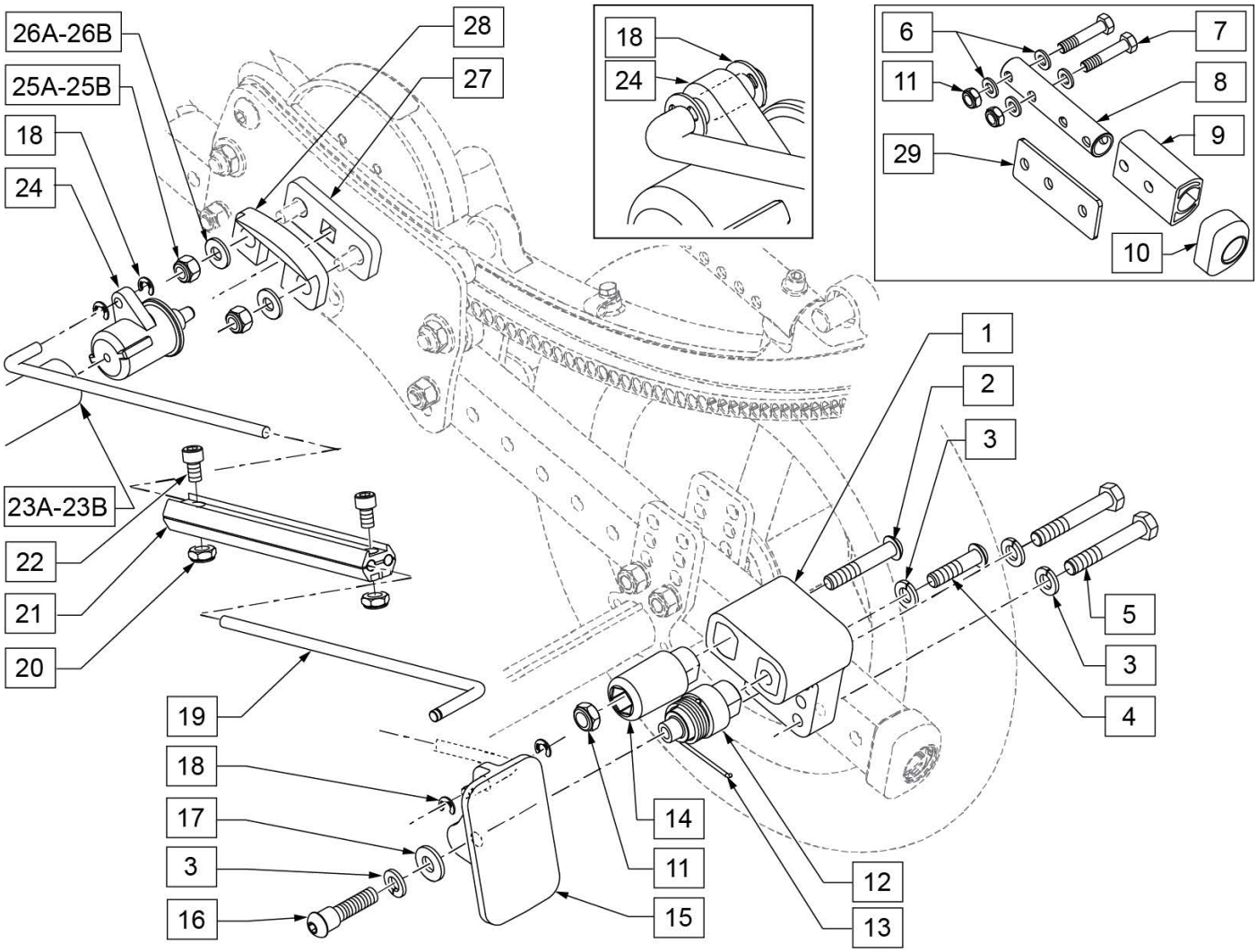

Pos.	Item Number	Description	Remarks
1	107242	BLOCK MOUNT FOOT RELEASE	
2	106982	BHCS 5/16 -18 x 1 3/4" SHLD ROHS	
3	106951	WASHER SPLIT LOCK 5/16" ROHS	
4	106980	BHCS 5/16 -18 x 1 1/4" ROHS	
5	106985	HHCS 5/16 -24 x 2" ROHS	
6	106946	WASHER FLAT AN 5/16" ROHS	

Pos.	Item Number	Description	Remarks
7	107358	HHCS 5/16 -18 x 1 1/2 ROHS	
8	107164	TUBE ADAPTER FOOT RELEASE	
9	107178	TUBE EXTENSION FOOT RELEASE	Black only
10	105809	CAP TUBE BASE	
11	202117	5/16-18 NYLOCK NUT THICK BLK	
12	106377	SHAFT PIVOT PEDAL	
13	106668	TORSION SPRING RH	RIGHT
13	106989	TORSION SPRING LH	LEFT
14	107167	POST STOP FOOT RELEASE	
15	107165	PEDAL FOOT RELEASE	
16	106979	BHCS 5/16 -18 x 3/4 ROHS	
17	263109	5/16" FENDER WASHER SS 3/4" OD	
18	106383	E-CLIP 3/16"	
19	107180	ROD LINKAGE FOOT RELEASE	
20	106931	NUT NYLOCK THIN 10 -32 ROHS	
21	107179	CLAMP LINKAGE FOOT RELEASE	
22	107181	SHCS 10 -32 x 1/2 ROHS	
23A	107239	ROCKER TUBE ASSM 13 -18"	13 -18" WIDE
23B	107240	ROCKER TUBE ASSM 15 -22"	15 -22" WIDE
18,24,27	108767	PIN RELEASE REPLACEMENT	Includes Left & Right
25A	106932	NUT NYLOCK 1/4 -20 ROHS	USED FOR CHAIRS W/ SN# Prefix IRS or ISE.
25B	201105	NUT NYLOCK THIN 1/4 -20 ROHS	USED FOR CHAIRS W/ SN# Prefix CGT.
26A	106945	WASHER FLAT SAE 1/4 ROHS	USED FOR CHAIRS W/ SN# Prefix IRS or ISE.
26B	106944	WASHER FLAT THIN AN 1/4 ROHS	USED FOR CHAIRS W/ SN# Prefix CGT.
28	118929	RETAINER ACTUATOR HOUSING	
29	108795	TUBE EXTENSION PLATE	
6-11,29	108615	FOOT RELEASE FRAME EXT.	Black only-not used for chairs w/ SN# Prefix CGT.
19 -22	108577	FOOT RELEASE LINKAGE ASSM	
1-4,11-17 *	112402	IRIS Z FOOT PEDAL ASSM R UP	RIGHT UP
1-4,11-17 *	112403	IRIS Z FOOT PEDAL ASSM L UP	LEFT UP
1-4,11-17 *	112404	IRIS Z FOOT PEDAL ASSM R DOWN	RIGHT DOWN
1-4,11-17 *	112405	IRIS Z FOOT PEDAL ASSM L DOWN	LEFT DOWN
1-29 *	116005	FOOT RELEASE KIT 14 -22 UP R	RIGHT UP -FITS S/N PREFIXS IRS, IRSE & CGT
1-29 *	116006	FOOT RELEASE KIT 14 -22 UP L	LEFT UP -FITS S/N PREFIXS IRS, IRSE & CGT
1-29 *	116007	FOOT RELEASE KIT 14 -22 DOWN R	RIGHT DOWN -FITS S/N PREFIXS IRS, IRSE & CGT
1-29 *	116008	FOOT RELEASE KIT 14 -22 DOWN L	LEFT DOWN -FITS S/N PREFIXS IRS, IRSE & CGT

TILT HANDLE & CABLE FOR STROLLER HANDLE & RECLINING BACKREST [09/10/2019]

Note: see attachment in Informations Panel for cable installation instructions.

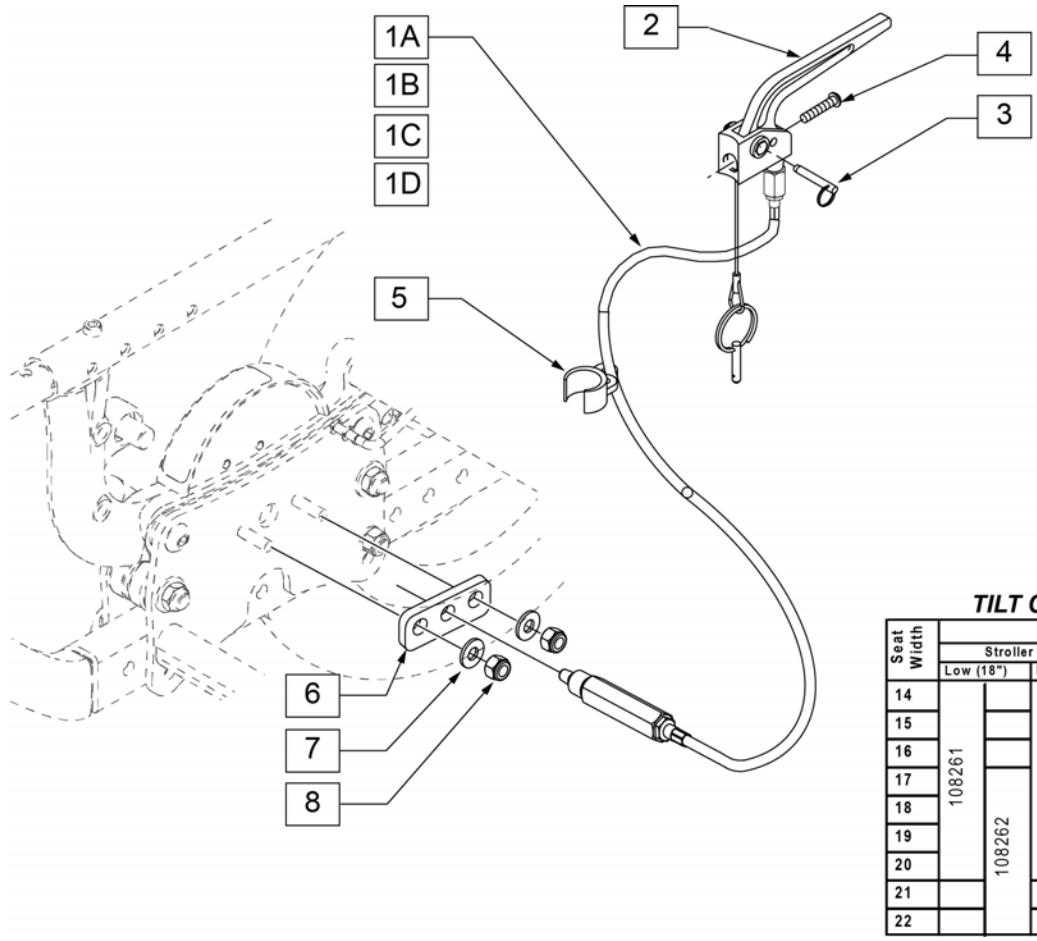

QUICKIE IRIS
TILT CABLE REFERENCE GUIDE

Seat Width	Backrest									
	Stroller Handle Backpost						Reclining Backrest			
	Low (18")		Med (21")		Tall (24")		Medium		Tall	
14	108261		108262		108263		108262		108263	
15										
16										
17		108262		108263		108264		108263		108264
18										
19										
20										
21										
22										

Pos.	Item Number	Description	Remarks
2,3	580110	CYL LOCK LEVER ASSM QT/QR/P5	
4	281120	10/32 x 5/8 PAN HD PHIL	
5	108134	CLIP CABLE 1" (10)	PACK OF 10
6	500698	PLATE PLUNGER ROLLER	
7	106945	WASHER FLAT SAE 1/4 ROHS	
8	106932	NUT NYLOCK 1/4 -20 ROHS	
1A-8	108261	PH MNT CABLE ASM SHT	51" LONG (SHORT)
1B-8	108262	PH MNT CABLE ASM MED	54" LONG (MEDIUM)
1C-8	108263	PH MNT CABLE ASM LONG	57" LONG (LONG)
1D-8	108264	PH MNT CABLE ASM X LONG	60" LONG (X-LONG)

TILT HANDLE & CABLE FOR HGT ADJ BACKREST

Note: see attachment in Informations Panel for cable installation instructions.

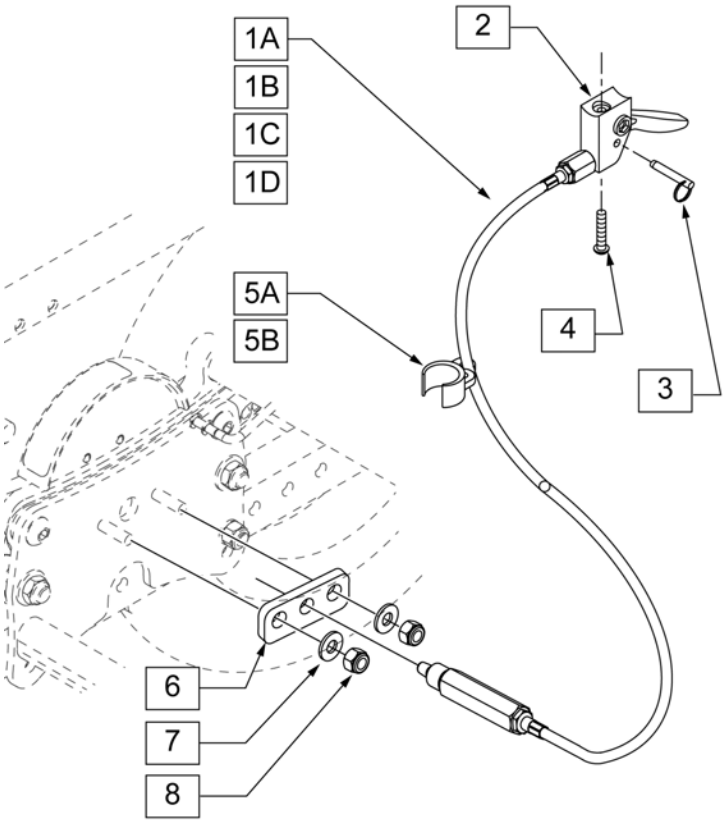

QUICKIE IRIS
TILT CABLE REFERENCE GUIDE

Seat Width	Backrest					
	Height Adj (Short or Long Push Handles)					
	Standard (15"-21")			Tall (18"-24")		
14	108269			108270		
15						
16		108270			108271	
17						
18			108271			
19						108272
20						
21						
22						

Pos.	Item Number	Description	Remarks
2,3	580109	PLUNGER PIN LEVER ASSM	
4	281120	10/32 x 5/8 PAN HD PHIL	
5A	108134	CLIP CABLE 1" (10)	PACK OF 10
5B	108135	CLIP CABLE 7/8" (10)	PACK OF 10
6	500698	PLATE PLUNGER ROLLER	
7	106945	WASHER FLAT SAE 1/4 ROHS	
8	106932	NUT NYLOCK 1/4 -20 ROHS	
1A-8	108269	HGT ADJ MNT CABLE ASM LNG	57" LONG (LONG)
1B-8	108270	HGT ADJ MNT CABLE ASM XL	60" LONG (X-LONG)
1C-8	108271	HGT ADJ MNT CABLE ASM 2XL	63" LONG (2XL-LONG)
1D-8	108272	HGT ADJ MNT CABLE ASM 3XL	66" LONG (3XL-LONG)

Wheel Type	Axle Type		Axle P/N	Spacer P/N
6 Spoke Mag Wheels	Quick Release	1A 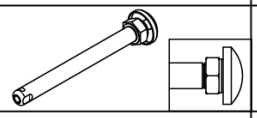	102063 A=4 1/8	N/A
	Quad Quick Release	1B 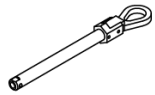	922171 A=4 1/8	N/A
12” & 16” 3 Spoke Mag Wheels	Quick Release	1A 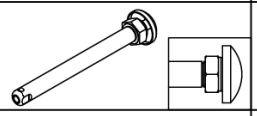	102063 A=4 1/8	N/A
	Quad Quick Release	1B 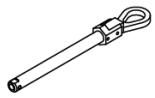	922171 A=4 1/8	N/A
Standard Spoke	Quick Release	1C 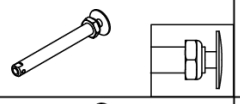	102064 “A”= 4 1/2	N/A
Lite Spoke Wheels	Quick Release	1D 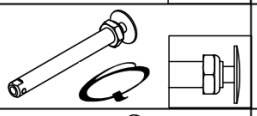	107268 A=4 1/4	N/A
Mag Wheels w/ Hub Locks	Quick Release	1E 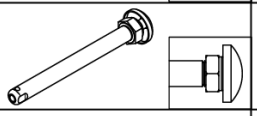	102063 “A”= 4 1/8	N/A
	Quad Quick Release	1F 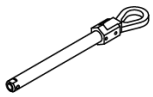	116390 A=4 1/8	N/A
5 Spoke Mag Wheels	Quick Release	1G 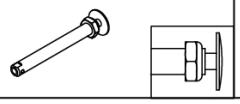	109385 A=4 1/2	N/A

Quick Release Measuring Guide

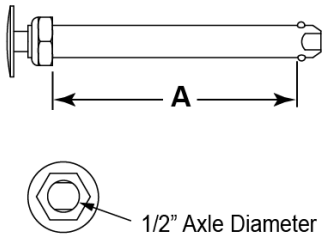

Pos.	Item Number	Description
1A	102063	QR AXLE MAG W/M-12 NUT
1B	920171	QR AXLE MAG W/QUAD NUT
1C	109385	QR AXLE/NUT LONG BG BTTN
1D	107268	QR AXLE AND NUT SHORT BIG BUTTON
1E	102063	QR AXLE MAG W/M-12 NUT
1F	116390	QUAD RELEASE AXLE
1G	109385	QR AXLE/NUT LONG BT BTTN

AXLE BRACKETS

NOTE: Fits Quickie Iris chairs w/ S/N Prefix IRS & IRSE only; Fits Zippie Iris chairs w/ S/N Prefix ZRS & ZRSE only.

NOTE: Standard Axle Plates and Axle Plates used with the Vent/Battery Tray are different; if adding a Vent/Battery Tray or removing it, the Axle Plates must be changed and item 8 is not used with the Vent/Battery Tray.

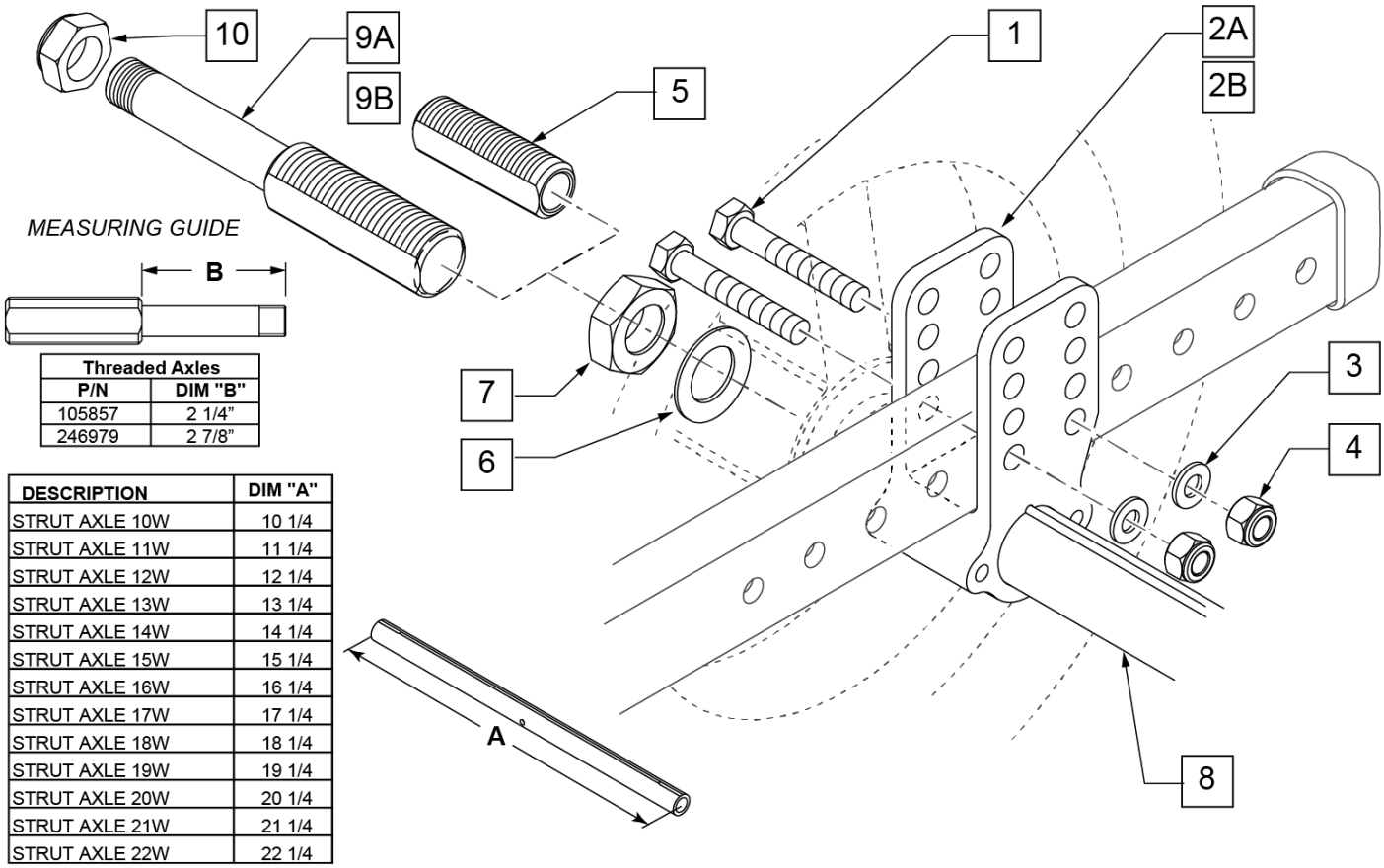

Threaded Axles	
P/N	DIM "B"
105857	2 1/4"
246979	2 7/8"

DESCRIPTION	DIM "A"
STRUT AXLE 10W	10 1/4
STRUT AXLE 11W	11 1/4
STRUT AXLE 12W	12 1/4
STRUT AXLE 13W	13 1/4
STRUT AXLE 14W	14 1/4
STRUT AXLE 15W	15 1/4
STRUT AXLE 16W	16 1/4
STRUT AXLE 17W	17 1/4
STRUT AXLE 18W	18 1/4
STRUT AXLE 19W	19 1/4
STRUT AXLE 20W	20 1/4
STRUT AXLE 21W	21 1/4
STRUT AXLE 22W	22 1/4

Pos.	Item Number	Description	Remarks
1	106985	HHCS 5/16 -24 x 2 ROHS	
2A	105837	AXLE PLATE STANDARD R	RIGHT
2A	105838	AXLE PLATE STANDARD L	LEFT
2B	105879	AXLE PLATE VBT	Used with Vent and Battery Tray only
3	106946	WASHER FLAT AN 5/16 ROHS	
4	106938	NUT NYLOCK 5/16 -24 ROHS	
5	481065	AXLE SLEEVE S.S.	
6	116570	WASHER FLAT 3/4 X 1.25 BLK ZNC	
7	116569	NUT HEX 3/4-16 BLACK ZINC	
8	105836-010	STRUT AXLE 10"	Fits Zippie Iris only
8	105836-011	STRUT AXLE 11"	Fits Zippie Iris only
8	105836-012	STRUT AXLE 12"	Fits Zippie Iris only
8	105836-013	STRUT AXLE 13"	Fits Zippie Iris only
8	105836-001	STRUT AXLE 14"	
8	105836-002	STRUT AXLE 15"	

Pos.	Item Number	Description	Remarks
8	105836-003	STRUT AXLE 16"	
8	105836-004	STRUT AXLE 17"	
8	105836-005	STRUT AXLE 18"	
8	105836-006	STRUT AXLE 19"	Fits Quickie Iris only
8	105836-007	STRUT AXLE 20"	Fits Quickie Iris only
8	105836-008	STRUT AXLE 21"	Fits Quickie Iris only
8	105836-009	STRUT AXLE 22"	Fits Quickie Iris only
9A	105857	AXLE THREADED	Fits Mag Wheels: 12" & 16" (3 Spoke); 20", 22", & 24" (6 Spoke)
9B	246979	5 SPOKE MAG THREAD AXLE	
10	106940	NUT NYLOCK THIN 1/2 -20 ROHS	
1,2A,3,4,9A,10	108177	AXLE BRKT THREADED ASSM R	RIGHT-Threaded Axle
1,2A,3,4,9A,10	108178	AXLE BRKT THREADED ASSM L	LEFT-Threaded Axle
1,2A,3-7	108175	AXLE BRKT QR ASSM R	RIGHT-Quick Release Axle
1,2A,3-7	108176	AXLE BRKT QR ASSM L	LEFT-Quick Release Axle
5-7	108616	QR AXLE SLEEVE KIT	
7,9A	108617	THREADED AXLE SLEEVE KIT	
1,2B,3,4,9A,10	108292	AXLE PLATE VBT ASSM THREADED	Threaded Axle Plate for Vent/Battery Tray only
1,2B,3-7	108291	AXLE PLATE VBT ASSM QR	Quick Release Axle Plate for Vent/Battery Tray only

ONE-ARM DRIVE (S/N Preifx IRS or IRSE only)

NOTE: REFER TO REAR WHEEL SECTION FOR REPLACEMENT MAG WHEELS.

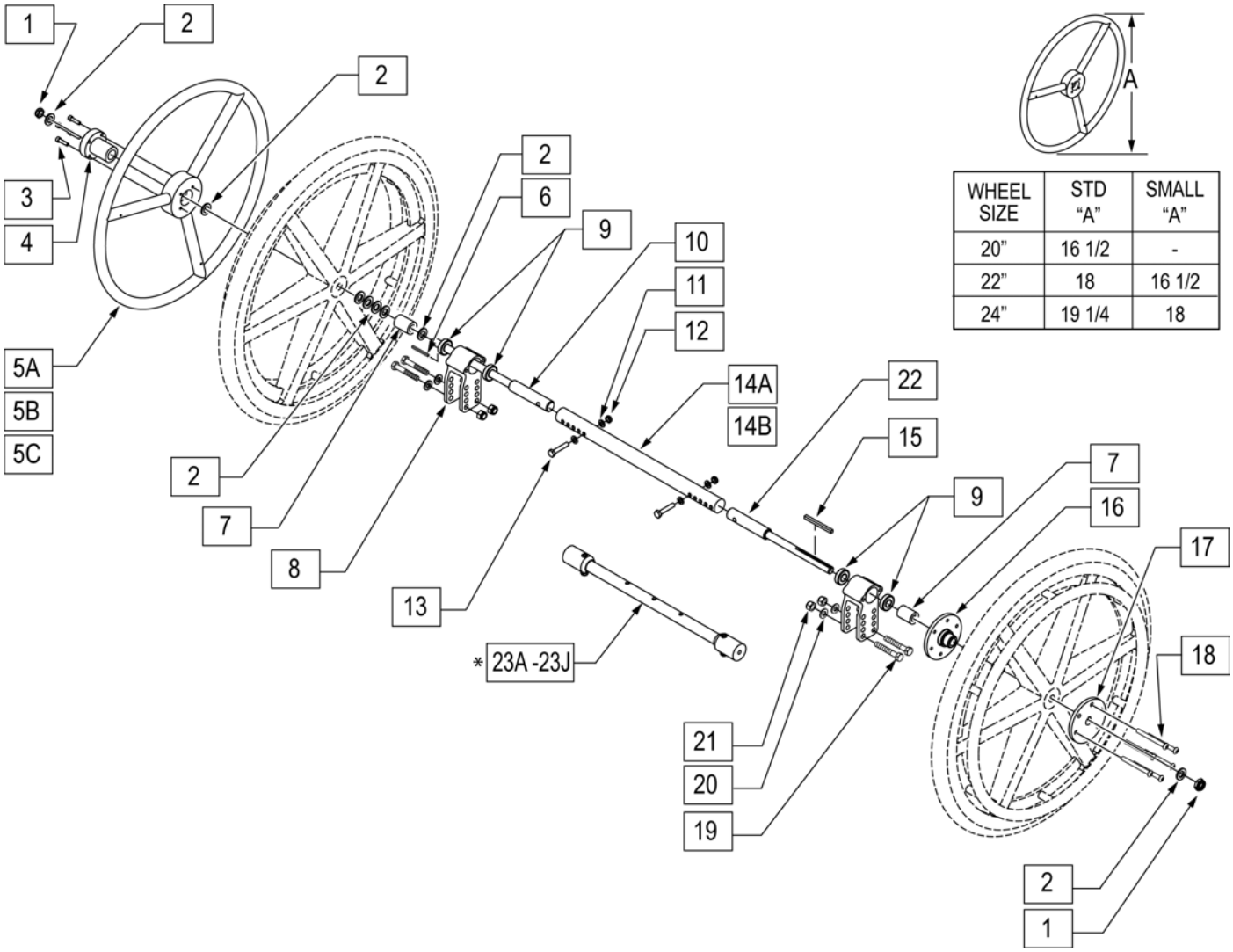

WHEEL SIZE	STD "A"	SMALL "A"
20"	16 1/2	-
22"	18	16 1/2
24"	19 1/4	18

Pos.	Item Number	Description	Pos.	Item Number	Description
1	106940	NUT NYLOCK THIN 1/2 -20 ROHS	12	106935	NUT NYLOCK THIN 1/4 -28 ROHS
2	106949	WASHER FLAT AN 1/2 ROHS	13	106971	HHCS 1/4 -28 x 1 3/8 ROHS
3	106956	SHCS 10 -32 x 3/4 ROHS	14A	105856-001	TUBE STRUT 1 AD 14 -18"
4	106691	HAND RING HUB	14B	105856-002	TUBE STRUT 1 AD 18 -22"
5A	529800	1AD HANDRIM ONLY 22" STD/24" SM	15	341277	3/16" SQ x 2 3/8 KEY STL
5B	529801	1AD HANDRIM ONLY 20" STD/22" SM	16	500631	WHEEL HUB 1 ARM DRIVE W/ TAP
5C	529802	1AD HANDRIM ONLY 24" STD	17	500630	1 AD WHEEL HUB W/O TAP
6	341274	3/16 SQ x 1 1/2 KEY STL	18	106967	BHCS 1/4 -28 x 2 1/2 SHLDR ROHS
7	483320	WHEEL SPACER CGTS	19	106985	HHCS 5/16 -24 x 2 ROHS
8	105855	AXLE PLATE 1 AD	20	106946	WASHER FLAT AN 5/16 ROHS
9	349500	1 1/8 x 1/2 BEARING	21	106938	NUT NYLOCK 5/16 -24 ROHS
8,9	108576	AXLE PLATE ASSM 1AD	22	050534-001	SHAFT DRIVE HANDRIM 1AD
10	050534-002	SHAFT DRIVE WHEEL 1AD	23A	115976	VENT STRUT ASSM 14" W
11	106943	WASHER FLAT AN 1/4 ROHS	23B	115977	VENT STRUT ASSM 15" W

Pos.	Item Number	Description	Pos.	Item Number	Description
23C	108579	VENT STRUT ASSM 16" W	1-5B, 6 -23B	115988	1AD RTRO 20/22 KIT IRIS 15W
23D	108580	VENT STRUT ASSM 17" W	1-5B, 6 -23C	115989	1AD RTRO 20/22 KIT IRIS 16W
23E	108581	VENT STRUT ASSM 18" W	1-5B, 6 -23D	115990	1AD RTRO 20/22 KIT IRIS 17W
23F	108582	VENT STRUT ASSM 19" W	1-5B, 6 -23E	115991	1AD RTRO 20/22 KIT IRIS 18W
23G	108583	VENT STRUT ASSM 20" W	1-5B, 6 -23F	115992	1AD RTRO 20/22 KIT IRIS 19W
23H	108584	VENT STRUT ASSM 21" W	1-5B, 6 -23G	115993	1AD RTRO 20/22 KIT IRIS 20W
23J	108585	VENT STRUT ASSM 22" W	1-5B, 6 -23H	115994	1AD RTRO 20/22 KIT IRIS 21W
1-5A, 6 -23A	115978	1AD RTRO 22/24 KIT IRIS 14W	1-5B, 6 -23J	115995	1AD RTRO 20/22 KIT IRIS 22W
1-5A, 6 -23B	115979	1AD RTRO 22/24 KIT IRIS 15W	1-5C, 6 -23A	115996	1AD RTRO 24 KIT IRIS 14W
1-5A, 6 -23C	115980	1AD RTRO 22/24 KIT IRIS 16W	1-5C, 6 -23B	115997	1AD RTRO 24 KIT IRIS 15W
1-5A, 6 -23D	115981	1AD RTRO 22/24 KIT IRIS 17W	1-5C, 6 -23C	115998	1AD RTRO 24 KIT IRIS 16W
1-5A, 6 -23E	115982	1AD RTRO 22/24 KIT IRIS 18W	1-5C, 6 -23D	115999	1AD RTRO 24 KIT IRIS 17W
1-5A, 6 -23F	115983	1AD RTRO 22/24 KIT IRIS 19W	1-5C, 6 -23E	116000	1AD RTRO 24 KIT IRIS 18W
1-5A, 6 -23G	115984	1AD RTRO 22/24 KIT IRIS 20W	1-5C, 6 -23F	116001	1AD RTRO 24 KIT IRIS 19W
1-5A, 6 -23H	115985	1AD RTRO 22/24 KIT IRIS 21W	1-5C, 6 -23G	116002	1AD RTRO 24 KIT IRIS 20W
1-5A, 6 -23J	115986	1AD RTRO 22/24 KIT IRIS 22W	1-5C, 6 -23H	116003	1AD RTRO 24 KIT IRIS 21W
1-5B, 6 -23A	115987	1AD RTRO 20/22 KIT IRIS 14W	1-5C, 6 -23J	116004	1AD RTRO 24 KIT IRIS 22W

CASTER STEM & FORK ASSM

NOTE: FITS LXI CHAIRS W/ TRANSIT OPTION.

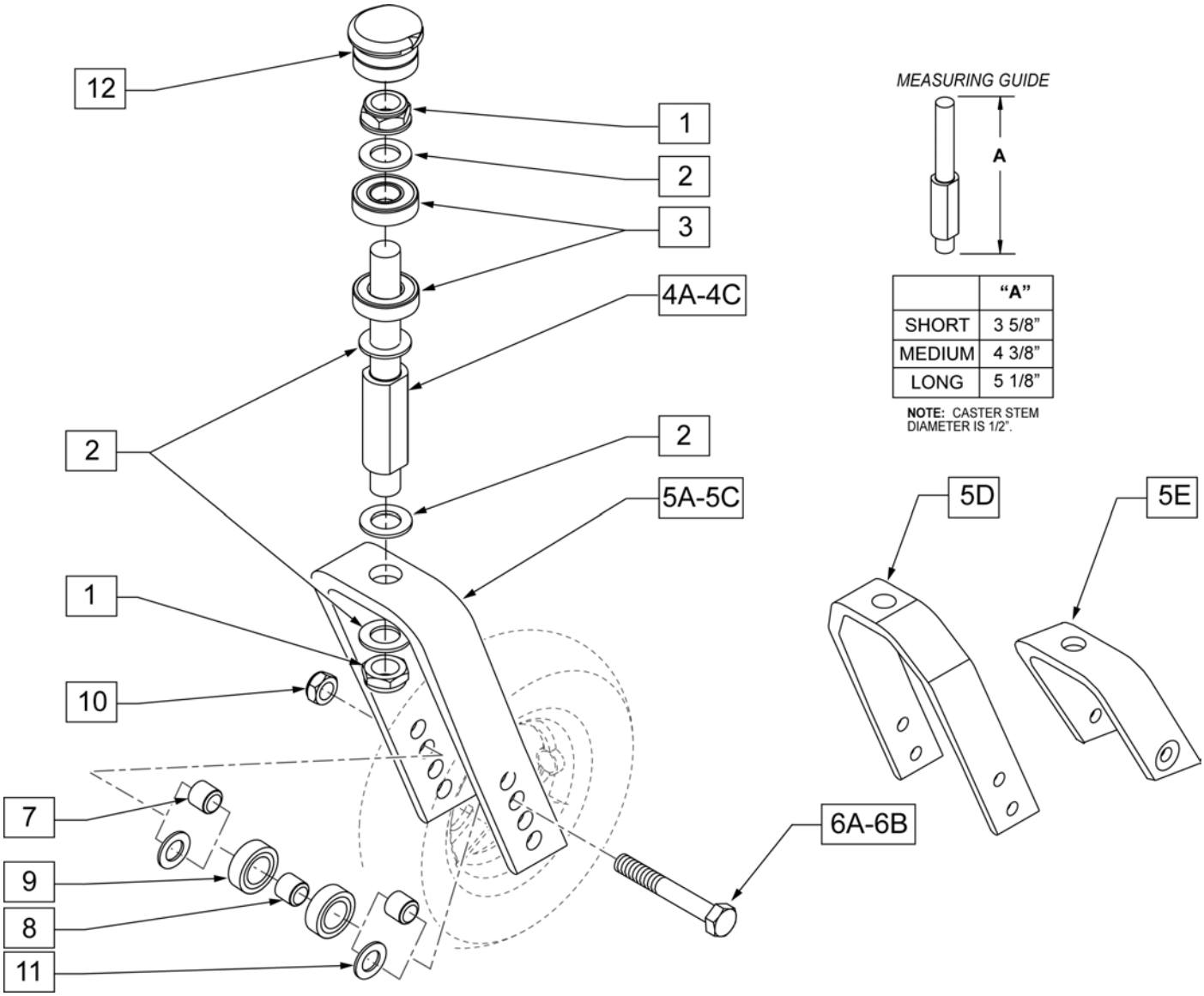

Pos.	Item Number	Description	Remarks
1	106940	NUT NYLOCK THIN 1/2 -20 ROHS	
2	106949	WASHER FLAT AN 1/2 ROHS	
3	349500	1 1/8 x 1/2 BEARING	
4A	481820	CASTER STEM SHORT CGTS	STD Caster Stem
4B	481821	CASTER STEM MEDIUM CGTS	+3/4" Caster Stem
4C	481822	CASTER STEM LONG CGTS	+1 1/2 Caster Stem
5A	105839-001	FORK CASTER 5 1/4"	WORKS W/ 4",5",6", & 8" CASTERS
5B	105839-002	FORK CASTER 6"	WORKS W/ 4",5",6", & 8" CASTERS
5C	105839-003	FORK CASTER 7"	WORKS W/ 4",5",6", & 8" CASTERS
5D	550730	8" FORK P100 ONLY	WORKS W/ 8" X 2" CASTERS ONLY
5E	106810	FORK CASTER 3"	
6A	106987	HHCS 5/16 -24 x 2 1/2 ROHS	

Pos.	Item Number	Description	Remarks
6B	106988	HHCS 5/16 -24 x 3 1/4 ROHS	Used w/ wide fork only
7	481113	SPACER 5/16 x 0.380	
8	481013	BEARING SPACER	INCLUDED W/ CASTER
9	349502	7/8 x 5/16 BEARING	INCLUDED W/ CASTER
10	106939	NUT NYLOCK THIN 5/16 -24 ROHS	
11	106946	WASHER FLAT AN 5/16 ROHS	
12	116255	CASTER CAP WITH O-RING IRIS	
1,2,4A	920592	CASTER STEM SHORT W/HDWR	STD Caster Stem
1,2,4B	920593	CASTER STEM MEDIUM W/HDWR	+3/4" Caster Stem
1,2,4C	920594	CASTER STEM LONG W/HDWR	+1 1/2 Caster Stem
1,2,4A,5A,6A,7,10	108163	FORK CASTER 5 1/4" SHORT ASSM	STD Caster Stem - WORKS W/ 4",5",6", & 8" CASTERS
1,2,4B,5A,6A,7,10	108164	FORK CASTER 5 1/4" MED ASSM	+3/4" Caster Stem - WORKS W/ 4",5",6", & 8" CASTERS
1,2,4C,5A,6A,7,10	108165	FORK CASTER 5 1/4" LONG ASSM	+1 1/2 Caster Stem - WORKS W/ 4",5",6", & 8" CASTERS
1,2,4A,5B,6A,7,10	108166	FORK CASTER 6" SHORT ASSM	STD Caster Stem - WORKS W/ 4",5",6", & 8" CASTERS
1,2,4B,5B,6A,7,10	108167	FORK CASTER 6" MED ASSM	+3/4" Caster Stem - WORKS W/ 4",5",6", & 8" CASTERS
1,2,4C,5B,6A,7,10	108168	FORK CASTER 6" LONG ASSM	+1 1/2 Caster Stem - WORKS W/ 4",5",6", & 8" CASTERS
1,2,4A,5C,6A,7,10	108169	FORK CASTER 7" SHORT ASSM	STD Caster Stem - WORKS W/ 4",5",6", & 8" CASTERS
1,2,4B,5C,6A,7,10	108170	FORK CASTER 7" MED ASSM	+3/4" Caster Stem - WORKS W/ 4",5",6", & 8" CASTERS
1,2,4C,5C,6A,7,10	108171	FORK CASTER 7" LONG ASSM	+1 1/2 Caster Stem - WORKS W/ 4",5",6", & 8" CASTERS
1,2,4A,5E,6A,7,10	108160	FORK CASTER 3" SHT ASSM	STD Caster Stem -WORKS W/ 4" CASTERS
1,2,4A,5D,6B,10,11	108172	FORK CASTER WD SHORT ASSM (8 x 2)	STD Caster Stem - FITS 8" X 2" CASTERS ONLY
1,2,4B,5D,6B,10,11	108173	FORK CASTER WD MED ASSM (8 x 2)	+3/4" Caster Stem - FITS 8" X 2" CASTERS ONLY
1,2,4C,5D,6B,10,11	108174	FORK CASTER WD LONG ASSM (8 x 2)	+1 1/2 Caster Stem - FITS 8" X 2" CASTERS ONLY

3 SPOKE CASTERS

NOTE: 7" and 8" Casters are not available with Integral Bearing Forks.

Note: When 6" casters or larger casters are used, Anti Flutter Kit must be installed. See Standard Multi Position Fork page.

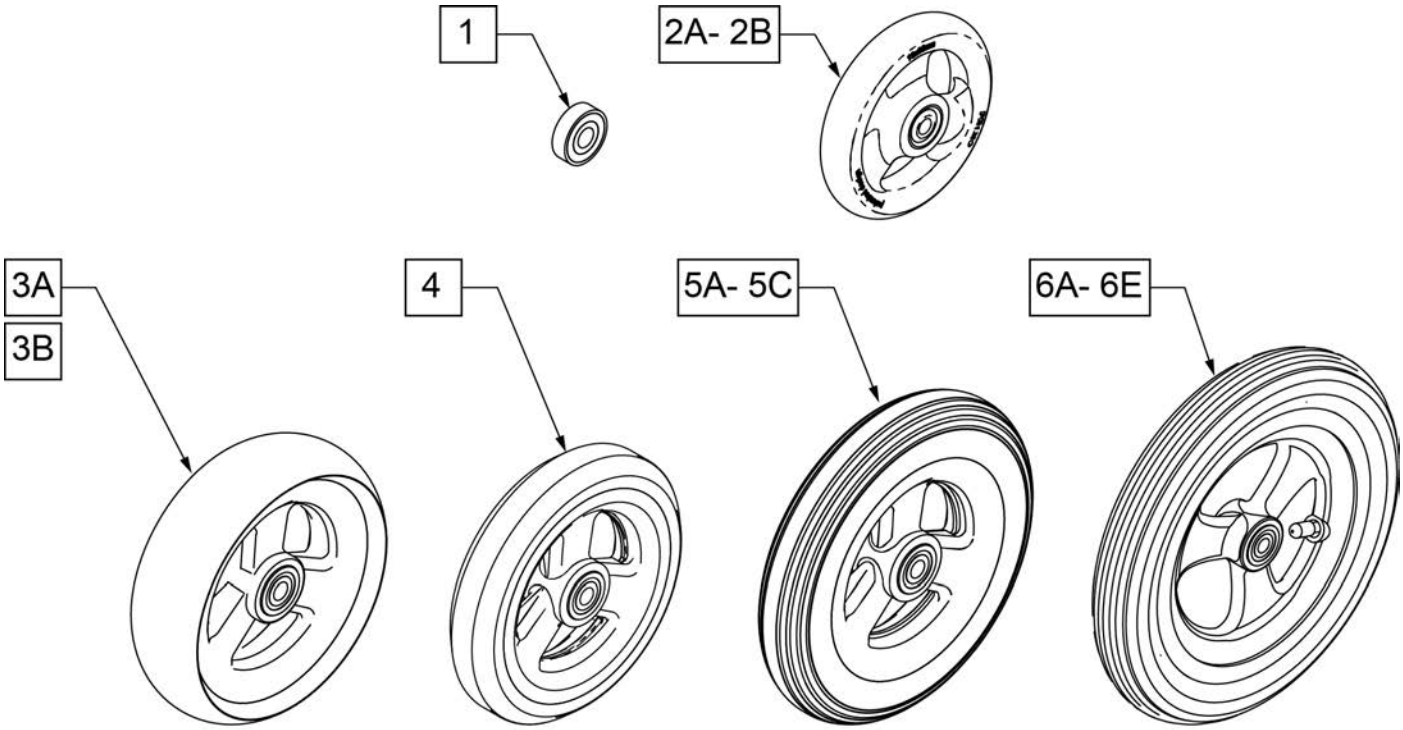

CASTER MEASURING GUIDE

PART NUMBER	"A" TIRE DIAMETER	"B" HUB WIDTH
101957	4.3	1.0
101098	4.0	1.0
101259	4.9	1.0
101255	5.7	1.0
101254	4.9	1.0

PART NUMBER	"A" TIRE DIAMETER	"B" HUB WIDTH
101256	5.75	1.0
101257	5.9	1.0
400212	8.0	1.0
400213	7.8	1.0
400214	6.9	1.0
400215	7.25	1.0

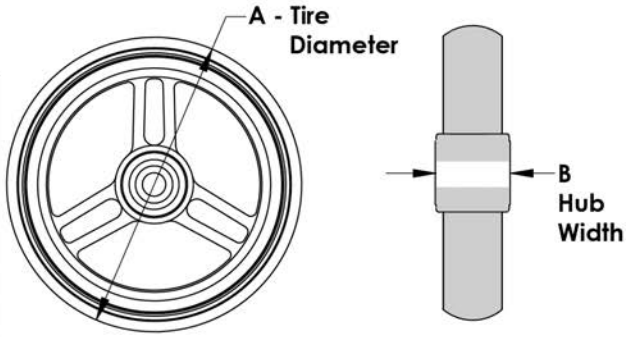

Pos.	Item Number	Description	Remarks
1	349502	7/8"x 5/16" BEARING	
2A	101957	4"X1-1/4 POLY 3 SPOKE CSTR	4" X 1.25 SEMI-PNEUMATIC
2B	101098	CASTER 4" PLASTIC/POLY W/BRG	4" LOW PROFILE POLY
3A	101259	5"X1-1/2" POLY 3 SPOKE CSTR	5" x 1.5" SEMI-PNEUMATIC
3B	101255	6"X1-1/2" POLY 3 SPOKE CSTR	6" x 1.5" SEMI-PNEUMATIC
4	101254	5" LOW POLY 3 SPOKE CASTER	5" LOW PROFILE POLY
5A	101256	6" SEMI PNEU 3 SPOKE CASTER	6" POLY
5B	101257	6" PNEUMATIC 3 SPOKE CASTER	6" PNEUMATIC
5C	383245	6" PNEUMATIC TIRE & TUBE	
6A	400212	CASTER 8" PNEU 3 SPK ASSM	8" PNEUMATIC
6B	400213	CASTER 8" POLY 3 SPK ASSM	8" POLY
6C	400214	CASTER 7" LOW POLY 3 SPK ASSM	7" x LOW PROFILE POLY
6D	383255	8" PNEUMATIC TIRE & TUBE	
6E	400215	CASTER 8" WIDE POLY 3 SPK ASSM	8" x 1.5" LOW POLY

8" x 2" CASTERS

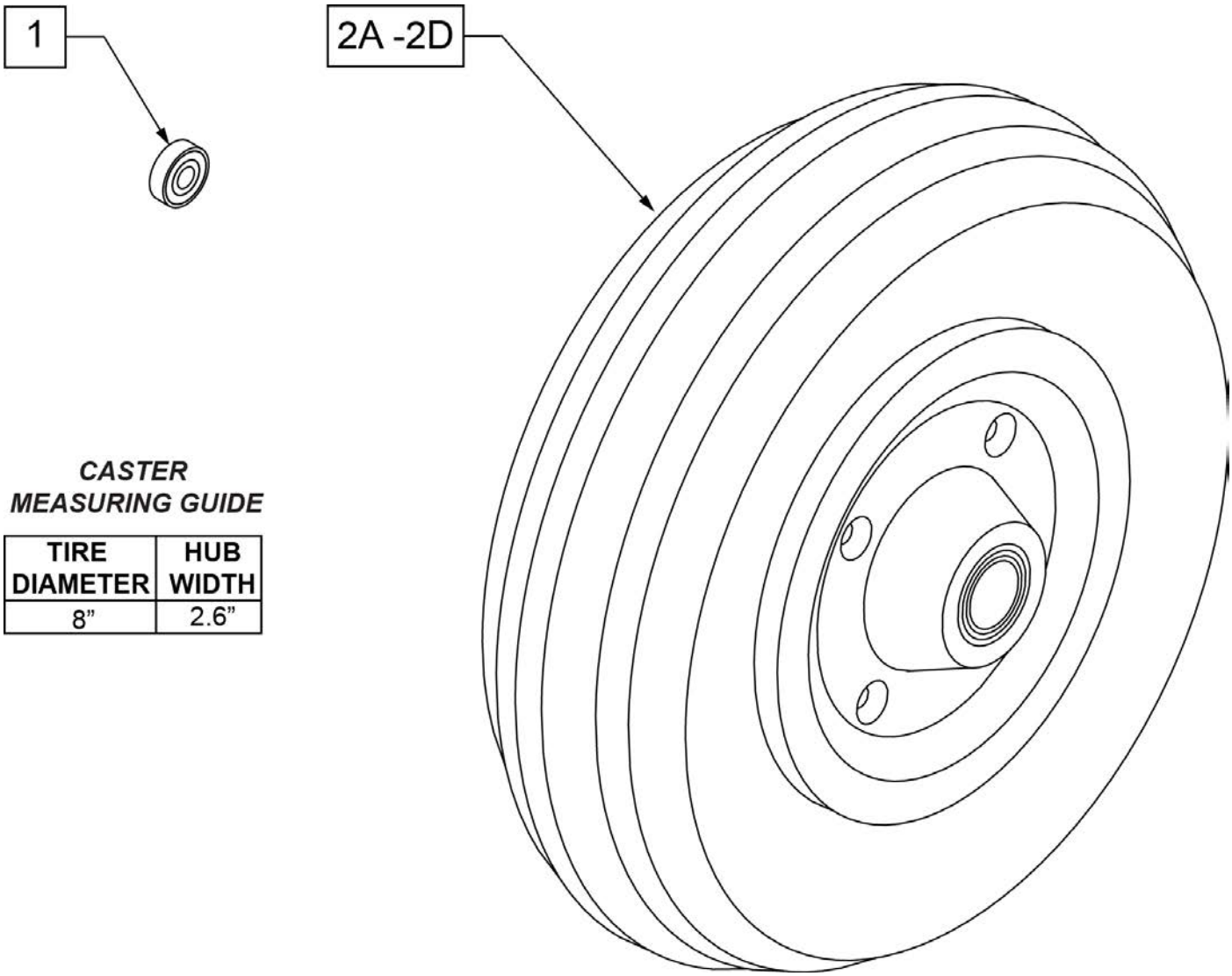

CASTER MEASURING GUIDE

TIRE DIAMETER	HUB WIDTH
8”	2.6”

Pos.	Item Number	Description	Remarks
1	349502	7/8"x 5/16" BEARING	
2A	400700	8" X 2" CMPST W/PNEU & BEARING	8" x 2" PNEUMATIC
2B	400702	8" X 2" CMPST W/PNEU INSRT&BRG	8" x 2" PNEUMATIC W/ INSERT
2C	384700	TIRE PNEUMATIC 8" x 2"	
2D	384730	INNER TUBE CASTER 8" x 2"	

Note: when the chair is equipped with 12" or 16 inch Rear Wheels the orientation of the Anti-tip Receiver (Item 1) is up, as shown; when equipped with 20", 22" or 24" Rear Wheels the orientation is down.

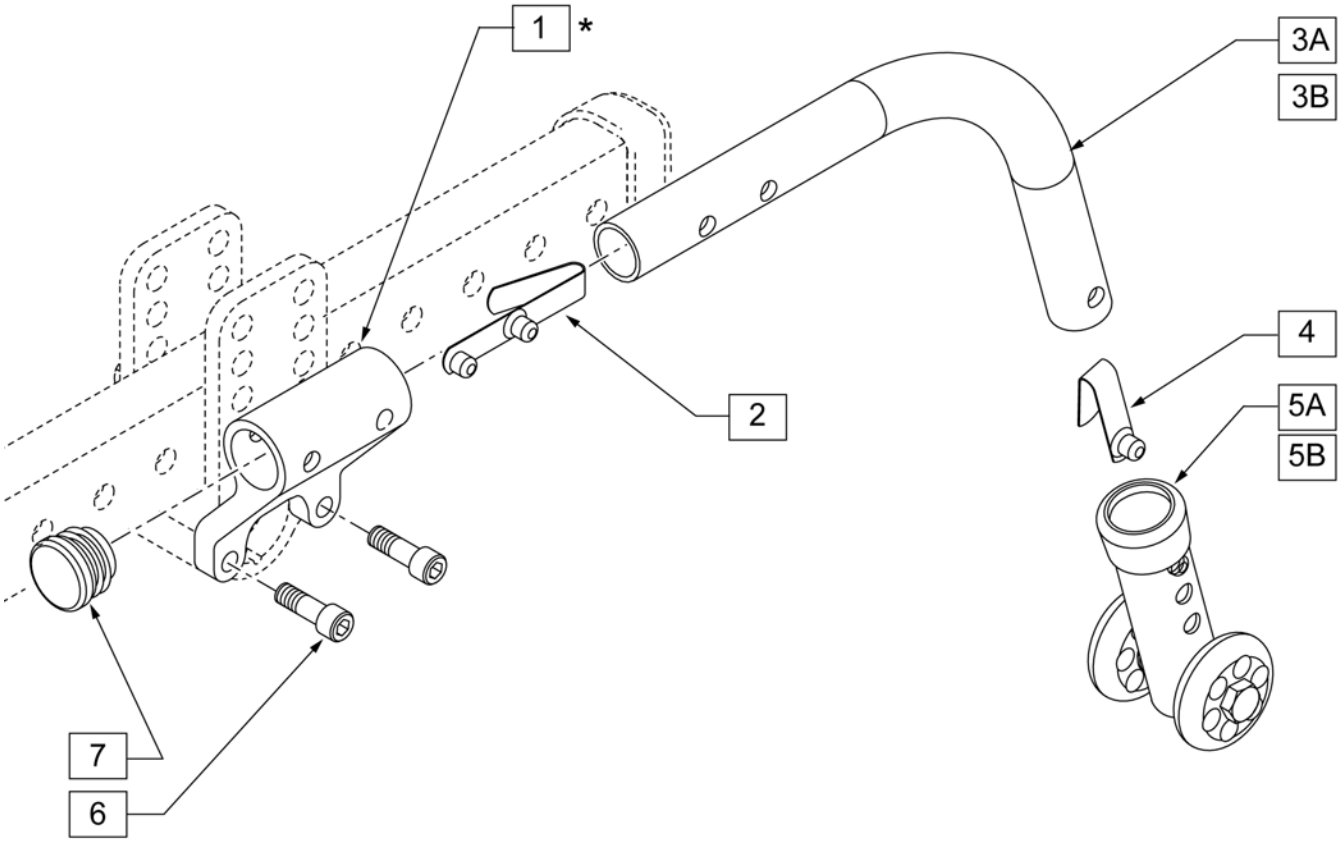

Pos.	Item Number	Description	Remarks
1	105847	RECEIVER ANTI-TIP	
2	301109	SNAP BUTTON DUAL ONE SIDE	
4	301100	SNAP BUTTON 1/4" SINGLE	
5A	881512	ANTI-TIP SLEEVE W/ WHEELS BLK 4 H	FOR USE WITH 12" REAR WHEELS
5B	104639	ANTI-TIP ARM ADJ MED	FOR USE WITH 16", 20", 22", & 24" REAR WHEELS
6	106974	SHCS 1/4 -28 x 3/4 PL ROHS	
7	560735	.875 ROUND TUBE PLUG	
2,3A,4	882964	ANTI-TIP TB SMALL R W/ SNAP BTN	RIGHT-FOR USE W/ 12" & 16" REAR WHEELS
2,3A,4	882965	ANTI-TIP TB SMALL L W/ SNAP BTN	LEFT- FOR USE W/ 12" & 16" REAR WHEELS
2,3B,4	104221-004	ANTI-TIP ARM ADJ MED RGT	RIGHT-FOR USE W/ 20 -24" REAR WHEELS
2,3B,4	104221-003	ANTI-TIP ARM ADJ MED LFT	LEFT- FOR USE W/ 20 -24" REAR WHEELS
1,6,7	108159	ANTI-TIP RECEIVER KIT	
2,3A,4,5A	882906	ANTI-TIP ASSM SMALL R BLK	RIGHT-FOR USE W/ 12" REAR WHEELS
2,3A,4,5A	882907	ANTI-TIP ASSM SMALL L BLK	LEFT- FOR USE W/ 12" REAR WHEELS
2,3A,4,5B	108282	ANTI-TIP ASSM REGULAR R BLK	RIGHT-FOR USE W/ 16" REAR WHEELS
2,3A,4,5B	108283	ANTI-TIP ASSM REGULAR L BLK	LEFT- FOR USE W/ 16" REAR WHEELS
2,3B,4,5B	050172-003	ANTI-TIP REGULAR ASSM R	RIGHT-FOR USE W/ 20", 22" & 24" REAR WHEELS
2,3B,4,5B	050173-003	ANTI-TIP REGULAR ASSM L	LEFT-FOR USE W/ 20", 22" & 24" REAR WHEELS

NOTE: For Zippie IRIS chairs built prior to s/n # ZRS-006475 & ZRSE-003115 and Quickie IRIS chairs prior to s/n# IRS-020876 & IRSE 028386 replace 15-18 & 21A/21B plus new Outer Roller Plate.

Note: see information panel for positioning instruction guide.

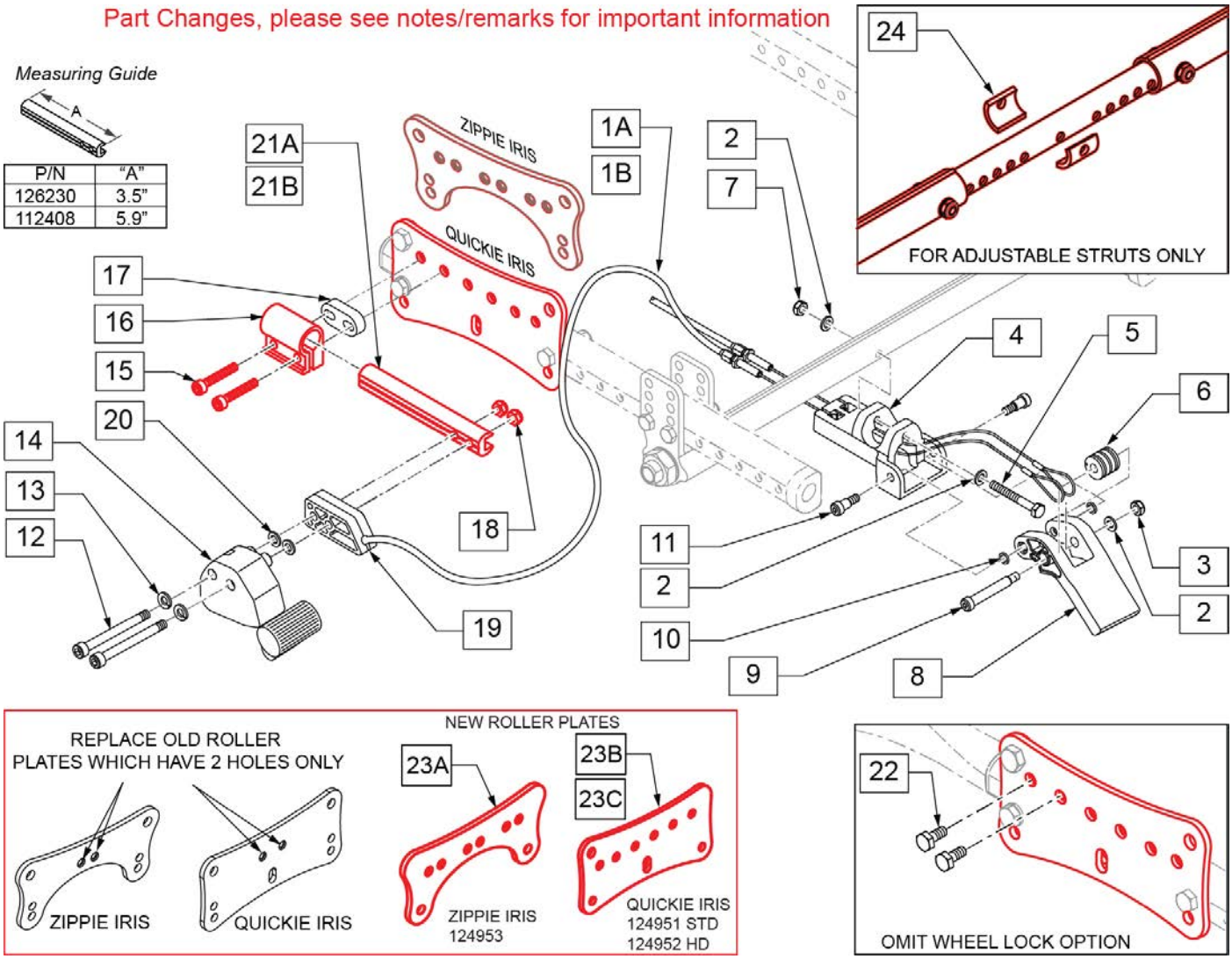

Pos.	Item Number	Description	Remarks
1A	342016	ATTENDANT WHEEL LOCK CABLE ASSM SHORT	SHORT (12 & 16" REAR WHEELS)
1B	342017	ATTENDANT WHEEL LOCK CABLE ASSM LONG	LONG (20 -24" REAR WHEELS)
2	106945	WASHER FLAT SAE 1/4 ROHS	

Pos.	Item Number	Description	Remarks
3	106934	NUT NYLOCK 1/4-28 ROHS	
4	123517	ATTENDT WHL LCK MT BRKT	
5	107351	HHCS 1/4-28 X 2 1/4 ROHS	
6	506185	BEARING ATTENDANT WHEEL LOCK CABLE	
7	106934	NYLOCK NUT 1/4-28	
8	506182	ATTENDANT WHEEL LOCK ACTUATION PEDAL	
9	281041	SHOULDER SCREW .312 DIA x 1.75 LONG	
10	481353	SPACER, BEARING	
11	281048	SHOULDER SCREW .312 DIA x .375 LONG	
12	103190-013	SHCS M6 x 1 x 60 PART NP	
13	262133	WASHER LOCK M6	
14	119952	REMOTE LOCK RIGHT SIDE US	RIGHT
14	119953	REMOTE LOCK LEFT SIDE US	LEFT
15	106976	SHCS 1/4-28 X 1-1/2	
16	124954	WHEEL LOCK CLAMP	
15,16	126201	WHEEL LOCK CLAMP W/HARDWARE	
17	126237	BLOCK MOUNT WHEEL LOCK 10MM	
18	104381	NUT HEX NYLOCK M6 X 1.0	
19	506184	SPACER ATTENDANT WHEEL LOCK	
20	107383	WASHER FLAT M6 ROHS	
21A	126230	SLIDE ADJ SHRT FOOT LOCK	Short Block; 3.94" length
21B	112408	SLIDE ADJ FOOT LOCK	Standard Block; 5.91" length
22	221102	1/4-28 X 3/4 HEX HEAD C/S BLK W/PTCH	
23A	124953	PLATE ROLLER OUTER PED	New Zippie Roller Plate
23B	124951	PLATE ROLLER OUTER STD	New Quickie Roller Plate
23C	124952	PLATE ROLLER OUTER HD	New Quickie Roller Plate
24	127210	SPACER ATTENDANT WHEEL LOCK	order for use with adj struts only
1A,2-11	119472	ATTENDANT WHEEL LOCK PEDAL KIT	
1A,2-20,21B	108138	ATTENDANT WHEEL LOCK ASSM SHORT MAG	See Wheel Lock Setup guide in Informations section to select correct kit

Pos.	Item Number	Description	Remarks
1B,2-20,21B	108139	ATTENDANT WHEEL LOCK ASSM LONG MAG	See Wheel Lock Setup guide in Informations section to select correct kit
1B,2-20,21B	108140	ATTENDANT WHEEL LOCK ASSM LONG SPK	See Wheel Lock Setup guide in Informations section to select correct kit
1A,2-20,21A	126252	ATTENDANT WHEEL LOCK REV SHORT	See Wheel Lock Setup guide in Informations section to select correct kit
1B,2-20,21A	126253	ATTENDANT WHEEL LOCK REV LONG	See Wheel Lock Setup guide in Informations section to select correct kit

USER WHEEL LOCK (PUSH TO LOCK)

Note: For Zippie IRIS chairs built prior to S/N ZRS-006475 & ZRSE-003115 and Quickie IRIS chairs prior to S/N IRS-020876 & IRSE 028386 replace with complete Wheel Lock Assembly & new Outer Roller Plates (item 8A, 8B, or 8C); order qty 2 each of Outer Roller Plates.

Note: if retro-fitting Push to Lock Wheel Locks to an IRIS that previously had Hub or FootLock styles, SEE information panel for User/Push to Lock Set Up Guide, to ensure you will be getting the appropriate wheel lock kit.

Note: the Wheel Locks for Chair or Replacement Part orders shipped on or after 6/27/17 have upgraded mounting hardware; please replace in pairs for chairs ordered prior to 6/27/17.

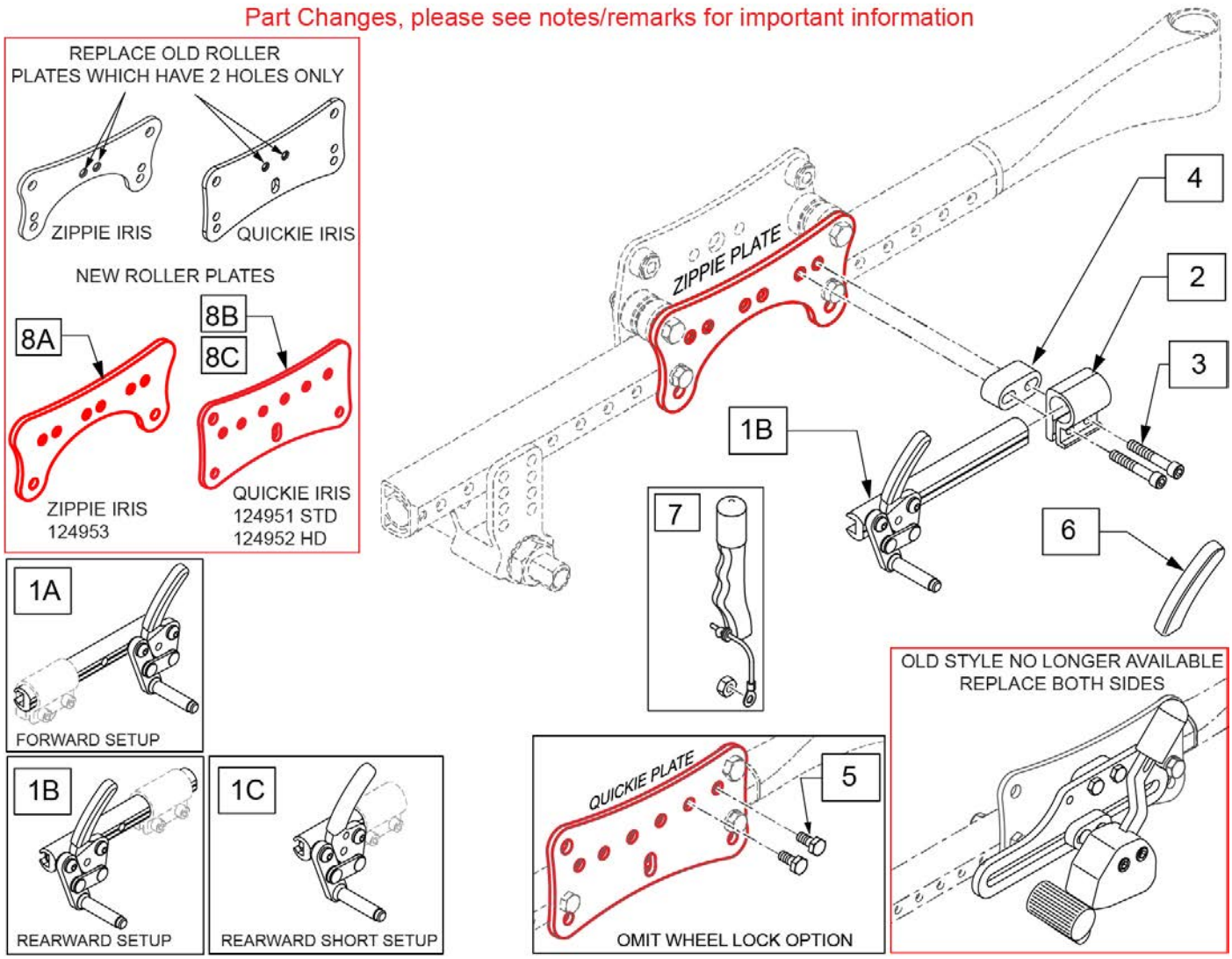

Pos.	Item Number	Description	Remarks
1A	104216-005	WHEEL LOCK PUSH R FWD LNG	Long Slide Block: 5.91"/150mm
1A	104216-006	WHEEL LOCK PUSH L FWD LNG	Long Slide Block: 5.91"/150mm
1B	104216-007	WHEEL LOCK PUSH R REV LNG	Long Slide Block: 5.91"/150mm

Pos.	Item Number	Description	Remarks
1B	104216-008	WHEEL LOCK PUSH L REV LNG	Long Slide Block: 5.91"/150mm
1C	104216-003	WHEEL LOCK PUSH R REV SHT	Short Slide Block: 3.5"/89mm
1C	104216-004	WHEEL LOCK PUSH L REV SHT	Short Slide Block: 3.5"/89mm
2	124954	WHEEL LOCK CLAMP	
3	106976	SHCS 1/4-28 X 1-1/2	
4	126237	BLOCK MOUNT WHEEL LOCK 10MM	
5	221102	1/4-28 X 3/4 HEX HEAD C/S BLK W/PTCH	
6	104141	COVER CURVED WHEEL LOCK VINYL	
7	161929	WHEEL LOCK EXTENSION ASSY KIT	Each
2,3A,3B	126201	WHEEL LOCK CLAMP W/HARDWARE	Each
1A,2-4	108136	WHEEL LOCK KIT MAG R FWD	Order option detail code: 183WL33 (Q-IRS), 188WL33 (Z-IRIS)
1A,2-4	108137	WHEEL LOCK KIT MAG L FWD	Order option detail code: 183WL33 (Q-IRS), 188WL33 (Z-IRIS)
1A,2-4	108586	WHEEL LOCK KIT SPK R FWD	Order option detail code: 183WL34 (Q-IRS), 188WL34 (Z-IRIS)
1A,2-4	108587	WHEEL LOCK KIT SPK L FWD	Order option detail code: 183WL34 (Q-IRS), 188WL34 (Z-IRIS)
1B,2-4	126202	WHEEL LOCK KIT MAG R REV	Order option detail code: 183WL58 (Q-IRS), 188WL58 (Z-IRIS)
1B,2-4	126203	WHEEL LOCK KIT MAG L REV	Order option detail code: 183WL58 (Q-IRS), 188WL58 (Z-IRIS)
1B,2-4	126204	WHEEL LOCK KIT SPK R REV	Order option detail code: 183WL57 (Q-IRS), 188WL57 (Z-IRIS)
1B,2-4	126205	WHEEL LOCK KIT SPK L REV	Order option detail code: 183WL57 (Q-IRS), 188WL57 (Z-IRIS)
1C,2-4	126250	WHEEL LOCK KIT R REV SHRT	Order option detail code: 183WL61 (Q-IRS), 188WL61 (Z-IRIS)
1C,2-4	126251	WHEEL LOCK KIT L REV SHRT	Order option detail code: 183WL61 (Q-IRS), 188WL61 (Z-IRIS)
8A	124953	PLATE ROLLER OUTER PED	New Zippie Roller Plate
8B	124951	PLATE ROLLER OUTER STD	New Quickie Roller Plate
8C	124952	PLATE ROLLER OUTER HD	New Quickie Roller Plate

HUB LOCK

NOTE: Must order wheel & axle separately.

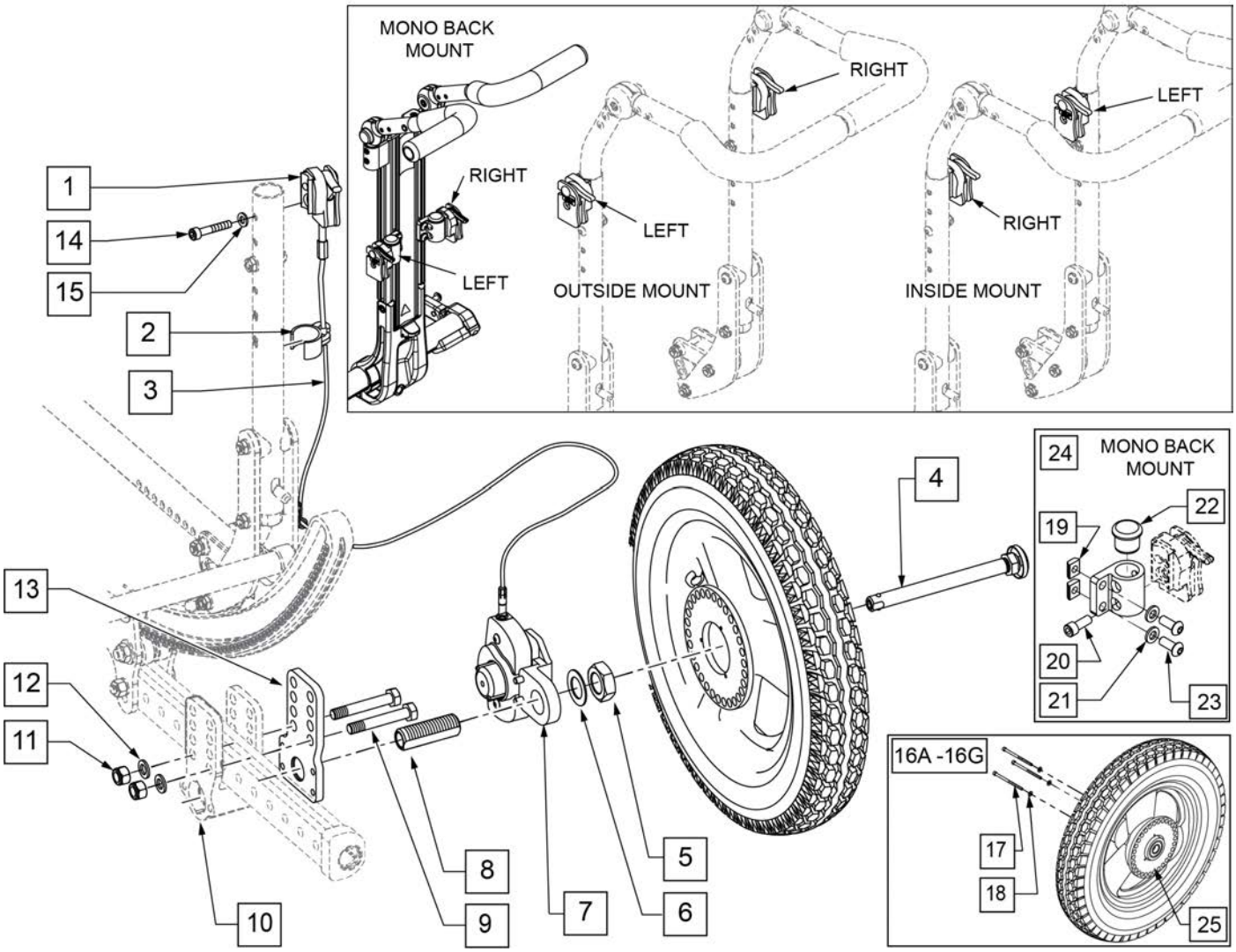

Pos.	Item Number	Description	Remarks
1	112426	HUB LOCK LEVER ASSM R	DOES NOT INCLUDE CABLE
1	112427	HUB LOCK LEVER ASSM L	DOES NOT INCLUDE CABLE
2	108134	CABLE CLIP 1" PACK (10)	PACK OF 10
4	102063	QR AXLE MAG W/ M-12 NUT	
5	116569	NUT HEX 3/4-16 BLACK ZINC	
6	116570	WASHER FLAT 3/4 X 1.25 BLK ZNC	
8	481065	AXLE SLEEVE SS	
9	106986	HHCS 5/16-24 X 2-1/4	
10	105837	AXLE PLATE STD R RIGHT	
10	105838	AXLE PLATE STD L LEFT	
11	106938	NUT NYLOCK 5/16 -24 ROHS	
12	106946	WASHER FLAT AN 5/16 ROHS	
13	111851	PLATE ADAPTER HUB LOCK IRIS	
14	106976	SHCS 1/4 -28 x 1 1/2 ROHS	

Pos.	Item Number	Description	Remarks
15	106943	WASHER FLAT AN 1/4 ROHS	
16A	112226-001	WHEEL HUB LOCK 12" PNEU	
16B	112226-002	WHEEL HUB LOCK 12" AIRLESS	
16C	112226-003	WHEEL HUB LOCK 12" LOW POLY	
16D	112227-001	WHEEL HUB LOCK 16" PNEU	
16E	112227-002	WHEEL HUB LOCK 16" AIRLESS	
16F	112226-004	WHEEL HUB LOCK 12IN PNEU BLK	Black Tire
16G	112226-005	WHEEL HUB LOCK 12IN INSRT BLK	Black Tire
17	112231	SHCS6-32 X 2-1/4 ROHS	
18	112230	WASHER FLAT #6	
19	481106-QU	1/4-28 CHANNEL NUT	
20	118928	SHCS 1/4-28 X 5/8	
21	106943	WASHER FLAT AN 1/4	
22	561007	7/8" INSERT PLUG .083	
23	106959	BHCS 1/4-28 X 5/8	
24	130661	HUB LOCK MOUNT ASSM MONO	
25	111845	INDEX WHEEL 12IN	
3,7	112813-004	LOCK ASSM HUB LOCK 'A' XL RH RIGHT	RIGHT -INCLUDES CABLE
3,7	112814-004	LOCK ASSM HUB LOCK 'B' XL LH LEFT	LEFT -INCLUDES CABLE
1 -3, 5 -15	115824	HUB LOCK Z IRIS KIT	Wheels & Axles not included; order separately

12" MAG

Note: Black Tires are not sold separately; please order the appropriate assembly part number.

Note: if changing the Rear Wheel Size on a chair with Anti-tips, new size Anti-tip Assemblies ARE REQUIRED to accommodate the new Rear Wheel Size.

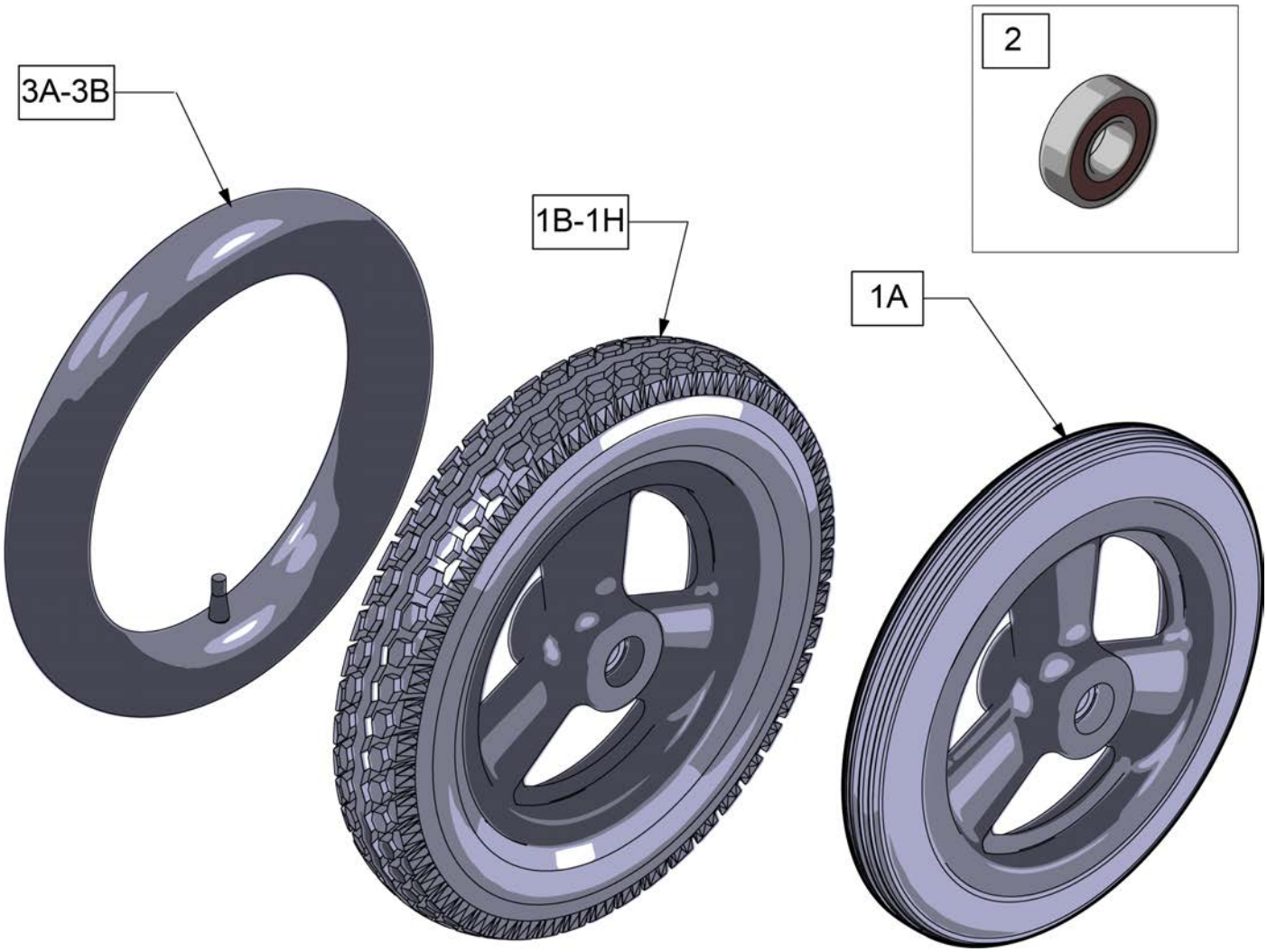

Pos.	Item Number	Description	Remarks
1A	101466	12 IN MAG POLY TIRE 3 SPOKE	Low Poly
1B	101661	12" MAG PNEU 3 SPOKE	Grey Tire; for Quickie & Zippie Iris see Black Wheel Assm p/n's below
1C	101662	12" MAG PNEU INSRT 3 SPK	Grey Tire; for Quickie & Zippie Iris see Black Wheel Assm p/n's below
1D	384706	TIRE PNEU 12-1/2" X 2-1/4"	Grey Tire only
1E	243593	12IN MAG PNEU 3 SPOKE BLK	Black tire, only available on Quickie and Zippie IRIS at this time
1F	243594	12IN MAG PNEU INSRT 3 SPK BLK	Black tire, only available on Quickie and Zippie IRIS at this time
1G	112226-004	WHEEL HUB LOCK 12IN PNEU BLK	Black tire for Hub lock, only available on Quickie and Zippie IRIS at this time
1H	112226-005	WHEEL HUB LOCK 12IN INSRT BLK	Black tire for Hub lock, only available on Quickie and Zippie IRIS at this time
2	349500	1 1/8 X 1/2 BEARING	
3A	384736	INNER TUBE 12-1/2" X 2-1/4"	
3B	102972-001	12 1/2 IN AIRLESS INSERT	

16" MAG

Note: if changing the Rear Wheel Size on a chair with Anti-tips, new size Anti-tip Assemblies ARE REQUIRED to accommodate the new Rear Wheel Size.

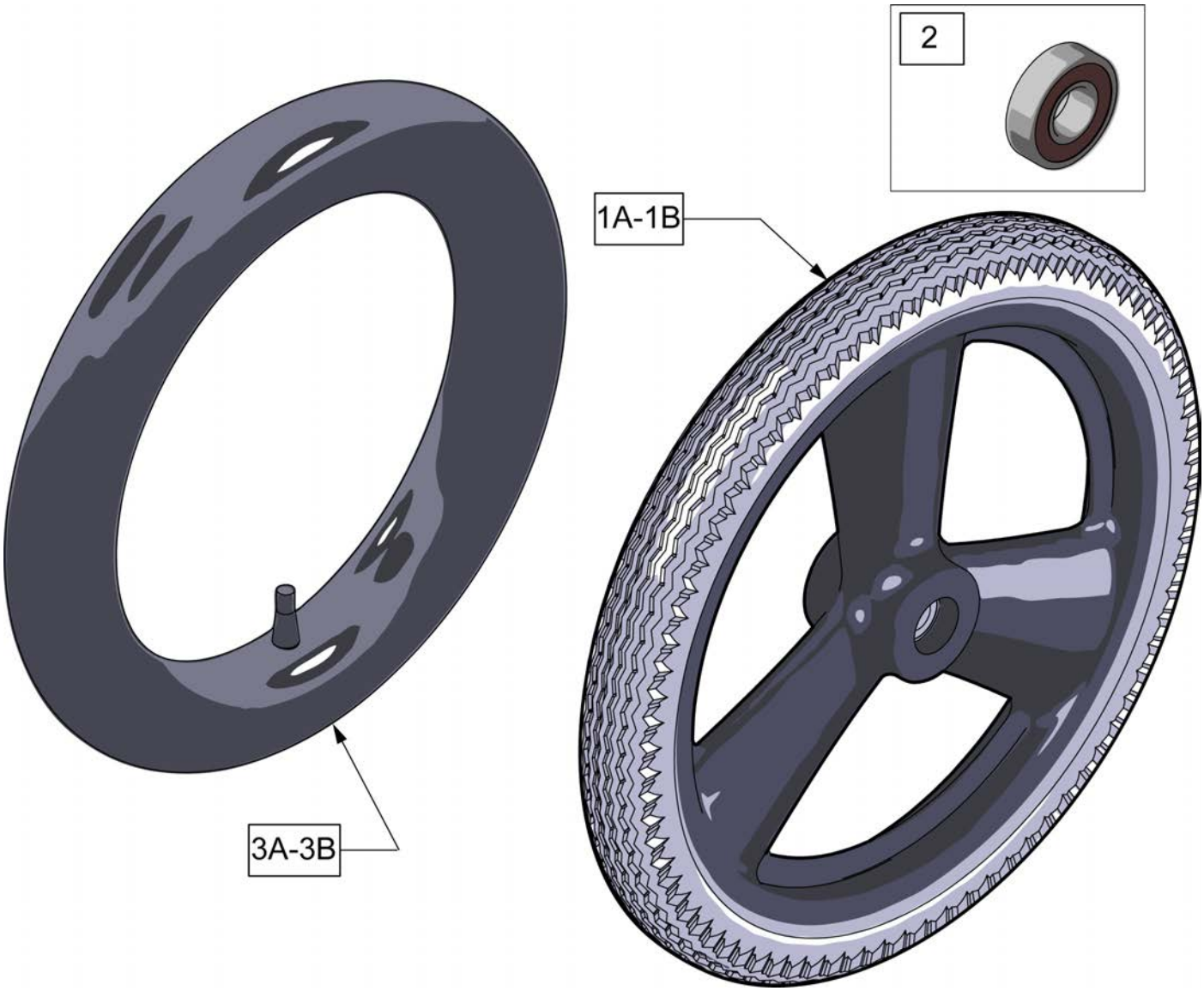

Pos.	Item Number	Description	Remarks
1A	101667	16 IN MAG PNEU 3 SPOKE	
1B	101668	16 IN MAG PNEU W/INSERT	
1C	385237	16" X 1.75" PNEU TIRE	Tire Only
2	349500	1 1/8 X 1/2 BEARING	
3A	384738	16" X 1.75" INNER TUBE	
3B	102973-001	16IN AIRLESS INSERT	

TRADITIONAL 6 SPOKE MAG

(03/24/2020)

Note: this wheel utilizes Screw Mount Handrims - the handrim has a threaded hole that mounts the handrim to the wheel through a spacer and fastener.

Note: if Mag Wheel Assembly was ordered without Handrim and a Handrim is added to the wheel, qty 6 of 101932 and 281175 ARE REQUIRED to properly mount the handrim.

Note: if changing the Rear Wheel Size on a chair with Anti-tips, new size Anti-tip Assemblies ARE REQUIRED to accommodate the new Rear Wheel Size.

Note: for Zippie X'Cape 6 Spoke Mags are only available with the One Arm Drive.

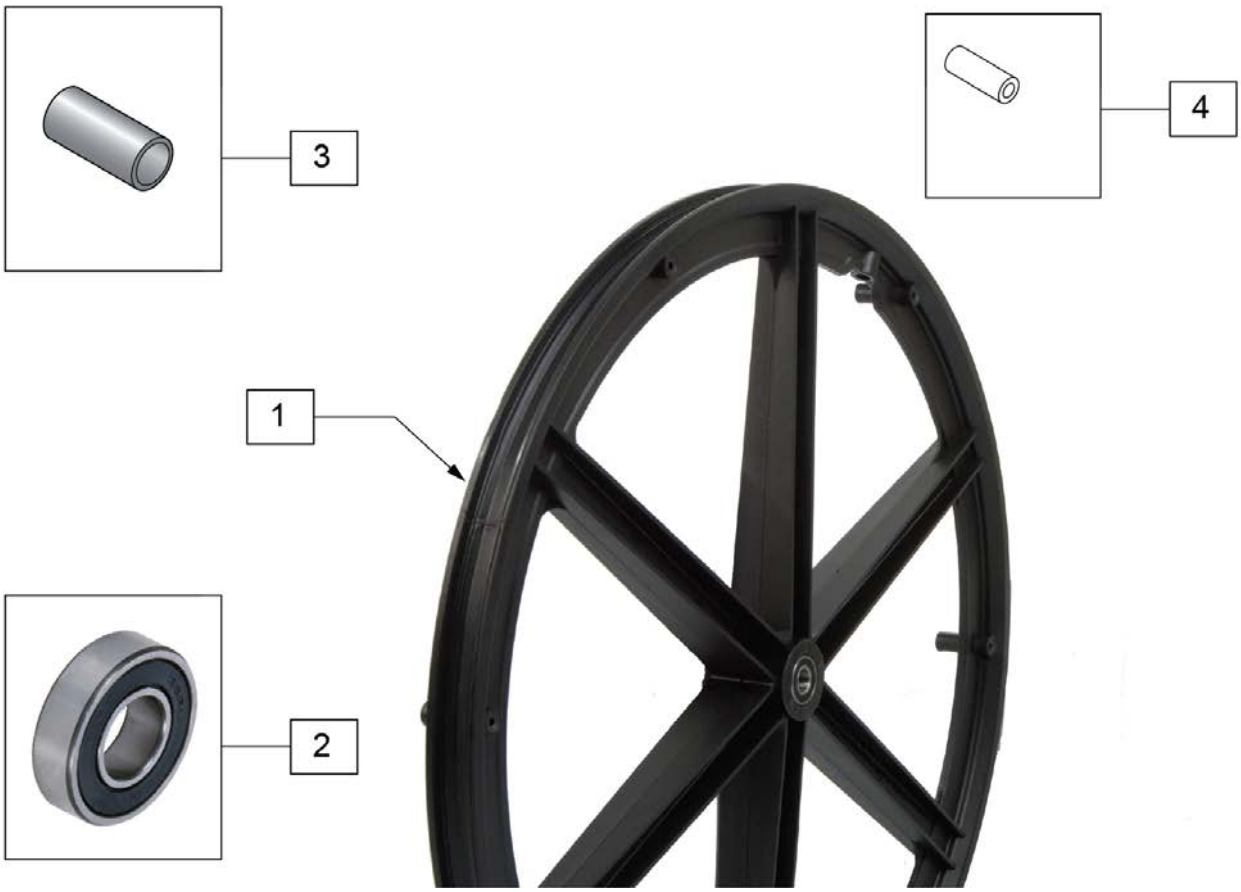

Pos.	Item Number	Description	Remarks
1-3	401094	20" MAG W/BRNG 6 SPOKE	20"
1-3	401093	22" MAG W/BRNG 6 SPOKE	22"(501mm)
1-3	401092	24" MAG W/BRNG 6 SPOKE	24"(540mm)
2	349500	1 1/8 X 1/2 BEARING	
3	521564	MAG BEARING SPACER	
4	101932	SPCR .194ID X .375 OD X .750	Used when previously ordered with Omit handrims or Natural Fit Handrims

QUICKIE SPOKE

(03/24/2020)

Note: this wheel utilizes Screw Mount Handrims - the handrim has a threaded hole that mounts to the wheel through a spacer and fastener.

Note: if changing the Rear Wheel Size on a chair with Anti-tips, new size Anti-tip Assemblies ARE REQUIRED to accommodate the new Rear Wheel Size.

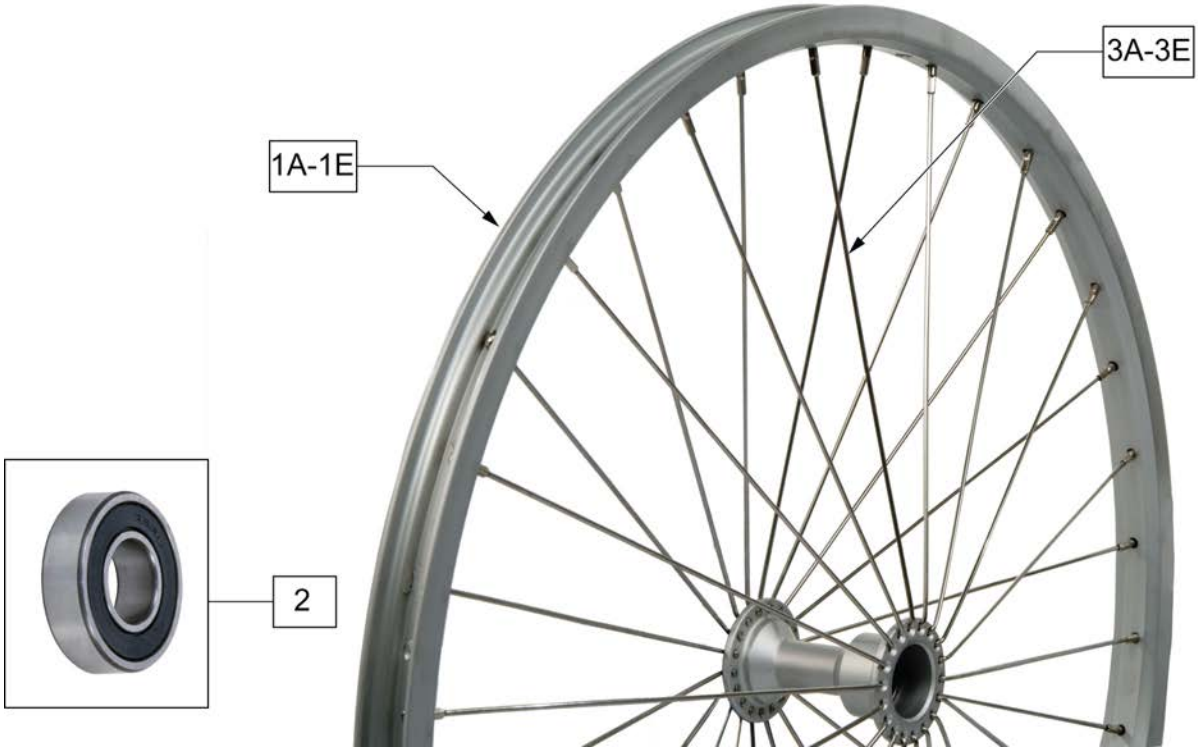

Pos.	Item Number	Description	Remarks
1A	401001	WHEEL ASSM PUSH BUTTON 18"	18"
1B	401070	20" RIM ASSM PUSH BUTTON	20"
1C	401072	22" RIM ASSM PUSH BUTTON	22"(501mm)
1D	401074	24" RIM ASSM PUSH BUTTON	24"(540mm)
1E	401077	26IN RIM ASSM PUSH BUTTON	26"(590mm)
2	349500	1 1/8 X 1/2 BEARING	
3A	362247	SPOKE 154MM X 2.0MM	
3B	362250	QP SPOKE 201MM X 2.0MM	
3C	362275	QP SPOKE 226MM X 2.0MM	
3D	362300	QP SPOKE 244MM X 2.0MM	
3E	362325	QP SPOKE 270MM X 2.0MM	

LITE SPOKE

Note: this Wheel utilizes Screw Mount Handrims; the Handrim has a threaded hole that mounts the Handrim to the Wheel through a spacer and fastener.

Note: the Lite Spoke Wheel has a total of 30 spokes.

Note: if changing the Rear Wheel Size on a chair with Anti-tips, new size Anti-tip Assemblies ARE REQUIRED to accommodate the new Rear Wheel Size.

Note: when ordering replacement bearings, if dust shield on bearing has the following markings: MBL-Z2 6001 2RS, then order P/N 114097.

Pos.	Item Number	Description	Remarks
1A	118755	WHEEL ASSM GALLOP 20IN	20" (451)
1B	118756	WHEEL ASSM GALLOP 22IN	22" (501)
1C	107131	WHEEL RIM/SPOKE 24" ASSM	24" (540)
1D	118764	25 LT SPK W-HNDRM ANO ASSM GLP	25" (559)
1E	118760	WHEEL ASSM GALLOP 26IN	26" (590)
2A	114097	BEARING, REPLACEMENT, MBL	12.7mm i.d. - 28mm o.d. - 8mm wide; used prior to 11/29/10
2B	349500	1_125 X .5 BEARING	Beginning 11/29/10
3A	118100	MBL LT 20IN SPOKE RPLMNT KIT	Kit contains 6 inner and 6 outer spokes
3B	118101	MBL LT 22IN SPOKE RPLMNT KIT	Kit contains 6 inner and 6 outer spokes
3C	118102	MBL LT 24IN SPOKE RPLMNT KIT	Kit contains 6 inner and 6 outer spokes
3D	118103	MBL LT 25IN SPOKE RPLMNT KIT	Kit contains 6 inner and 6 outer spokes
3E	118104	MBL LT 26IN SPOKE RPLMNT KIT	Kit contains 6 inner and 6 outer spokes

5 SPOKE MAG

Note: 5 Spoke Mag is not compatible with One Arm Drive or Projection Handrims.

Note: 5 Spoke Mag utilizes exclusive screw mounted handrims.

Note: if changing the Rear Wheel Size on a chair with Anti-tips, new size Anti-tip Assemblies ARE REQUIRED to accommodate the new Rear Wheel Size.

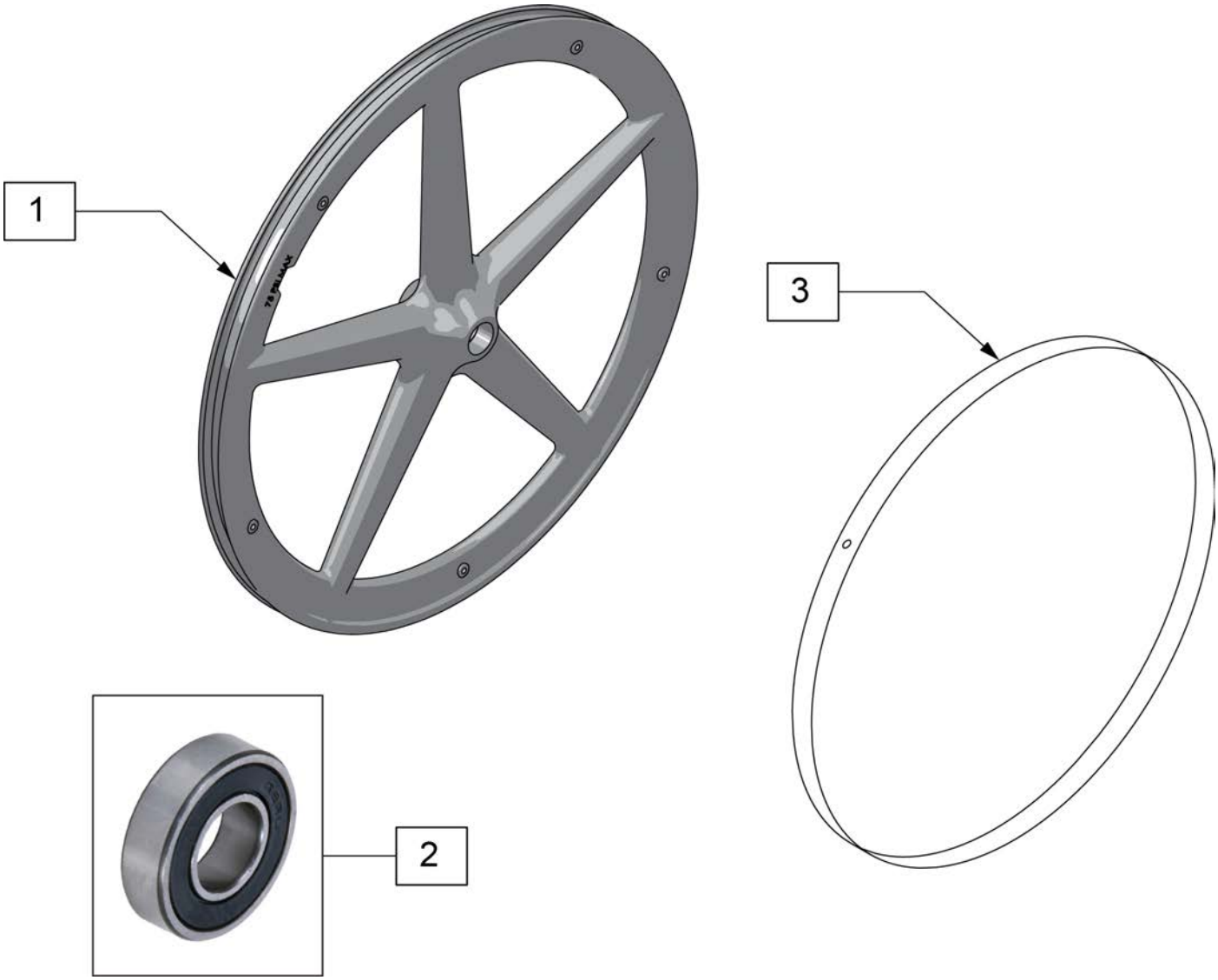

Pos.	Item Number	Description	Remarks
1,2	128985	20" 5 SPOKE MAG WHEEL	20" (451mm)
1,2	128986	22" 5 SPOKE MAG WHEEL	22" (501mm)
1,2	126405	24" MAG W/BRNG 5 SPOKE	24" (540mm)
2	349500	1 1/8 X 1/2 BEARING	
3	129325	20" MAG RIM STRIP	
3	129324	22" MAG RIM STRIP	
3	127912	24" MAG RIM STRIP	

PNEUMATIC & PNEU. AIRLESS TIRE

Pos.	Item Number	Description	Remarks
1	385237	16" X 1.75" PNEU TIRE	
1	385250	20" PNEUMATIC TIRE	
1	385275	22" PNEUMATIC TIRE	22" x 1 3/8 (501mm)
1	385300	24" PNEUMATIC TIRE	24" x 1 3/8 (540mm)
1	385325	26" PNEUMATIC TIRE	26" x 1 3/8 (590mm)
1	384614	24" x 2.125 PNEUMATIC TIRE	24"x2 1/8 (540mm) used w/ M6

FULL POLY TIRE

(01/2010)

Pos.	Item Number	Description	Remarks
1	386232	20" POLY TIRE STD	20"
1	386242	22" POLY TIRE STD	22" (501mm)
1	386252	24" POLY TIRE STD	24" (540mm)

LOW POLY TIRE

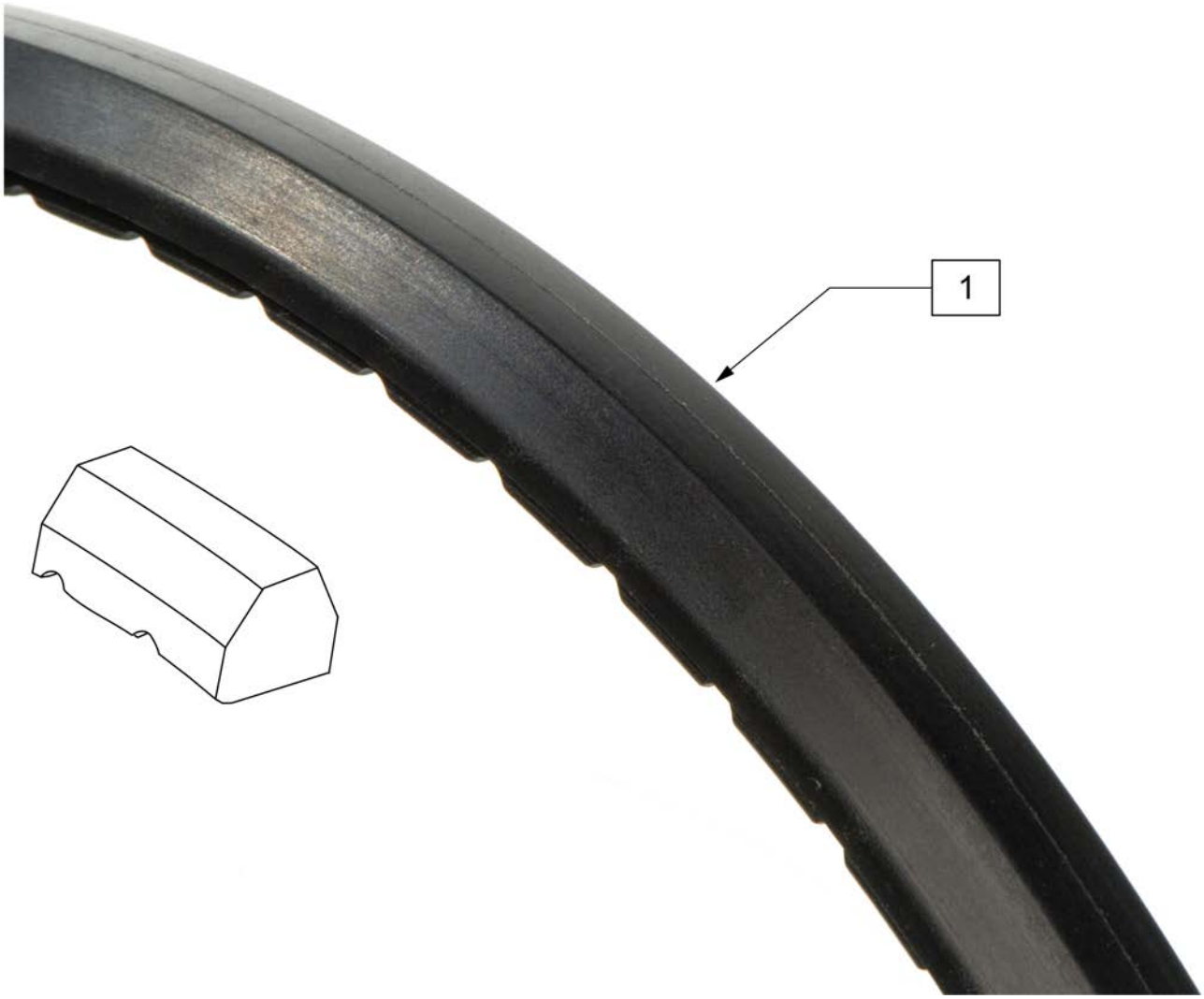

Pos.	Item Number	Description	Remarks
1	386262	20" LP POLY TIRE BR	20" =16" dia
1	386263	22" LP POLY TIRE BR	22"(501mm) = 18"dia
1	386254	24" POLY LOW PROFILE	24"(540mm)= 23" dia

Pos.	Item Number	Description
1	385350	24" KEVLAR TIRE

TUBES AND AIRLESS INSERTS

Pos.	Item Number	Description	Remarks
1A	Discontinued	Presta Valves Discontinued	
1A	384736	INNER TUBE 12-1/2" X 2-1/4"	
1A	384738	16" X 1.75" INNER TUBE	
1A	382255	TUBE 18" TIRE	18" X 1-3/4" TUBE
1A	382275	20" TUBE	20" 1-3/8" TUBE
1A	382300	22" TUBE	22" X 1-3/8" TUBE
1A	382336	TUBE PRIMO 24" 25-540 SV	24" X 1" TUBE
1A	382325	24 X 1.3/8IN TUBE REG	
1A	382334	TUBE INLINE 24 X 1.75	
1A	384551	26" X 1" TUBE SCHRADER	
1A	382350	26" TUBE	26" X 1-3/8" TUBE
1A	382361	TUBE 26 X 1.5/1.95/ S/V	
1A	382365	26 X 1.25/1.5 TUBE SHRADER	
1A	382375	24" x 2.125 TUBE	
1B	102972-001	12 1/2 IN AIRLESS INSERT	12-1/2" X 2-1/4"
1B	102973-001	16IN AIRLESS INSERT	16" X 1-3/4"
1B	102973-002	18IN AIRLESS INSERT	18" X 1-3/4"
1B	102973-003	20IN AIRLESS INSERT	20" X 1-3/8"
1B	102972-002	AIRLESS INSERT 20 X 2-1/8 P3	
1B	102973-004	22IN AIRLESS INSERT	22" X 1-3/8"
1B	102973-005	24IN AIRLESS INSERT	24" X 1-3/8"
1B	102972-003	AIRLESS INSERT 24 X 2-1/8	
1B	108259	26" AIRLESS INSERT	26" X 1-3/8"

NOTE: Drop Seat Pan lowers seat 2" and does not work with Transit option, HD package or Contracture Footrest System.

NOTE: Seat Pans are adjustable 14 -22" Deep.

NOTE: If adding a seat pan to a chair with Single Post Armrest then a Kids Receiver must be utilized.

NOTE: "Seat Pan Assm w/ Hdwr XX" - XX"" does not include the hardware to mount the pan to the chair. The appropriate "Reg Seat Pan Mounting Kit" or "Drop Seat Pan Mounting Kit" must be ordered.

NOTE: If changing from a Drop Seat Pan to a Regular Seat Pan or Vise Versa a smaller or larger pan will be required, please refer to the remarks section for appropriate pan that will be required for desired width.

[12/2017]

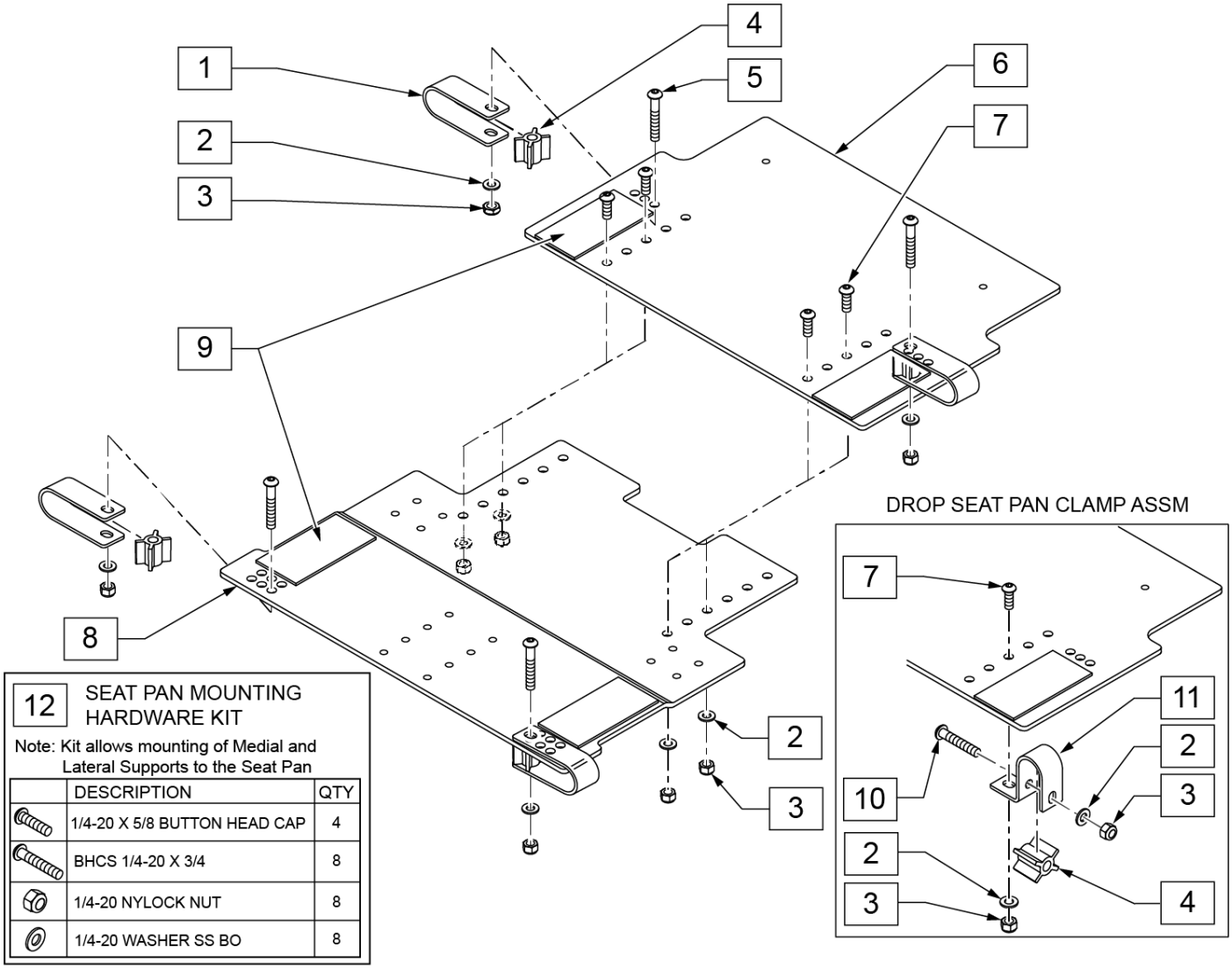

Pos.	Item Number	Description	Remarks
1	107073	CLAMP SEAT PAN STD	
2	106946	WASHER FLAT AN 5/16 ROHS	
3	202117	5/16-18 NYLOCK NUT THICK BLK	
4	560771	SPACER SEAT PAN	
5	106982	BHCS 5/16 -18" x 1 3/4 SHLD ROHS	
7	106979	BHCS 5/16 -18" x 3/4 ROHS	
9	698057	2 x 4" HOOK PSA BLACK CUT	
10	106981	BHCS 5/16 -18 x 1 1/2 ROHS	
11	107074	CLAMP SEAT PAN DROP	
12	162353	ALU SEAT PAN MOUNTING HDWR KIT	
		FRONT SEAT PANS WITH VELCRO	
8,9	108592	SEAT PAN FRONT 12-14 VELCRO	Fits 14W DROP
8,9	109625	SEAT PAN FRONT 13-15 VELCRO	Fits 15W DROP
8,9	108141	SEAT PAN FRONT 14 -16" VELCRO	Fits 14W STD or 16W DROP
8,9	109626	SEAT PAN FRONT 15-17 VELCRO	Fits 15W STD or 17W DROP
8,9	108142	SEAT PAN FRONT 16 -18" VELCRO	Fits 16W STD or 18W DROP
8,9	109627	SEAT PAN FRONT 17-19 VELCRO	Fits 17W STD or 19W DROP
8,9	108143	SEAT PAN FRONT 18 -20" VELCRO	Fits 18W STD or 20W DROP
8,9	109628	SEAT PAN FRONT 19-21 VELCRO	Fits 19W STD or 21W DROP

Pos.	Item Number	Description	Remarks
8,9	108144	SEAT PAN FRONT 20 -22" VELCRO	Fits 20W STD or 22W DROP
8,9	109629	SEAT PAN FRONT 21-23 VELCRO	Fits 21W STD
8,9	108145	SEAT PAN FRONT 22 -24" VELCRO	Fits 22W STD
		REAR SEAT PANS WITH VELCRO	
8,9	108593	SEAT PAN REAR 12-14 VELCRO	Fits 14W DROP
6,9	109630	SEAT PAN REAR 13-15 VELCRO	Fits 15W DROP
6,9	108146	SEAT PAN REAR 14 -16" VELCRO	Fits 14W STD or 16W DROP
6,9	109631	SEAT PAN REAR 15-17 VELCRO	Fits 15W STD or 17W DROP
6,9	108147	SEAT PAN REAR 16 -18" VELCRO	Fits 16W STD or 18W DROP
6,9	109632	SEAT PAN REAR 17-19 VELCRO	Fits 17W STD or 19W DROP
6,9	108148	SEAT PAN REAR 18 -20" VELCRO	Fits 18W STD or 20W DROP
6,9	109633	SEAT PAN REAR 19-21 VELCRO	Fits 19W STD or 21W DROP
6,9	108149	SEAT PAN REAR 20 -22" VELCRO	Fits 20W STD or 22W DROP
6,9	109634	SEAT PAN REAR 21-23 VELCRO	Fits 21W STD
6,9	108150	SEAT PAN REAR 22 -24" VELCRO	Fits 22W STD
		SEAT PAN ASSEMBLIES	
2,3,6-9	108594	SEAT PAN ONLY 12 -14" DOES NOT INCLUDE MOUNTING HDWR	Fits 14W DROP
2,3,6-9	109635	SEAT PAN ONLY 13-15" DOES NOT INCLUDE MOUNTING HDWR	Fits 15W DROP
2,3,6-9	108152	SEAT PAN ONLY 14 -16" DOES NOT INCLUDE MOUNTING HDWR	Fits 14W STD or 16W DROP
2,3,6-9	109636	SEAT PAN ONLY 15-17" DOES NOT INCLUDE MOUNTING HDWR	Fits 15W STD or 17W DROP
2,3,6-9	108153	SEAT PAN ONLY 16 -18" DOES NOT INCLUDE MOUNTING HDWR	Fits 16W STD or 18W DROP
2,3,6-9	109637	SEAT PAN ONLY 17-19" DOES NOT INCLUDE MOUNTING HDWR	Fits 17W STD or 19W DROP
2,3,6-9	108154	SEAT PAN ONLY 18 -20" DOES NOT INCLUDE MOUNTING HDWR	Fits 18W STD or 20W DROP
2,3,6-9	109638	SEAT PAN ONLY 19-21" DOES NOT INCLUDE MOUNTING HDWR	Fits 19W STD or 21W DROP
2,3,6-9	108155	SEAT PAN ONLY 20 -22" DOES NOT INCLUDE MOUNTING HDWR	Fits 20W STD or 22W DROP
2,3,6-9	109639	SEAT PAN ONLY 21-23" DOES NOT INCLUDE MOUNTING HDWR	Fits 21W STD
2,3,6-9	108156	SEAT PAN ONLY 22 -24" DOES NOT INCLUDE MOUNTING HDWR	Fits 22W STD
		KITS	
2,3,7	108151	SEAT PAN HDWR KIT	
1-5	108157	REG SEAT PAN MOUNTING KIT (4)	
2-4,7,10-11	108158	DROP SEAT PAN MOUNTING KIT (4)	

REG & DROP SEAT PAN MONO BACK

NOTE: Drop Seat Pan lowers seat 2" and does not work with Transit option, HD package or Contracture Footrest System.

NOTE: Seat Pans are adjustable 14 -22" Deep.

NOTE: If adding a seat pan to a chair with Single Post Armrest then a Kids Receiver must be utilized.

NOTE: If changing from a Drop Seat Pan to a Regular Seat Pan or Vise Versa a smaller or larger pan will be required, please refer to the remarks section for appropriate pan that will be required for desired width.

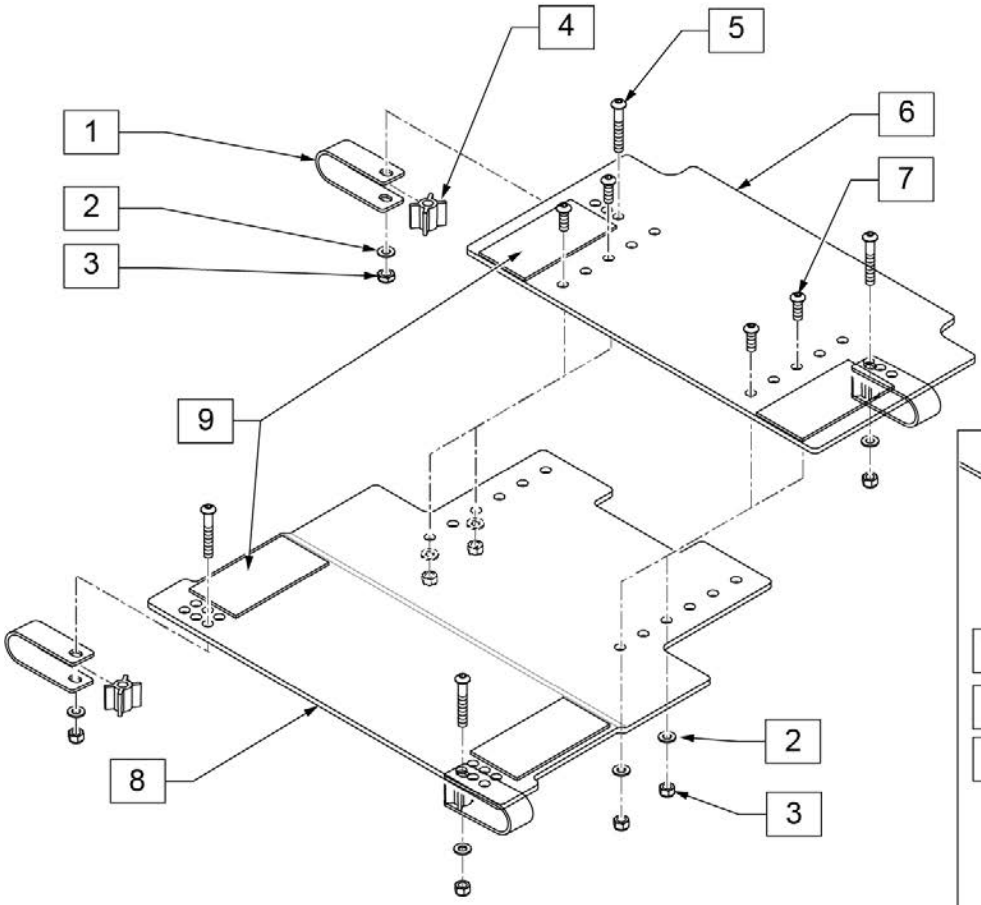

12 SEAT PAN HARDWARE KIT

ITEM #	ILLUSTRATION	DESCRIPTION	QTY
2		WASHER FLAT AN 5/16 ROHS	4
3		NUT NYLOCK THIN 5/16-18	4
5		BHCS 5/16-18 X 3/4 ROHS	4

13 REG SEAT PAN MOUNT KIT

ITEM #	ILLUSTRATION	DESCRIPTION	QTY
1		CLAMP SEAT PAN STD	4
2		WASHER FLAT AN 5/16 ROHS	4
3		NUT NYLOCK THIN 5/16-18	4
4		SPACER SEAT PAN	4
5		BHCS 5/16-18 X 3/4 ROHS	4

DROP SEAT PAN CLAMP ASSM

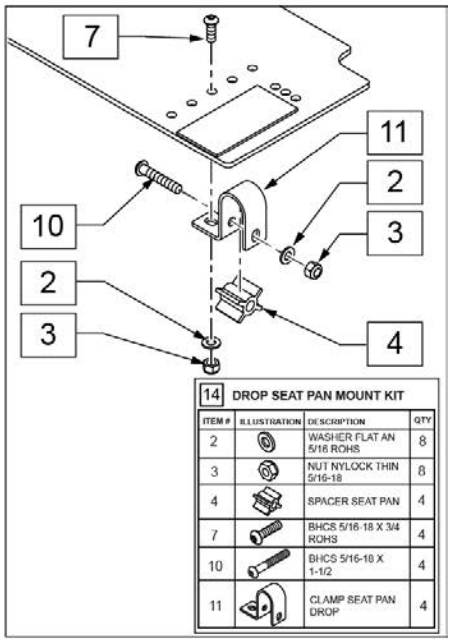

14 DROP SEAT PAN MOUNT KIT

ITEM #	ILLUSTRATION	DESCRIPTION	QTY
2		WASHER FLAT AN 5/16 ROHS	8
3		NUT NYLOCK THIN 5/16-18	8
4		SPACER SEAT PAN	4
7		BHCS 5/16-18 X 3/4 ROHS	4
10		BHCS 5/16-18 X 1-1/2	4
11		CLAMP SEAT PAN DROP	4

Pos.	Item Number	Description	Remarks
1	107073	CLAMP SEAT PAN STD	

Pos.	Item Number	Description	Remarks
2	106946	WASHER FLAT AN 5/16 ROHS	
3	106937	NUT NYLOCK THIN 5/16-18	
4	560771	SPACER SEAT PAN	
5	106982	BHCS 5/16 -18" x 1 3/4 SHLD ROHS	
7	106979	BHCS 5/16 -18" x 3/4 ROHS	
9	698057	2 x 4" HOOK PSA BLACK CUT	
10	106981	BHCS 5/16 -18 x 1 1/2 ROHS	
11	107074	CLAMP SEAT PAN DROP	
		FRONT SEAT PANS WITH VELCRO (No Mounting Hardware)	
8,9	108592	SEAT PAN FRONT 12-14 VELCRO	Fits 14W DROP
8,9	109625	SEAT PAN FRONT 13-15 VELCRO	Fits 15W DROP
8,9	108141	SEAT PAN FRONT 14 -16" VELCRO	Fits 14W STD or 16W DROP
8,9	109626	SEAT PAN FRONT 15-17 VELCRO	Fits 15W STD or 17W DROP
8,9	108142	SEAT PAN FRONT 16 -18" VELCRO	Fits 16W STD or 18W DROP
8,9	109627	SEAT PAN FRONT 17-19 VELCRO	Fits 17W STD or 19W DROP
8,9	108143	SEAT PAN FRONT 18 -20" VELCRO	Fits 18W STD or 20W DROP
8,9	109628	SEAT PAN FRONT 19-21 VELCRO	Fits 19W STD or 21W DROP
8,9	108144	SEAT PAN FRONT 20 -22" VELCRO	Fits 20W STD or 22W DROP
8,9	109629	SEAT PAN FRONT 21-23 VELCRO	Fits 21W STD
8,9	108145	SEAT PAN FRONT 22 -24" VELCRO	Fits 22W STD
		REAR SEAT PANS W/ VELCRO Short (No Mounting Hardware)	
6,9	135130	SEAT PAN REAR 12-14 SHRT	
6,9	135131	SEAT PAN REAR 13-15 SHRT	
6,9	135132	SEAT PAN REAR 14-16 SHRT	
6,9	135133	SEAT PAN REAR 15-17 SHRT	
6,9	135134	SEAT PAN REAR 16-18 SHRT	
6,9	135135	SEAT PAN REAR 17-19 SHRT	
6,9	135136	SEAT PAN REAR 18-20 SHRT	
6,9	135137	SEAT PAN REAR 19-21 SHRT	
6,9	135138	SEAT PAN REAR 20-22 SHRT	
6,9	135139	SEAT PAN REAR 21-23 SHRT	
6,9	135140	SEAT PAN REAR 22-24 SHRT	
		SEAT PAN ASSEMBLIES (No Mounting Hardware)	
2,3,6-9	135141	SEAT PAN SHORT ASSM ONLY 12-14	Short, Fits 14W DROP
2,3,6-9	135142	SEAT PAN SHORT ASSM ONLY 13-15	Short, Fits 15W DROP
2,3,6-9	135143	SEAT PAN SHORT ASSM ONLY 14-16	Short, Fits 14W STD or 16W DROP
2,3,6-9	135144	SEAT PAN SHORT ASSM ONLY 15-17	Short, Fits 15W STD or 17W DROP
2,3,6-9	135145	SEAT PAN SHORT ASSM ONLY 16 -18	Short, Fits 16W STD or 18W DROP
2,3,6-9	135146	SEAT PAN SHORT ASSM ONLY 17-19	Short, Fits 17W STD or 19W DROP
2,3,6-9	135147	SEAT PAN SHORT ASSM ONLY 18-20	Short, Fits 18W STD or 20W DROP
2,3,6-9	135148	SEAT PAN SHORT ASSM ONLY 19-21	Short, Fits 19W STD or 21W DROP
2,3,6-9	135149	SEAT PAN SHORT ASSM ONLY 20-22	Short, Fits 20W STD or 22W DROP
2,3,6-9	135150	SEAT PAN SHORT ASSM ONLY 21-23	Short, Fits 21W STD
2,3,6-9	135151	SEAT PAN SHORT ASSM ONLY 22-24	Short, Fits 22W STD
		HARDWARE KITS	
12	108151	SEAT PAN HDWR KIT	
13	108157	REG SEAT PAN MOUNTING KIT (4)	
14	108158	DROP SEAT PAN MOUNTING KIT (4)	

[09/2020] HEIGHT ADJ BACKREST W/ ADJ STROLLER HANDLE (PRIOR TO S/N IRS-007726 & IRSE-008701)

Note: for Tilt Cables and Triggers, please refer to "Tilt Handle & Cable.." parts manual pages.

Note: Replace in Pairs after S/N IRS-020876 & IRSE-028386

Note: if retrofitting Height Adj Backrest to a chair that has Dual Trigger Release, the appropriate Tilt Handle & Cable Assemblies are required.

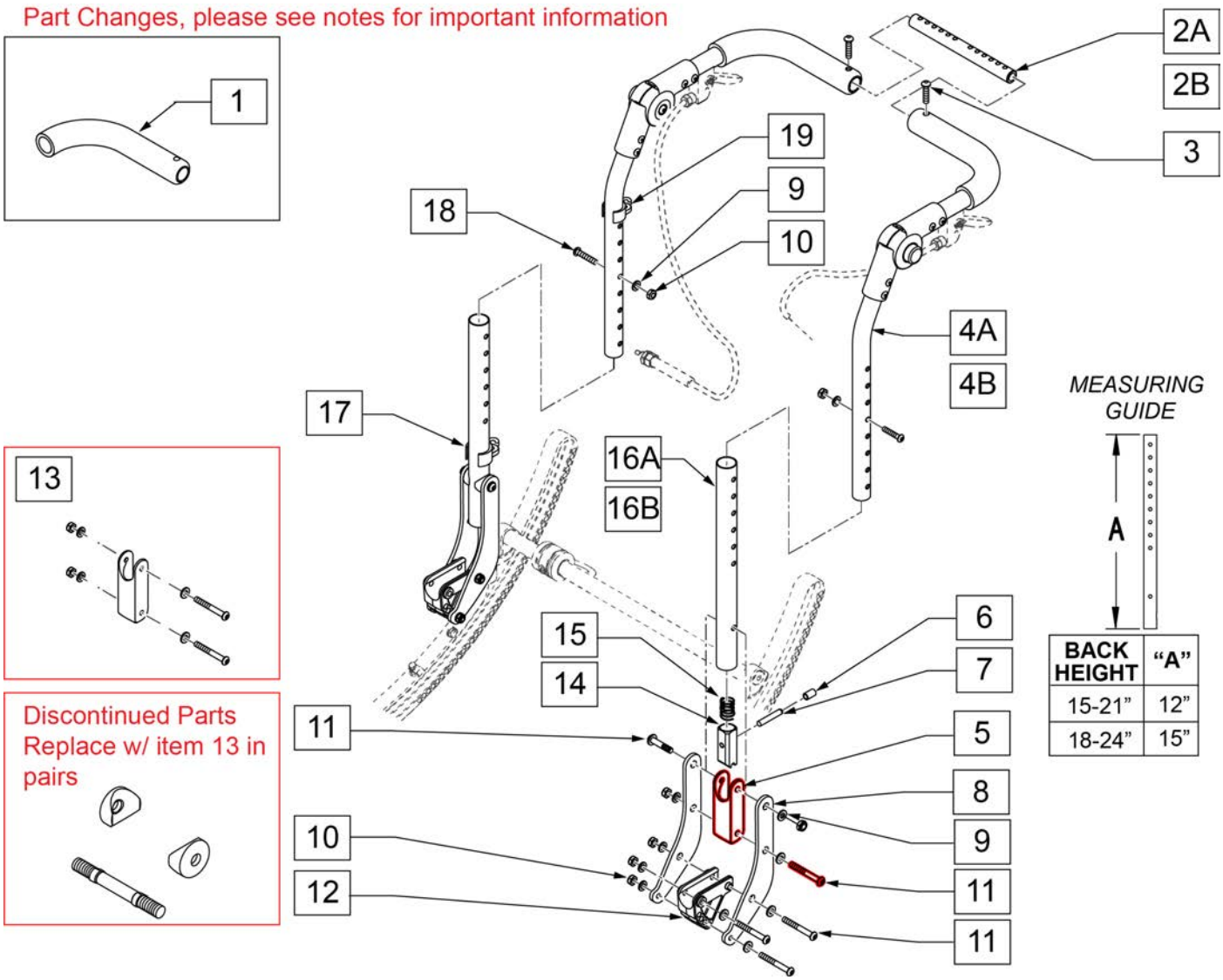

Pos.	Item Number	Description	Remarks
1	560638	FOAM GRIP .840 ID SHORT	
2A	521272	SHAFT GROWTH HANDLE 14 -19" WIDE	14 -19" SEAT WIDTH
2B	521392	SHAFT GROWTH HANDLE 17 -22" WIDE	17 -22" SEAT WIDTH

Pos.	Item Number	Description	Remarks
3	106960	BHCS 1/4 -28 x 7/8 ROHS	
4A	106725-001	BKRST HT ADJ UPPER ASSY R STD	STD PUSH HANDLE RIGHT
4A	106726-001	BKRST HT ADJ UPPER ASSY L STD	STD PUSH HANDLE LEFT
4B	106725-002	BKRST HT ADJ UPPER ASSY R EXT	LONG PUSH HANDLE RIGHT
4B	106726-002	BKRST HT ADJ UPPER ASSY L EXT	LONG PUSH HANDLE LEFT
5	124612	BLOCK-LATCH STOP	
6	126238	PUSH ON ROUND CAP	
7	481084	BACK REL PIN Z2/QT/EX	
8	126571	BACK PLATE PED ROUND	
9	106943	WASHER FLAT AN 1/4 ROHS	
10	106935	NUT NYLOCK THIN 1/4 -28 ROHS	
11	106965	BHCS 1/4 -28 x 2 SHLDR ROHS	
12	560517	BLOCK ANGLE BACKREST MOUNT	
13	126099	BACK REST SADDLE W/ HDWR PAIR	Pair-Replacement Latch Stop Kit
13	126100	BACK REST SADDLE W/ HDWR EACH	Each-Replacement Latch Stop Kit
14	560173	S-A LATCH .885 OD	
15	321110	S-A LATCH SPRING	
17	108134	CLIP CABLE 1" (10)	PACK OF 10
18	106961	BHCS 1/4 -28 x 1 1/4 ROHS	
19	108135	CLIP CABLE 7/8" (10)	PACK OF 10
16A,5, 8 -11	107259	HGT ADJ PH STD LOWER TUBE ASSM	RIGHT 15 -21" BACK HEIGHT
16A,5, 8 -11	107260	HGT ADJ PH STD LOWER TUBE ASSM	LEFT 15 -21" BACK HEIGHT
16B,5, 8 -11	107168	HGT ADJ PH STD LOWER TUBE ASSM	RIGHT 18 -24" BACK HEIGHT
16B,5, 8 -11	107169	HGT ADJ PH STD LOWER TUBE ASSM	LEFT 18 -24" BACK HEIGHT
1,2A,3,4A,9,10,18	108238	STROLLER HANDLE STD 14 -19" ASSM	14 -19" SEAT WIDTH- STD PUSH HANDLE
1,2B,3,4A,9,10,18	108239	STROLLER HANDLE STD 17 -22" ASSM	17 -22" SEAT WIDTH- STD PUSH HANDLE
1,2A,3,4B,9,10,18	108240	STROLLER HANDLE LONG 14 -19" ASSM	14 -19" SEAT WIDTH- LONG PUSH HANDLE
1,2B,3,4B,9,10,18	108241	STROLLER HANDLE LONG 17 -22" ASSM	17 -22" SEAT WIDTH- LONG PUSH HANDLE
1,2A,3,4A,5-19	108242	STROLLER STD 14 -19" STD LOWER TUBE	15 -21" BACK HGT, 14 - 19" SEAT WIDTH-STD PUSH HANDLE
1,2B,3,4A,5-19	108243	STROLLER STD 17 -22" STD LOWER TUBE	15 -21" BACK HGT, 17 - 22" SEAT WIDTH-STD PUSH HANDLE
1,2A,3,4B,5-19	108244	STROLLER LONG 14 -19" STD LOWER TUBE	15 -21" BACK HGT, 14 - 19" SEAT WIDTH- LONG PUSH HANDLE
1,2B,3,4B,5-19	108245	STROLLER LONG 17 -22" STD LOWER TUBE	15 -21" BACK HGT, 17 - 22" SEAT WIDTH- LONG PUSH HANDLE
1,2A,3,4A,5-19	108246	STROLLER STD 14 -19" TALL LOWER TUBE	18 -24" BACK HGT, 14 - 19" SEAT WIDTH-STD PUSH HANDLE
1,2B,3,4A,5-19	108247	STROLLER STD 17 -22" TALL LOWER TUBE	18 -24" BACK HGT, 17 - 22" SEAT WIDTH-STD PUSH HANDLE

Pos.	Item Number	Description	Remarks
1,2A,3,4B,5-19	108248	STROLLER LONG 14 -19" TALL LOWER TUBE	18 -24" BACK HGT, 14 - 19" SEAT WIDTH- LONG PUSH HANDLE
1,2B,3,4B,5-19	108249	STROLLER LONG 17 -22" TALL LOWER TUBE	18 -24" BACK HGT, 17 - 22" SEAT WIDTH- LONG PUSH HANDLE

HEIGHT ADJ BACKREST W/ ADJ STROLLER HANDLE (AFTER S/N IRS-007726 & IRSE-008701) (05/2017]

Note: Order cable assembly separately based on "Tilt Handle-Cable Assm for Height Adj Back" page.

Note: Order hardware for IRIS brackets based on "Back Plate Replacement Bolt Kit" page.

Note: Refer to "Dynamic Backrest" parts page for replacement back plates and Dynamic Backrest replacement parts.

Note: if retrofitting Height Adj Backrest to a chair that has Dual Trigger Release, the appropriate Tilt Handle & Cable Assemblies are required.

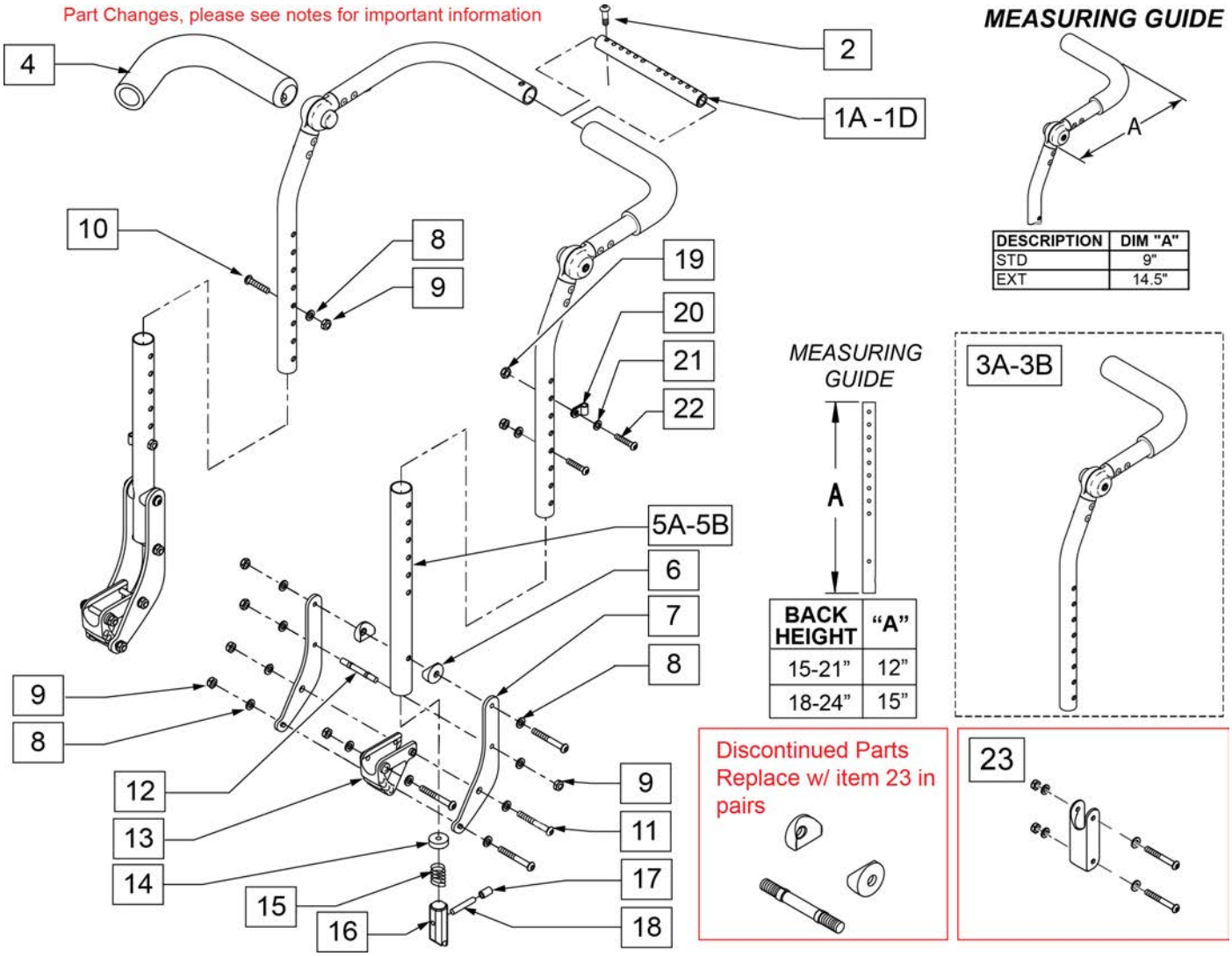

Pos.	Item Number	Description	Remarks
1A	050541-001	SHAFT GROWTH PED SHORT	Ped 10-14" Wide
1B	050541-002	SHAFT GROWTH PED MED	Ped 12-16" Wide

Pos.	Item Number	Description	Remarks
1C	521392	SHAFT GROWTH PED LONG	Ped 14-18" Wide-Adult 17-22" Wide
1D	521272	SHAFT GROWTH SHORT	Adult 14-19 Wide
2	106960	BHCS 1/4 -28 x 7/8 ROHS	
3A	110968-001	BACKREST UPPER HT ADJ R STD	RIGHT
3A	110969-001	BACKREST UPPER HT ADJ L STD	LEFT
3B	110968-002	BACKREST UPPER HT ADJ R EXT	RIGHT
3B	110969-002	BACKREST UPPER HT ADJ L EXT	LEFT
4	560638	FOAM GRIP .840 ID SHORT	
5A	520757	TUBE BACK FRAME LOWER	Std
5B	107171	TUBE BACK FRAME LOWER TALL	Tall
6	124612	BLOCK-LATCH STOP	
7	126571	BACK PLATE PED ROUND	
8	106943	WASHER FLAT AN 1/4 ROHS	
9	106935	NUT NYLOCK THIN 1/4 -28 ROHS	
10	107027	BHCS 1/4 -28 x 1 3/4 SHLDR ROHS	
11	106965	BHCS 1/4 -28 x 2 SHLDR ROHS	
12	481042	BACK REL STOP PIN QTS	
13	560517	BLOCK ANGLE BACKREST MOUNT	
14	483020	S/A SPRING RETAINER	
15	321110	S/A LATCH SPRING	
16	560173	S/A LATCH .885 OD	
17	126238	PUSH ON ROUND CAP	
18	481084	BACKREST RELEASE	
19	200100-QU	10-32 NYLOCK NUT	
20	349511	1/2 ID PLASTIC CLAMP BLK	
21	261204	#10 AN WASHER .063	
22	226032-QU	10-32 x 1 1/2 BH C/S BLK	
23	126099	BACK REST SADDLE W/ HDWR PAIR	Pair-Replacement Latch Stop Kit
23	126100	BACK REST SADDLE W/ HDWR EACH	Each-Replacement Latch Stop Kit
5A-9,11,12,14-18	107259	HT ADJ LWR TUBE STD ASSM R	RIGHT, 16-22" Tall
5A-9,11,12,14-18	107260	HT ADJ LWR TUBE STD ASSM L	LEFT, 16-22" Tall
5B-9,11,12,14-18	107168	HT ADJ LWRTBE TL ASM R	RIGHT,19-25" Tall
5B-9,11,12,14-18	107169	HT ADJ LWRTBE TL ASM L	LEFT,19-25" Tall
1D-3A,4-5A,6-22	118109	HT ADJ BCK ADULT STDSTD 14-19	
1C-3B,4-5A,6-22	118110	HT ADJ BCK ADULT STDEXT 14-19	
1D-3A,4-5B,6-22	118111	HT ADJ BCK ADULT TALSTD 14-19	
1C-3B,4-5B,6-22	118112	HT ADJ BCK ADULT TALEXT 14-19	
1D-3A,4-5A,6-22	118113	HT ADJ BCK ADULT STDSTD 17-22	
1C-3B,4-5A,6-22	118114	HT ADJ BCK ADULT STDEXT 17-22	
1D-3A,4-5B,6-22	118115	HT ADJ BCK ADULT TALSTD 17-22	
1C-3B,4-5B,6-22	118116	HT ADJ BCK ADULT TALEXT 17-22	

TILT HANDLE & CABLE FOR STROLLER HANDLE & RECLINING BACKREST [09/10/2019]

Note: see attachment in Informations Panel for cable installation instructions.

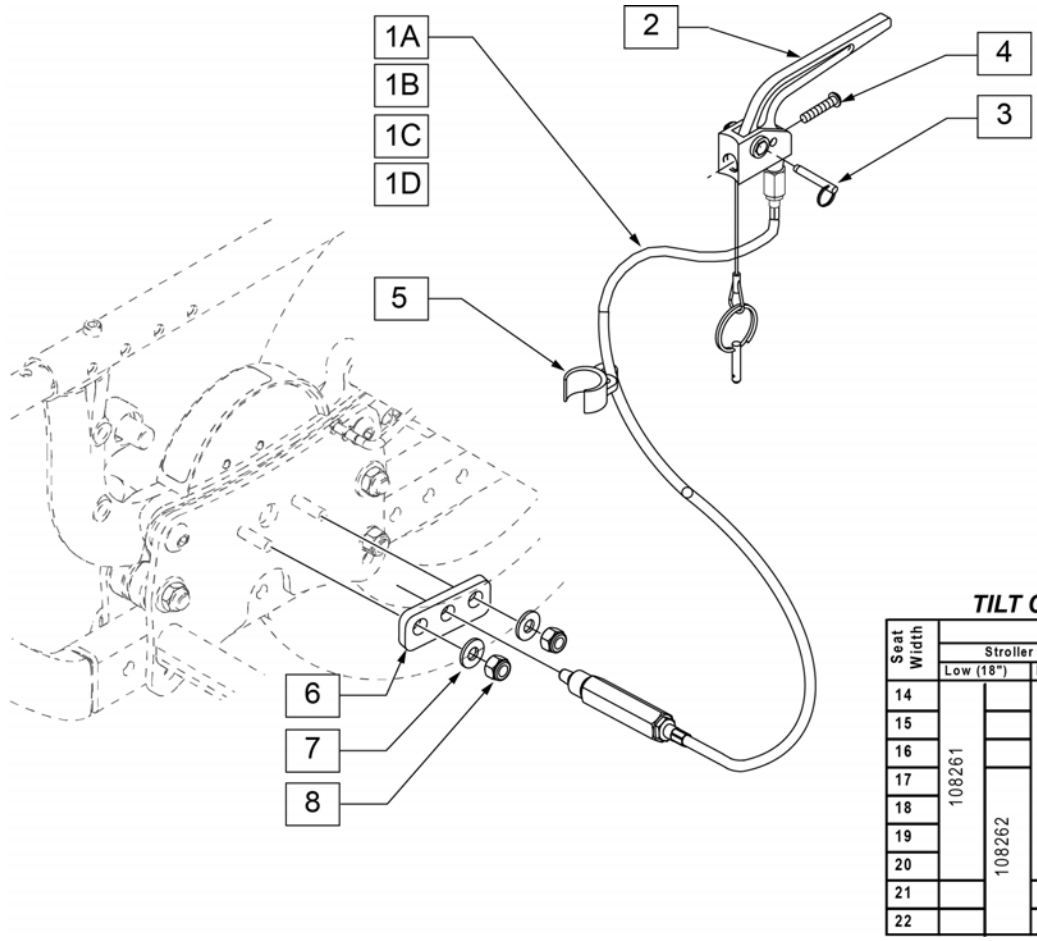

QUICKIE IRIS
TILT CABLE REFERENCE GUIDE

Seat Width	Backrest									
	Stroller Handle Backpost						Reclining Backrest			
	Low (18")		Med (21")		Tall (24")		Medium		Tall	
14	108261		108262		108263		108262		108263	
15										
16										
17		108262		108263		108264		108263		108264
18										
19										
20										
21										
22										

Pos.	Item Number	Description	Remarks
2,3	580110	CYL LOCK LEVER ASSM QT/QR/P5	
4	281120	10/32 x 5/8 PAN HD PHIL	
5	108134	CLIP CABLE 1" (10)	PACK OF 10
6	500698	PLATE PLUNGER ROLLER	
7	106945	WASHER FLAT SAE 1/4 ROHS	
8	106932	NUT NYLOCK 1/4 -20 ROHS	
1A-8	108261	PH MNT CABLE ASM SHT	51" LONG (SHORT)
1B-8	108262	PH MNT CABLE ASM MED	54" LONG (MEDIUM)
1C-8	108263	PH MNT CABLE ASM LONG	57" LONG (LONG)
1D-8	108264	PH MNT CABLE ASM X LONG	60" LONG (X-LONG)

TILT HANDLE & CABLE FOR HGT ADJ BACKREST

Note: see attachment in Informations Panel for cable installation instructions.

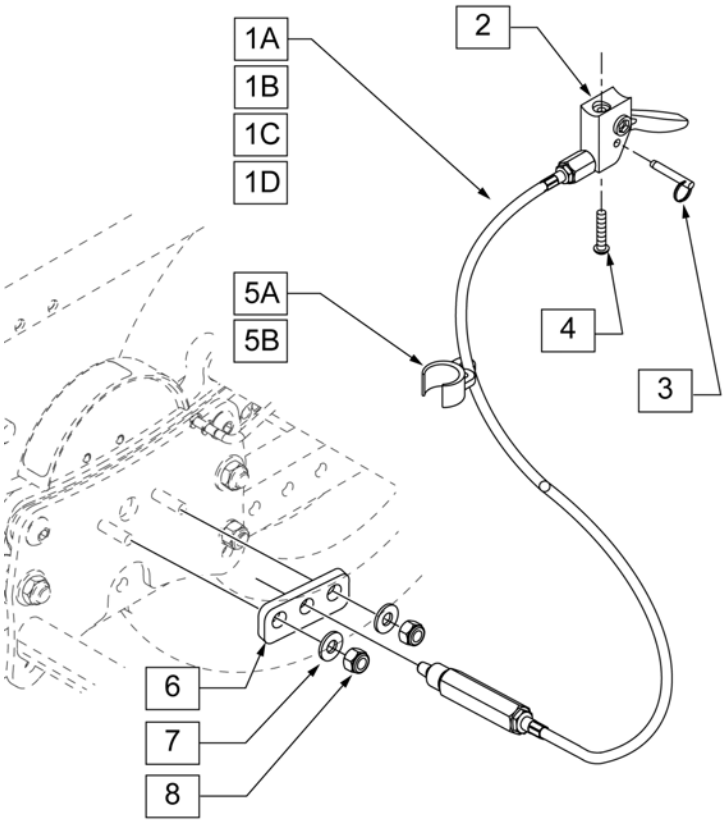

QUICKIE IRIS
TILT CABLE REFERENCE GUIDE

Seat Width	Backrest					
	Height Adj (Short or Long Push Handles)					
	Standard (15"-21")			Tall (18"-24")		
14	108269			108270		
15						
16		108270			108271	
17						
18			108271			
19						108272
20						
21						
22						

Pos.	Item Number	Description	Remarks
2,3	580109	PLUNGER PIN LEVER ASSM	
4	281120	10/32 x 5/8 PAN HD PHIL	
5A	108134	CLIP CABLE 1" (10)	PACK OF 10
5B	108135	CLIP CABLE 7/8" (10)	PACK OF 10
6	500698	PLATE PLUNGER ROLLER	
7	106945	WASHER FLAT SAE 1/4 ROHS	
8	106932	NUT NYLOCK 1/4 -20 ROHS	
1A-8	108269	HGT ADJ MNT CABLE ASM LNG	57" LONG (LONG)
1B-8	108270	HGT ADJ MNT CABLE ASM XL	60" LONG (X-LONG)
1C-8	108271	HGT ADJ MNT CABLE ASM 2XL	63" LONG (2XL-LONG)
1D-8	108272	HGT ADJ MNT CABLE ASM 3XL	66" LONG (3XL-LONG)

STROLLER HANDLE BACKPOSTS [09/2011]

Note: For Tilt Cables and Triggers, please refer to "Tilt Handle & Cable.." parts manual pages.

Note: Refer to "Dynamic Backrest" parts page for replacement back plates and Dynamic Backrest replacement parts.

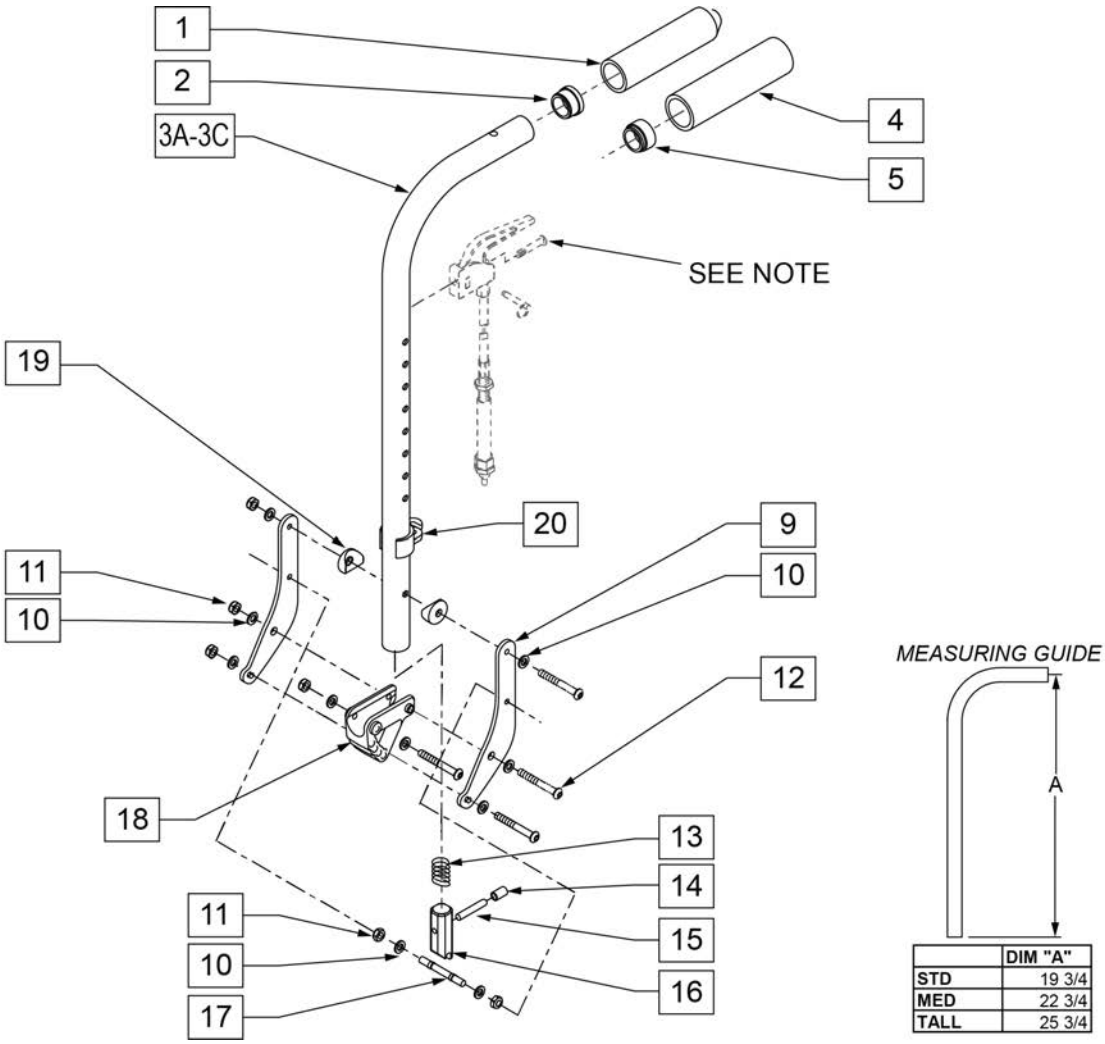

Pos.	Item Number	Description	Remarks
1	920027	QUICKIE GRIP 1" W/INSTR SHEET	
2	561002	1" INSERT PLUG .083	
1,2,3A	842080	STROLLER HANDLE W/ FOAM STANDARD ZPS/P5/QT	STD
1,2,3B	842079	STROLLER HANDLE W/ FOAM MED ZPS/QT	MED
1,2,3C	842081	STROLLER HANDLE W/ FOAM TALL ZPS/QT	TALL
4,5,3A	842067	EXT STROLLER HANDLE STANDARD	STD -USED W/ REMOVABLE STROLLER HANDLE EXT.
4,5,3B	842066	EXT STROLLER HANDLE MEDIUM	MED -USED W/ REMOVABLE STROLLER HANDLE EXT.
4,5,3C	842068	EXT STROLLER HANDLE TALL	TALL -USED W/ REMOVABLE STROLLER HANDLE EXT.
4	920023	QUICKIE GRIP 1" W/ HOLE W/ INSTRUCTIONS	USED W/ REMOVABLE STROLLER HANDLE EXT.
5	561082	1" TUBE END BUSHING THIN	USED W/ REMOVABLE STROLLER HANDLE EXT.
9	126571	BACK PLATE PED ROUND	

Pos.	Item Number	Description	Remarks
10	106943	WASHER FLAT AN 1/4 ROHS	
11	106935	NUT NYLOCK THIN 1/4 -28 ROHS	
12	106965	BHCS 1/4 -28 x 2 SHLDR ROHS	
13	321110	S/A LATCH SPRING	
14	126238	PUSH ON ROUND CAP	
15	481084	BACK REL PIN Z2/QT/EX	
16	483019	BACK RELEASE LATCH	
17	481042	BACK REL STOP PIN QTS	
18	560517	BLOCK ANGLE BACKREST MOUNT	
19	561004	1" SADDLE 1/4 HOLE	
20	108134	CLIP CABLE 1"	PACK OF 10
1,2,3A,9-20	108128	STROLLER W/ GRIP & HDWR STANDARD	STD
1,2,3B,9-20	108129	STROLLER W/ GRIP & HDWR MEDIUM	MED
1,2,3C,9-20	108130	STROLLER W/ GRIP & HDWR TALL	TALL
3A,4,5,9-20	108131	STROLLER W/ HOLE & HDWR STANDARD	USED W/ REMOVABLE STROLLER HANDLE EXT.
3B,4,5,9-20	108132	STROLLER W/ HOLE & HDWR MEDIUM	USED W/ REMOVABLE STROLLER HANDLE EXT.
SEE NOTE		Part SEE NOTE	
3C,4,5,9-20	108133	STROLLER W/ HOLE & HDWR TALL	USED W/ REMOVABLE STROLLER HANDLE EXT.

STROLLER HANDLE EXTENSION-REMOVABLE [09/2013]

NOTE: Stroller handle extension works with 1" tubing backrest only. Example: DAB on Q2 or Standard backrest on positioning chairs.

NOTE: Not compatible with Swing-Away Adjustable Stroller Handle.

Note: For Q2X S/N chairs this is an "Off Chair" option only.

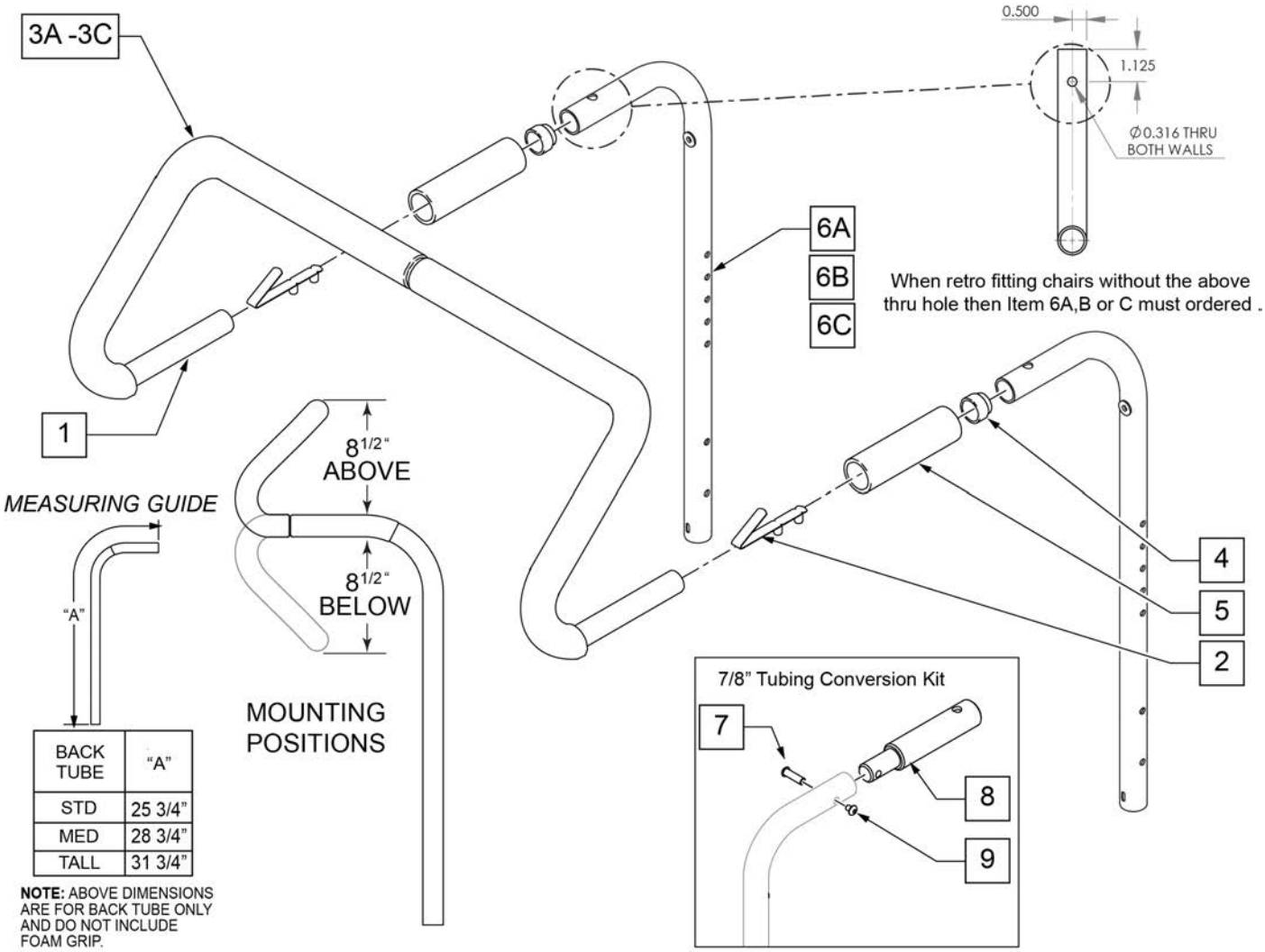

Pos.	Item Number	Description	Remarks
2	301108	5/16 SNAP BUTTON DUAL ONE SIDE	
3A	560615	STROLLER EXTENSION GRIP 10 -13"	10 -13" WIDE
3B	560616	STROLLER EXTENSION GRIP 14 -17"	14 -17" WIDE
3C	560617	STROLLER EXTENSION GRIP 18 -20"	18 -20" WIDE
4	561082	1" TUBE END BUSHING THIN	
5	920023	QUICKIE GRIP 1 W/ HOLE	
1, 2, 3A	842050	STROLLER EXTENSION ASSM 10"	

Pos.	Item Number	Description	Remarks
1, 2, 3A	842051	STROLLER EXTENSION ASSM 11"	
1, 2, 3A	842052	STROLLER EXTENSION ASSM 12"	
1, 2, 3A	842053	STROLLER EXTENSION ASSM 13"	
1, 2, 3B	842054	STROLLER EXTENSION ASSM 14"	
1, 2, 3B	842055	STROLLER EXTENSION ASSM 15"	
1, 2, 3B	842056	STROLLER EXTENSION ASSM 16"	
1, 2, 3B	842057	STROLLER EXTENSION ASSM 17"	
1, 2, 3C	842058	STROLLER EXTENSION ASSM 18"	
1, 2, 3C	842059	STROLLER EXTENSION ASSM 19	
1, 2, 3C	842063	STROLLER EXTENSION ASSM 20	
6A	842067	EXT STROLLER HANDLE STD	STANDARD/LOW
6B	842066	EXT STROLLER HANDLE MED	MEDIUM
6C	842068	EXT STROLLER HANDLE TALL	TALL
7-9	125324	STRLLR HNDL CNVERSN KIT 7/8 PH	To fit to 7/8" Push Handle; includes hardware for both sides

Note: only for chairs with 40 degree Tilt Range.

Note: for Tilt Cables and Triggers, refer to TILT HANDLE & CABLE parts pages.

Note: for Iris chairs S/N Prefix IRS & IRSE only, and SR45 chairs.

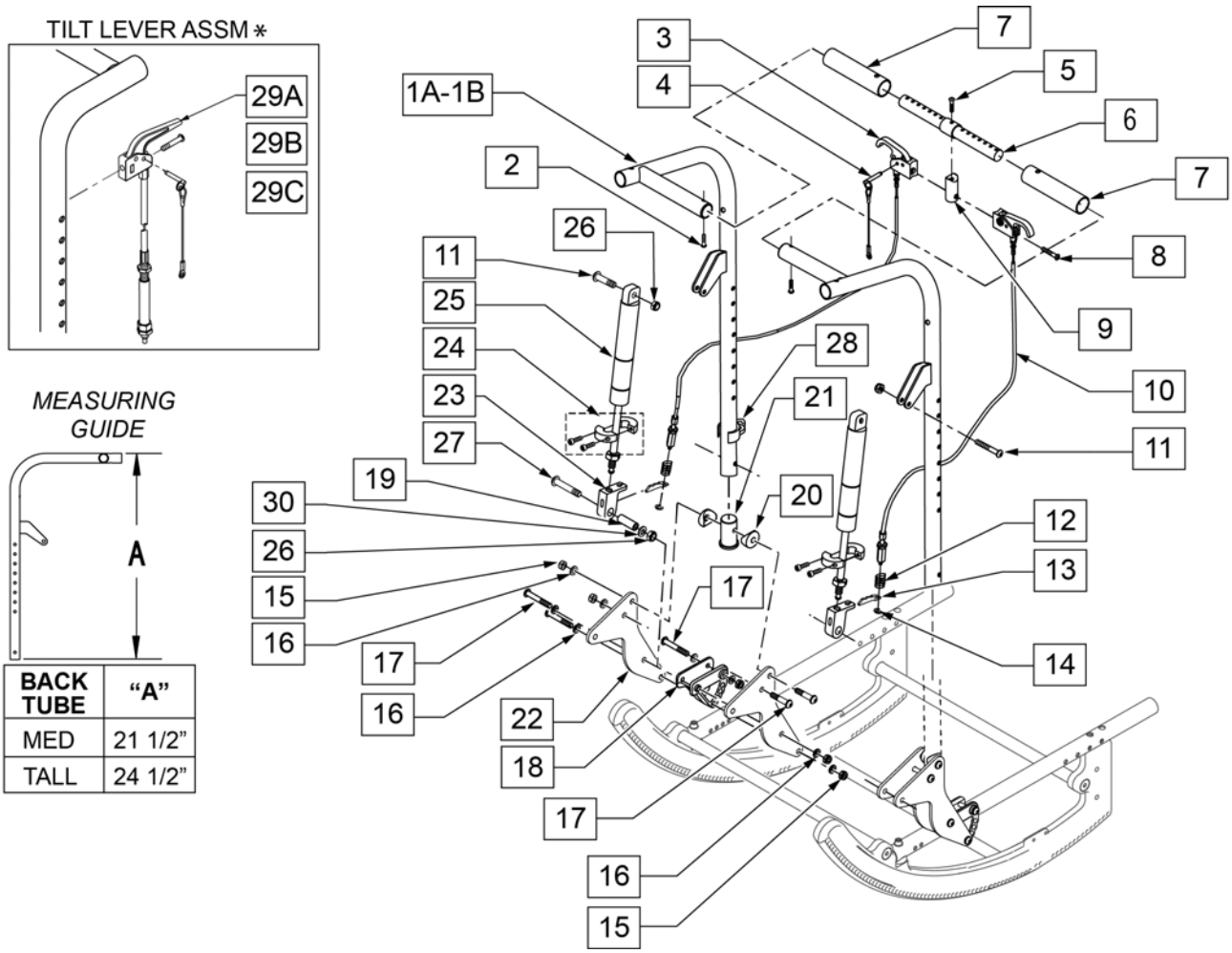

BACK TUBE	"A"
MED	21 1/2"
TALL	24 1/2"

Pos.	Item Number	Description	Remarks
1A	105869-001	WELDMOUNT WIDTH ADJ RECLINING BACK -MED	Right
1A	105870-001	WELDMOUNT WIDTH ADJ RECLINING BACK -MED	Left
1B	105869-002	WELDMOUNT WIDTH ADJ RECLINING BACK -TALL	Right
1B	105870-002	WELDMOUNT WIDTH ADJ RECLINING BACK -TALL	Left
2	106960	BHCS 1/4 -28 x 7/8 ROHS	
3,4	580111	CYLINDER LOCK LEVER ASSM RECLINER	Recline Handle
4	349021	TRIGGER RELEASE PIN TS/QT/P5	

Pos.	Item Number	Description	Remarks
5	106981	5/16 -18 x 1 1/2 BH C/S	
6	507310	ADJUSTABLE BAR RELCINING BACK	
7	560664	FOAM GRIP RECLINING BACK QTS	
8	281120	10-32 x 5/8 PAN HD PHIL	
9	483139	T45 RELEASE LEVER MOUNTING BLOCK	
10	342057	CYLINDER LOCK CABLE ASSM	Recline Cable
11	106980	5/16 -18 x 1 1/4 BH C/S	
12	321141	.650L x 6 COIL SPRING	
13	560686	GAS SPRING LEVER T45	
14	342000	1/4 E-CLIP	
15	106935	NUT NYLOCK THIN 1/4 -28 ROHS	
16	106943	WASHER FLAT AN 1/4 ROHS	See BACK PLATE REPLACEMENT BOLT KIT page
17	106965	BHCS 1/4 -28 x 2 SHLDR ROHS	See BACK PLATE REPLACEMENT BOLT KIT page
18	560517	BLOCK ANGLE BACKREST MOUNT	
19	483179	RECLINING BACK PIVOT STUD QTS	
20	561004	1 SADDLE 1/4 HOLE	
21	483169	RECLINING BACK TUBE PLUG QTS	
22	105867	PLATE BACK RECLINE	
23	483147	T45 GAS SPRING BLOCK	
24	342049	10mm ID SPLIT COLLAR	
25	342065	BLOC-O-LIFT 200N x 11.58	
26	202117	5/16-18 NYLOCK NUT THICK BLK	
27	106983	BHCS 5/16 -18 x 2 SHLDR ROHS	
28	108134	CLIP CABLE 1" (10)	Pack of 10
29A	108262	PH MNT CABLE ASM MED W/ INSTRU.	see TILT HANDLE & CABLE page for Ref. Guide
29B	108263	PH MNT CABLE ASM LNG W/ INSTRU.	see TILT HANDLE & CABLE page for Ref. Guide
29C	108264	PH MNT CABLE ASM XL W/ INSTRU.	see TILT HANDLE & CABLE page for Ref. Guide
30	106946	WASHER FLAT AN 5/16 ROHS	
1A-27	108126	RECLINING BACK RETRO KIT MED	
1B-27	108127	RECLINING BACK RETRO KIT TALL	
1A,7,11,13,15-17,19-27	107253-001	BKRST RECL ASSY R MED	Right; Med
1A,7,11,13,15-17,19-27	107254-001	BKRST RECL ASSY L MED	Left; Med
1B,7,11,13,15-17,19-27	107253-002	BKRST RECL ASSY R TALL	Right; Tall
1B,7,11,13,15-17,19-27	107254-002	BKRST RECL ASSY L TALL	Left; Tall

NOTE: FOR TILT CABLES AND TRIGGERS, PLEASE REFER TO "TILT HANDLE & CABLE" PARTS PAGES

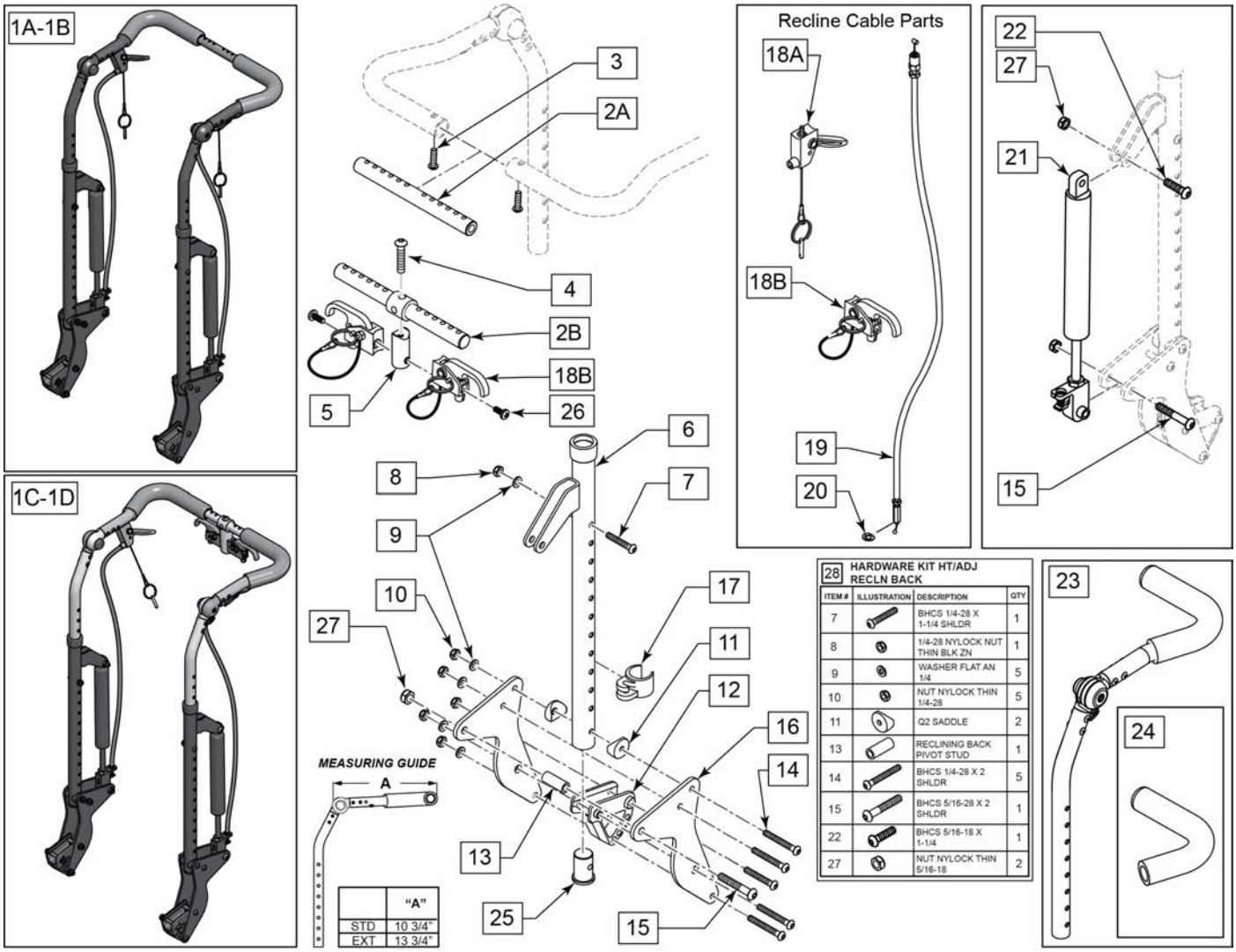

Pos.	Item Number	Description	Remarks
		Standard Stroller Handle extension w/Foot Tilt Release	
1A	243350	HT ADJ STL HL MED STD FOOT 10	
1A	243351	HT ADJ STL HL MED STD FOOT 11	
1A	243352	HT ADJ STL HL MED STD FOOT 12	
1A	243353	HT ADJ STL HL MED STD FOOT 13	
1A	243354	HT ADJ STL HL MED STD FOOT 14	
1A	243355	HT ADJ STL HL MED STD FOOT 15	
1A	243356	HT ADJ STL HL MED STD FOOT 16	
1A	243357	HT ADJ STL HL MED STD FOOT 17	
1A	243358	HT ADJ STL HL MED STD FOOT 18	
1A	243359	HT ADJ STL HL MED STD FOOT 19	
1A	243361	HT ADJ STL HL MED STD FOOT 20	
1A	243362	HT ADJ STL HL MED STD FOOT 21	

Pos.	Item Number	Description	Remarks
1A	243364	HT ADJ STL HL MED STD FOOT 22	
		Long Stroller Handle extension w/Foot Tilt Release	
1B	243360	HT ADJ STL HL MED LNG FOOT 10	
1B	243363	HT ADJ STL HL MED LNG FOOT 11	
1B	243365	HT ADJ STL HL MED LNG FOOT 12	
1B	243366	HT ADJ STL HL MED LNG FOOT 13	
1B	243367	HT ADJ STL HL MED LNG FOOT 14	
1B	243368	HT ADJ STL HL MED LNG FOOT 15	
1B	243369	HT ADJ STL HL MED LNG FOOT 16	
1B	243370	HT ADJ STL HL MED LNG FOOT 17	
1B	243371	HT ADJ STL HL MED LNG FOOT 18	
1B	243372	HT ADJ STL HL MED LNG FOOT 19	
1B	243373	HT ADJ STL HL MED LNG FOOT 20	
1B	243374	HT ADJ STL HL MED LNG FOOT 21	
1B	243375	HT ADJ STL HL MED LNG FOOT 22	
		Standard Stroller Handle extension Dual Trigger Tilt Release	
1C	243377	HT ADJ STL HL MED STD DTRG 11	
1C	243378	HT ADJ STL HL MED STD DTRG 12	
1C	243379	HT ADJ STL HL MED STD DTRG 13	
1C	243380	HT ADJ STL HL MED STD DTRG 14	
1C	243381	HT ADJ STL HL MED STD DTRG 15	
1C	243382	HT ADJ STL HL MED STD DTRG 16	
1C	243383	HT ADJ STL HL MED STD DTRG 17	
1C	243384	HT ADJ STL HL MED STD DTRG 18	
1C	243385	HT ADJ STL HL MED STD DTRG 19	
1C	243386	HT ADJ STL HL MED STD DTRG 20	
1C	243387	HT ADJ STL HL MED STD DTRG 21	
1C	243388	HT ADJ STL HL MED STD DTRG 22	
		Long Stroller Handle extension Dual Trigger Tilt Release	
1D	243391	HT ADJ STL HL MED LNG DTRG 11	
1D	243392	HT ADJ STL HL MED LNG DTRG 12	
1D	243393	HT ADJ STL HL MED LNG DTRG 13	
1D	243394	HT ADJ STL HL MED LNG DTRG 14	
1D	243395	HT ADJ STL HL MED LNG DTRG 15	
1D	243396	HT ADJ STL HL MED LNG DTRG 16	
1D	243397	HT ADJ STL HL MED LNG DTRG 17	
1D	243398	HT ADJ STL HL MED LNG DTRG 18	
1D	243399	HT ADJ STL HL MED LNG DTRG 19	
1D	243400	HT ADJ STL HL MED LNG DTRG 20	
1D	243402	HT ADJ STL HL MED LNG DTRG 21	
1D	243403	HT ADJ STL HL MED LNG DTRG 22	
2A,3	161542	SHAFT GROWTH HANDLE KIT SHRT	10-18W - Use when Foot Release Tilt is used on chair
2A,3	161543	SHAFT GROWTH HANDLE KIT LNG	19-22W - Use when Foot Release Tilt is used on chair

Pos.	Item Number	Description	Remarks
2A	243026	RCLN CNTR BAR ADJ STRLLR 10-18	Use when Dual Trigger Tilt release is used on chair
2B	243027	RCLN CNTR BAR ADJ STRLLR 15-23	Use when Dual Trigger Tilt release is used on chair
2B,4,5,18B,26	161547	DUAL TRIGGER ASSM 10-16 W	11-16 Use when Dual Trigger Tilt release is used on chair
2B,4,5,18B,26	163660	DUAL TRIGGER ASSM 17-22 W	17-22 Use when Dual Trigger Tilt release is used on chair
4	106981	BHCS 5/16-18 X 1 1/2	
5	483139	T45 RELEASE LEVER MNTG BLOCK	
9	106943	WASHER FLAT AN 1/4 ROHS	SEE 'BACK PLATE REPLACEMENT BOLT KIT' PAGE
10	106935	NUT NYLOCK THIN 1/4 -28 ROHS	
11	561004	1 SADDLE 1/4 HOLE	
12	560517	BLOCK ANGLE BACKREST MOUNT	
13	483179	RECLINING BACK PIVOT STUD QTS	
14	106965	BHCS 1/4 -28 x 2 SHLDR ROHS	See 'BACK PLATE REPLACEMENT BOLT KIT' pg for more options
15	106983	BHCS 5/16 -18 x 2 SHLDR ROHS	
16	105867	PLATE BACK RECLINE	
17	108134	CLIP CABLE 1" (10)	PACK OF 10
19	342057	CYLINDER LOCK CABLE ASSM	RECLINE CABLE
20	342000	1/4 E-CLIP	
22	106980	5/16 -18 x 1 1/4 BH C/S	
23	110962-001	BKRST UPPER HT ADJ PED R STD	std- 10-14 wide
23	110962-002	BKRST UPPER HT ADJ PED R EXT	long- 10-14 wide

Pos.	Item Number	Description	Remarks
23	110963-001	BKRST UPPER HT ADJ PED L STD	std- 10-14 wide
23	110963-002	BKRST UPPER HT ADJ PED L EXT	long- 10-14 wide
23	110968-001	BKRST UPPER HT ADJ R STD	std-15-22 wide
23	110968-002	BKRST UPPER HT ADJ R EXT	long-15-22 wide
23	110969-001	BKRST UPPER HT ADJ L STD	std-15-22 wide
23	110969-002	BKRST UPPER HT ADJ L EXT	long-15-22 wide
24	560664	FOAM GRIP RECLINING BACK QTS	
25	244139	HT ADJ RCLN TUBE PLUG	
26	281120	10-32 x 5/8 PAN HD PHIL	
27	106937	NUT NYLOCK THIN 5/16-18	
28	161546	HARDWARE KIT HT/ADJ RECLN BK	
15,21,22,27	161544	GAS SPRING REPLACEMENT ASSM	
18A,19	161545	RECLINE LEVER W/CABLE	Use when Foot Release Tilt is used on chair
18B,19	580111	CYL LOCK LEVER ASSM RCLNR	Use when Dual Trigger Tilt release is used on chair

1 BACK PLATE BOLT KIT

ILLUSTRATION	DESCRIPTION	QTY
	BHCS 1/4-28 X 2 SHLDR	4
	BHCS 1/4-28 X 2-1/4 SHLDR	4
	BHCS 1/4-28 X 2-1/2 SHLDR	4

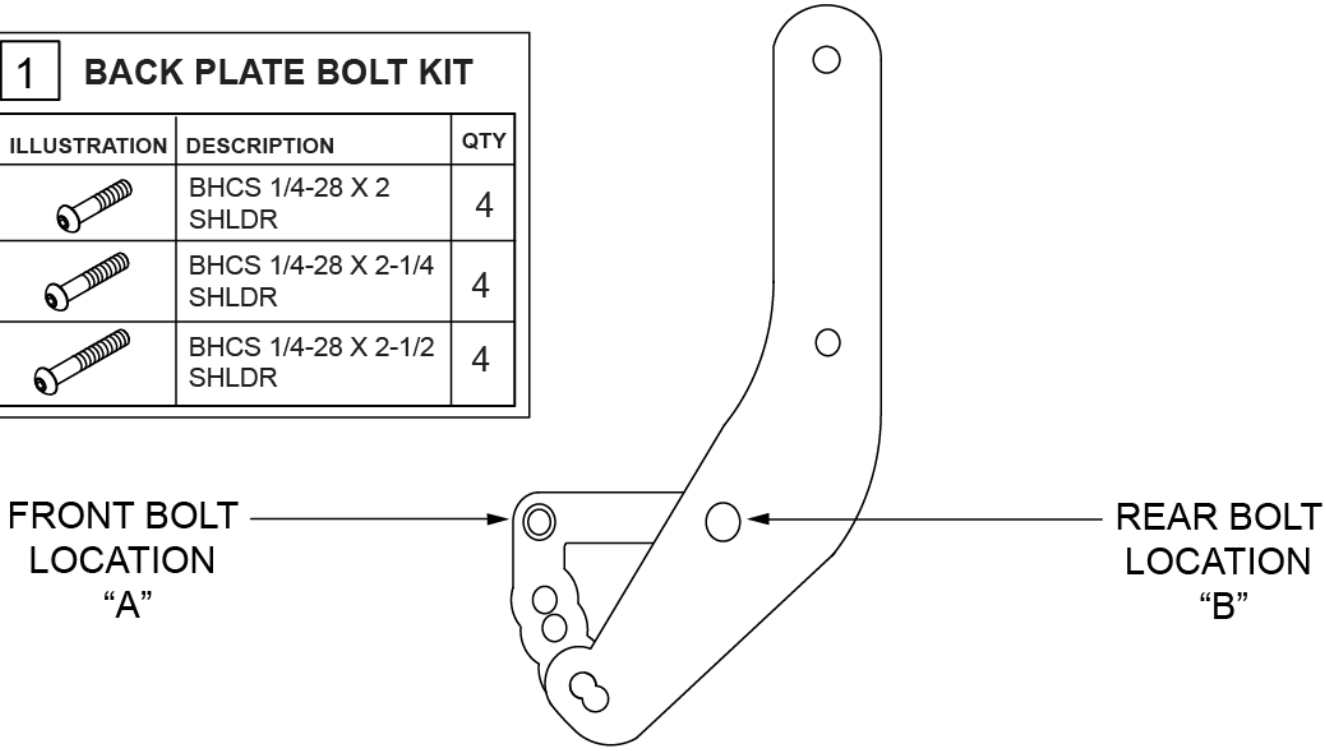

NOTE: BOLT QUANTITIES ARE 2 PER SIDE

BACK PLATE BOLT KIT REFERENCE GUIDE

ACCESSORY TYPE	BOLT LENGTH AND PART NUMBER		
	2"	2 1/4"	2 1/2"
	106965	106966	106967
DUAL POST FIXED			AB
W/O DUAL POST	AB		
DUAL POST FLIP		A	B

Pos.	Item Number	Description	Remarks
1	108125	BACK PLATE REPLACEMENT BOLT KIT	CONTAINS ALL HDWR REQUIRED REGARDLESS OF ARMREST TYPE.

DYNAMIC BACK

Note: If retro fitting Dynamic Backrest onto chairs built prior to August 2011, a new rear seat pan must be purchased.

Note: Dynamic Back is not available with Recline Back option or 19"-22" seat depths; contact Built for Me if chair is combined with these options.

Note: Kits 119435-119438 and 119439-119444 Blue elastomer installed; Red, Green & Black available separately.

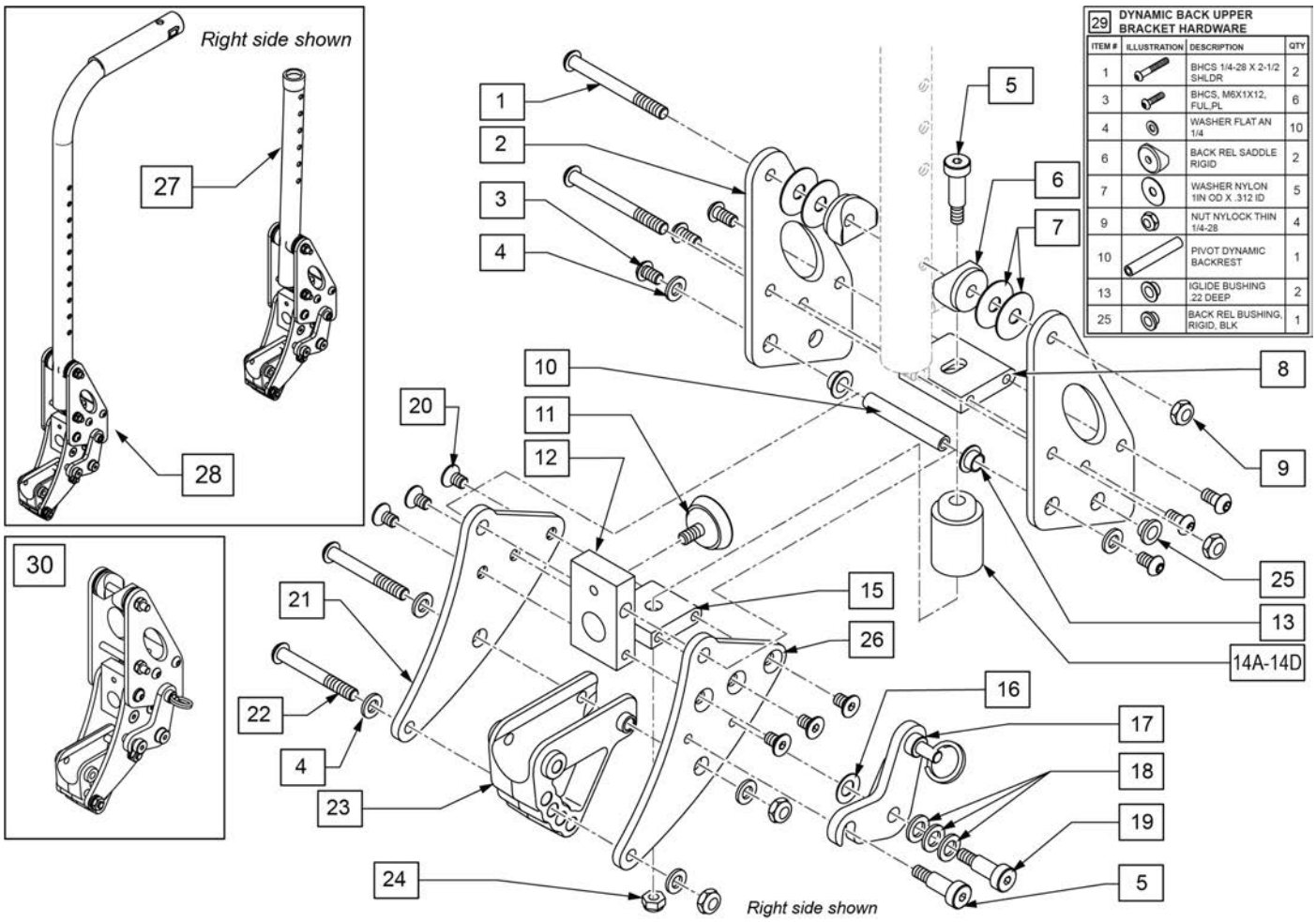

Pos.	Item Number	Description	Remarks
1	106967	BHCS 1/4-28 X 2-1/2 SHLDR ROHS	
3	103185-005	BHCS M6 X 1 X 12 FULL PL	
4	106943	WASHER FLAT AN 1/4 ROHS	
5	011649-003	SHLDR SCREW M6 X 8MM OD X 45MM	
6	561087	BACK REL SADDLE RIGID	
7	113268	WASHER NYLON 1IN OD X .312 ID	
9	106935	NUT NYLOCK THIN 1/4-28 ROHS	
10	119410	PIVOT DYNAMIC BACKREST	

Pos.	Item Number	Description	Remarks
11	349560	ZP RUBBER STOP	
13	119418	IGLIDE BUSHING .22 DEEP	
14A	124044	SOFT RED SUSPENSION KIT	Pair, includes 2 elastomers
14B	124060	MED BLUE SUSPENSION KIT	Pair, includes 2 elastomers
14C	124064	FIRM GREEN SUSPENSION KIT	Pair, includes 2 elastomers
14D	124082	X-FIRM BLACK SUSPENSION KIT	Pair, includes 2 elastomers
16	262134	5/16 WASHER SPRING DISC	
18	106947	WASHER FLAT THIN AN 5/16 ROHS	
19	011649-001	SHLDR SCREW 8MM OD X 16MM LG	
20	013450	FHCS M6 X 1 X 10MM W/PCH	
21	119416	RH ASSM LOWER OUTER BACK PLATE	Right side assembly
21	119417	LH ASSM LOWER OUTER BACK PLATE	Left side assembly
22	106965	BHCS 1/4-28 X 2 SHLDR ROHS	
23	560517	BLOCK ANGLE BACKREST MOUNT	
24	104381	NUT HEX NYLOCK M6X1.0	
26	119414	RH ASSM LOWER INNER BACK PLATE	Right side assembly
26	119415	LH ASSM LOWER INNER BACK PLATE	Left side assembly
27	119435	DYNMC BACK ASSM STD HGT ADJ RH	See Elastomer note; Fixed Height Stroller
27	119436	DYNMC BACK ASSM STD HGT ADJ LH	See Elastomer note; Fixed Height Stroller
27	119437	DYNMC BACK ASSM TLL HGT ADJ RH	See Elastomer note; Fixed Height Stroller
27	119438	DYNMC BACK ASSM TLL HGT ADJ LH	See Elastomer note; Fixed Height Stroller
28	119439	DYNMC BACK STR EXT ASSM STD RH	See Elastomer note; Fixed Height Stroller & used w/ Removable Stroller Handle Ext

Pos.	Item Number	Description	Remarks
28	119440	DYNMC BACK STR EXT ASSM STD LH	See Elastomer note; Fixed Height Stroller & used w/ Removable Stroller Handle Ext
28	119441	DYNMC BACK STR EXT ASSM MED RH	See Elastomer note; Fixed Height Stroller & used w/ Removable Stroller Handle Ext
28	119442	DYNMC BACK STR EXT ASSM MED LH	See Elastomer note; Fixed Height Stroller & used w/ Removable Stroller Handle Ext
28	119443	DYNMC BACK STR EXT ASSM TLL RH	See Elastomer note; Fixed Height Stroller & used w/ Removable Stroller Handle Ext
28	119444	DYNMC BACK STR EXT ASSM TLL LH	See Elastomer note; Fixed Height Stroller & used w/ Removable Stroller Handle Ext
29	161928	DYNAMIC BACK UPPER BRACKET HDW	
30	126247	DYNAMIC BACKREST ASSM RH	Blue elastomer installed, Red,Green&Black included
30	126248	DYNAMIC BACKREST ASSM LH	Blue elastomer installed, Red,Green&Black included
16-19,24,25	120943	DB LATCH REPLACEMENT KIT	Left & Right

REG & DROP SEAT PAN MONO BACK

[02/24/2020]

NOTE: Drop Seat Pan lowers seat 2" and does not work with Transit option, HD package or Contracture Footrest System.

NOTE: Seat Pans are adjustable 14 -22" Deep.

NOTE: If adding a seat pan to a chair with Single Post Armrest then a Kids Receiver must be utilized.

NOTE: If changing from a Drop Seat Pan to a Regular Seat Pan or Vise Versa a smaller or larger pan will be required, please refer to the remarks section for appropriate pan that will be required for desired width.

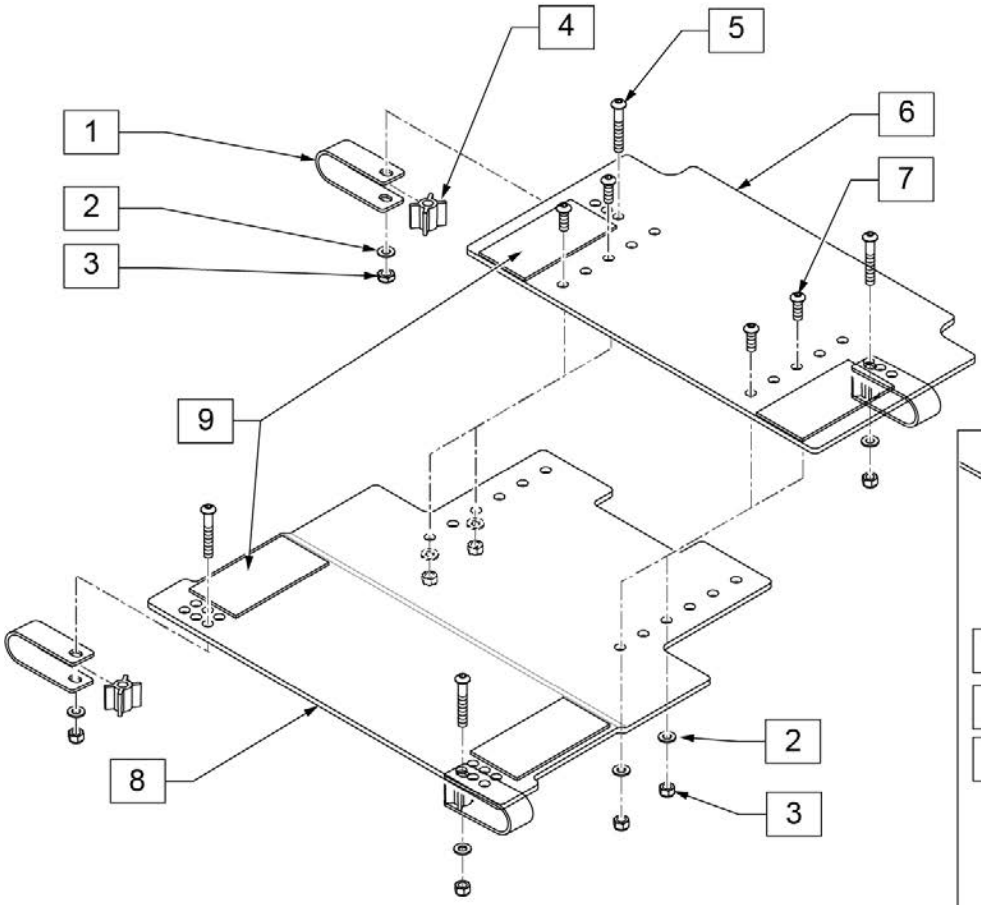

12 SEAT PAN HARDWARE KIT

ITEM #	ILLUSTRATION	DESCRIPTION	QTY
2		WASHER FLAT AN 5/16 ROHS	4
3		NUT NYLOCK THIN 5/16-18	4
5		BHCS 5/16-18 X 3/4 ROHS	4

13 REG SEAT PAN MOUNT KIT

ITEM #	ILLUSTRATION	DESCRIPTION	QTY
1		CLAMP SEAT PAN STD	4
2		WASHER FLAT AN 5/16 ROHS	4
3		NUT NYLOCK THIN 5/16-18	4
4		SPACER SEAT PAN	4
5		BHCS 5/16-18 X 3/4 ROHS	4

DROP SEAT PAN CLAMP ASSM

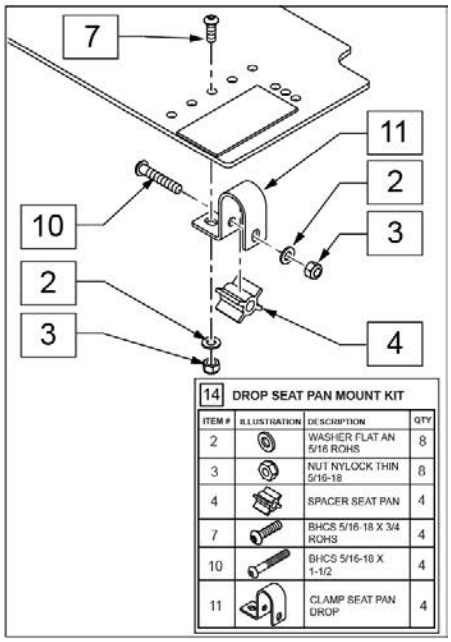

14 DROP SEAT PAN MOUNT KIT

ITEM #	ILLUSTRATION	DESCRIPTION	QTY
2		WASHER FLAT AN 5/16 ROHS	8
3		NUT NYLOCK THIN 5/16-18	8
4		SPACER SEAT PAN	4
7		BHCS 5/16-18 X 3/4 ROHS	4
10		BHCS 5/16-18 X 1-1/2	4
11		CLAMP SEAT PAN DROP	4

Pos.	Item Number	Description	Remarks
1	107073	CLAMP SEAT PAN STD	

Pos.	Item Number	Description	Remarks
2	106946	WASHER FLAT AN 5/16 ROHS	
3	106937	NUT NYLOCK THIN 5/16-18	
4	560771	SPACER SEAT PAN	
5	106982	BHCS 5/16 -18" x 1 3/4 SHLD ROHS	
7	106979	BHCS 5/16 -18" x 3/4 ROHS	
9	698057	2 x 4" HOOK PSA BLACK CUT	
10	106981	BHCS 5/16 -18 x 1 1/2 ROHS	
11	107074	CLAMP SEAT PAN DROP	
		FRONT SEAT PANS WITH VELCRO (No Mounting Hardware)	
8,9	108592	SEAT PAN FRONT 12-14 VELCRO	Fits 14W DROP
8,9	109625	SEAT PAN FRONT 13-15 VELCRO	Fits 15W DROP
8,9	108141	SEAT PAN FRONT 14 -16" VELCRO	Fits 14W STD or 16W DROP
8,9	109626	SEAT PAN FRONT 15-17 VELCRO	Fits 15W STD or 17W DROP
8,9	108142	SEAT PAN FRONT 16 -18" VELCRO	Fits 16W STD or 18W DROP
8,9	109627	SEAT PAN FRONT 17-19 VELCRO	Fits 17W STD or 19W DROP
8,9	108143	SEAT PAN FRONT 18 -20" VELCRO	Fits 18W STD or 20W DROP
8,9	109628	SEAT PAN FRONT 19-21 VELCRO	Fits 19W STD or 21W DROP
8,9	108144	SEAT PAN FRONT 20 -22" VELCRO	Fits 20W STD or 22W DROP
8,9	109629	SEAT PAN FRONT 21-23 VELCRO	Fits 21W STD
8,9	108145	SEAT PAN FRONT 22 -24" VELCRO	Fits 22W STD
		REAR SEAT PANS W/ VELCRO Short (No Mounting Hardware)	
6,9	135130	SEAT PAN REAR 12-14 SHRT	
6,9	135131	SEAT PAN REAR 13-15 SHRT	
6,9	135132	SEAT PAN REAR 14-16 SHRT	
6,9	135133	SEAT PAN REAR 15-17 SHRT	
6,9	135134	SEAT PAN REAR 16-18 SHRT	
6,9	135135	SEAT PAN REAR 17-19 SHRT	
6,9	135136	SEAT PAN REAR 18-20 SHRT	
6,9	135137	SEAT PAN REAR 19-21 SHRT	
6,9	135138	SEAT PAN REAR 20-22 SHRT	
6,9	135139	SEAT PAN REAR 21-23 SHRT	
6,9	135140	SEAT PAN REAR 22-24 SHRT	
		SEAT PAN ASSEMBLIES (No Mounting Hardware)	
2,3,6-9	135141	SEAT PAN SHORT ASSM ONLY 12-14	Short, Fits 14W DROP
2,3,6-9	135142	SEAT PAN SHORT ASSM ONLY 13-15	Short, Fits 15W DROP
2,3,6-9	135143	SEAT PAN SHORT ASSM ONLY 14-16	Short, Fits 14W STD or 16W DROP
2,3,6-9	135144	SEAT PAN SHORT ASSM ONLY 15-17	Short, Fits 15W STD or 17W DROP
2,3,6-9	135145	SEAT PAN SHORT ASSM ONLY 16 -18	Short, Fits 16W STD or 18W DROP
2,3,6-9	135146	SEAT PAN SHORT ASSM ONLY 17-19	Short, Fits 17W STD or 19W DROP
2,3,6-9	135147	SEAT PAN SHORT ASSM ONLY 18-20	Short, Fits 18W STD or 20W DROP
2,3,6-9	135148	SEAT PAN SHORT ASSM ONLY 19-21	Short, Fits 19W STD or 21W DROP
2,3,6-9	135149	SEAT PAN SHORT ASSM ONLY 20-22	Short, Fits 20W STD or 22W DROP
2,3,6-9	135150	SEAT PAN SHORT ASSM ONLY 21-23	Short, Fits 21W STD
2,3,6-9	135151	SEAT PAN SHORT ASSM ONLY 22-24	Short, Fits 22W STD
		HARDWARE KITS	
12	108151	SEAT PAN HDWR KIT	
13	108157	REG SEAT PAN MOUNTING KIT (4)	
14	108158	DROP SEAT PAN MOUNTING KIT (4)	

Note:Mono Backrest is only compatible with a Jay J3 Backrest or any backrest from the Jay Custom Seating line.

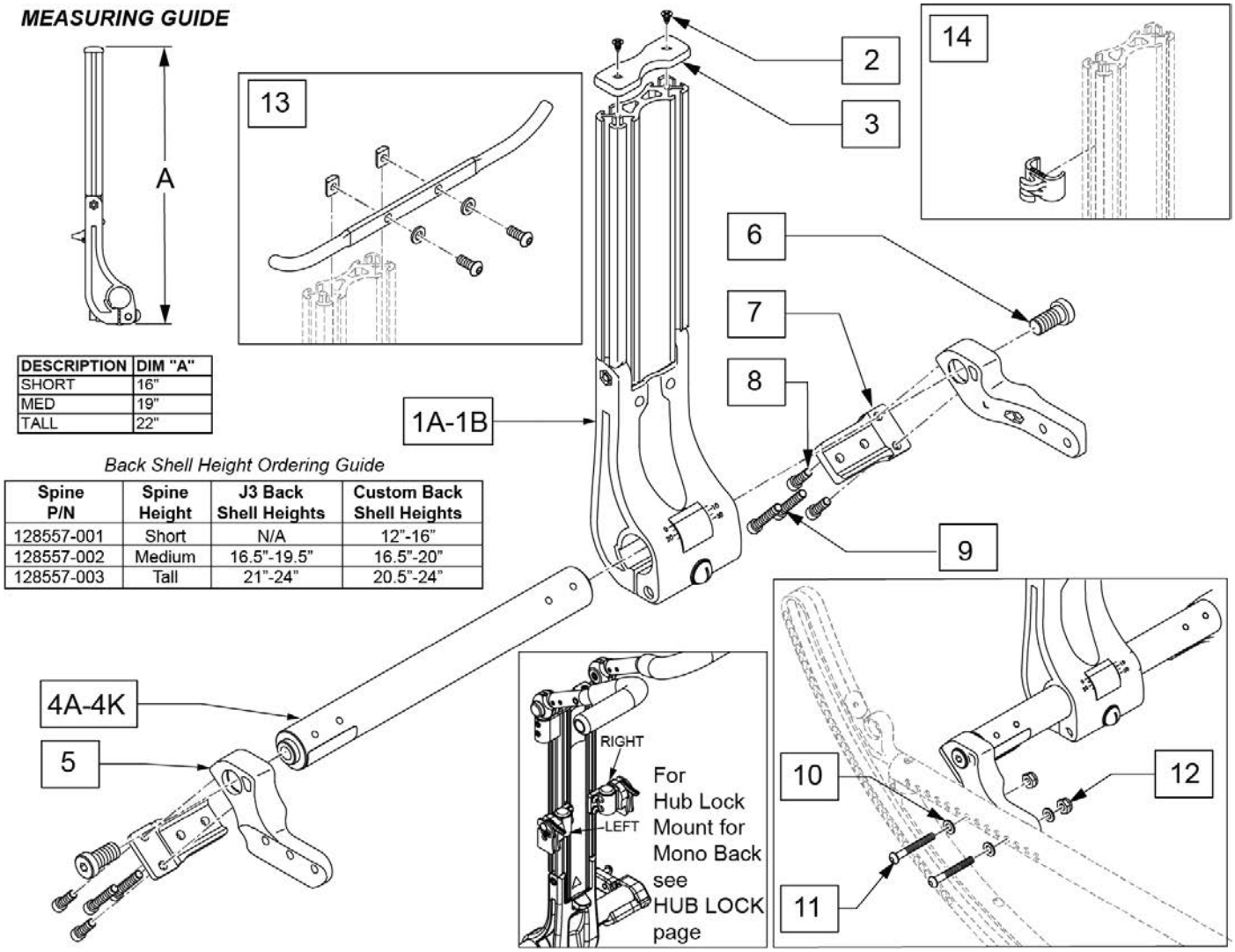

DESCRIPTION	DIM "A"
SHORT	16"
MED	19"
TALL	22"

Back Shell Height Ordering Guide

Spine P/N	Spine Height	J3 Back Shell Heights	Custom Back Shell Heights
128557-001	Short	N/A	12"-16"
128557-002	Medium	16.5"-19.5"	16.5"-20"
128557-003	Tall	21"-24"	20.5"-24"

Pos.	Item Number	Description	Remarks
1A,2,3	128557-001	SPINE ASSM MONO BACK SHORT	See Back Shell Height Ordering Guide to select appropriate Spine
1B,2,3	128557-002	SPINE ASSM MONO BACK MED	See Back Shell Height Ordering Guide to select appropriate Spine
1C,2,3	128557-003	SPINE ASSM MONO BACK TALL	See Back Shell Height Ordering Guide to select appropriate Spine
2,3	135152	MONO TOP CAP KIT	
2	128231	FH PHIL SCREW #8 X 3/8	
4A	128240-001	STRUT SPINE 12W	
4B	128240-002	STRUT SPINE 13W	
4C	128240-003	STRUT SPINE 14W	
4D	128240-004	STRUT SPINE 15W	
4E	128240-005	STRUT SPINE 16W	
4F	128240-006	STRUT SPINE ASSM 17W	
4G	128240-007	STRUT SPINE ASSM 18W	
4H	128240-008	STRUT SPINE ASSM 19W	
4I	128240-009	STRUT SPINE ASSM 20W	

Pos.	Item Number	Description	Remarks
4J	128240-010	STRUT SPINE ASSM 21W	
4K	128240-011	STRUT SPINE ASSM 22W	
5	127950	SEAT RAIL MOUNT RH	
5	127952	SEAT RAIL MOUNT LH	
6	105888	1/2-13 X 1 LOW SHCS W/PL	
7	127843	STRUT BRACKET FIXED	
8	128413	SHCS 1/4-20 X .75	
9	128347	SHCS 1/4-20 X 1.38 PL SHLDR	
10	106943	WASHER FLAT AN 1/4	
11	106962	BHCS 1/4-28 X 1-3/4	
12	106935	NUT NYLOCK THIN 1/4-28	
4A,5-12	135153	FIXED STRUT KIT 12W	
4B,5-12	135154	FIXED STRUT KIT 13W	
4C,5-12	135155	FIXED STRUT KIT 14W	
4D,5-12	135156	FIXED STRUT KIT 15W	
4E,5-12	135157	FIXED STRUT KIT 16W	
4F,5-12	135158	FIXED STRUT KIT 17W	
4G,5-12	135159	FIXED STRUT KIT 18W	
4H,5-12	135160	FIXED STRUT KIT 19W	
4I,5-12	135161	FIXED STRUT KIT 20W	
4J,5-12	135162	FIXED STRUT KIT 21W	
4K,5-12	135163	FIXED STRUT KIT 22W	
13	129377	HOOK ACCESSORY ASSM MONO BACK	
14	128192	CLIP CABLE SPINE	

Note: Mono Backrest is only compatible with a Jay J3 Backrest or any backrest from the Jay Custom Seating line.

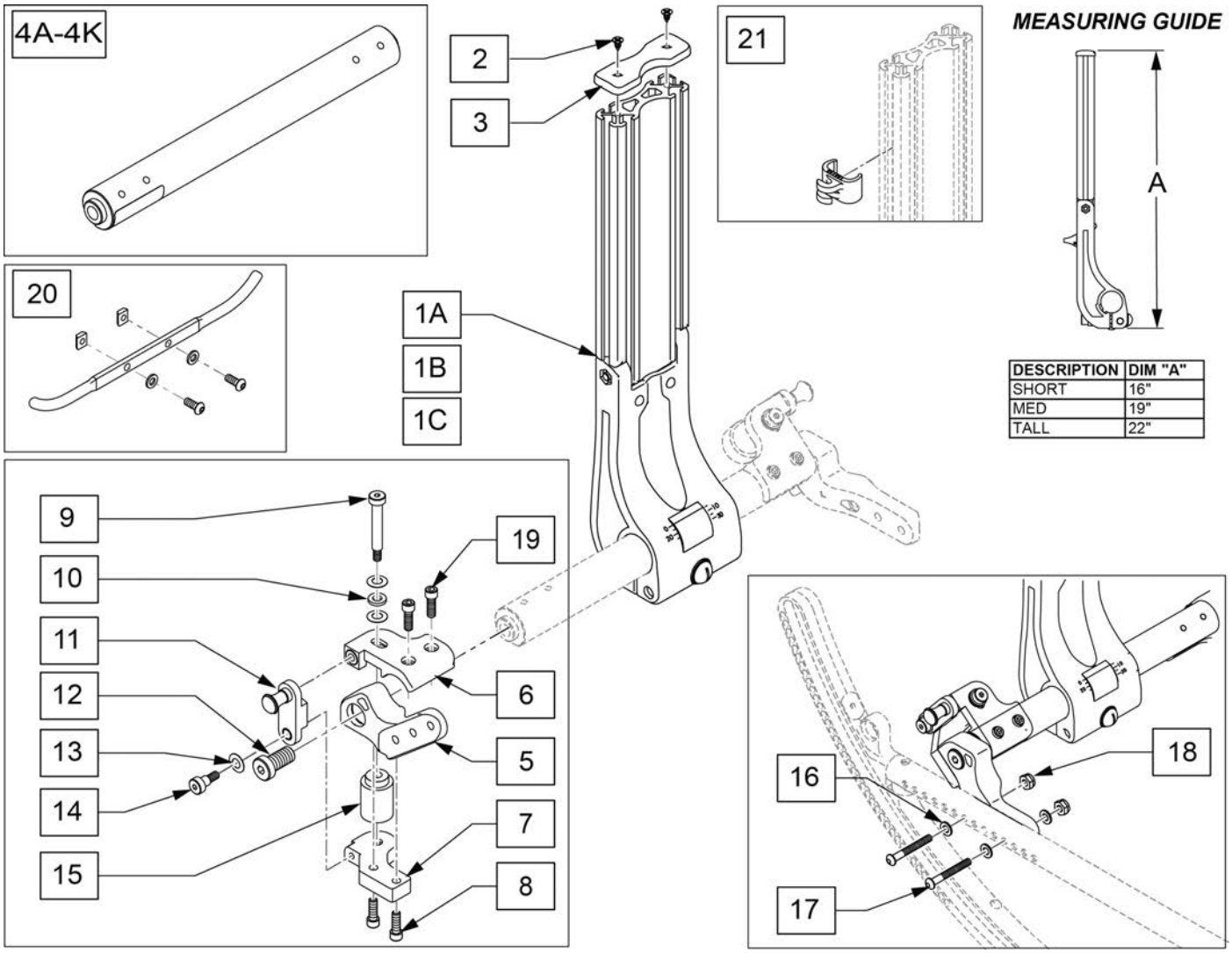

DESCRIPTION	DIM "A"
SHORT	16"
MED	19"
TALL	22"

Pos.	Item Number	Description	Remarks
1A,2,3	128557-001	SPINE ASSM MONO BACK SHORT	
1B,2,3	128557-002	SPINE ASSM MONO BACK MED	
1C,2,3	128557-003	SPINE ASSM MONO BACK TALL	
2,3	135152	MONO TOP CAP KIT	
2	128231	FH PHIL SCREW #8 X 3/8	
4A	132771	STRUT SPINE DYNAMIC 12W	
4B	132772	STRUT SPINE DYNAMIC 13W	
4C	132773	STRUT SPINE DYNAMIC 14W	
4D	132774	STRUT SPINE DYNAMIC 15W	
4E	132775	STRUT SPINE DYNAMIC 16W	
4F	132776	STRUT SPINE DYNAMIC 17W	
4G	132777	STRUT SPINE DYNAMIC 18W	
4H	132778	STRUT SPINE DYNAMIC 19W	
4I	132779	STRUT SPINE DYNAMIC 20W	

Pos.	Item Number	Description	Remarks
4J	132780	STRUT SPINE DYNAMIC 21W	
4K	132781	STRUT SPINE DYNAMIC 22W	
5	127950	SEAT RAIL MOUNT RH	
5	127952	SEAT RAIL MOUNT LH	
6	128049	BRKT ELASTOMER TOP LH	
6	128050	BRKT ELASTOMER TOP RH	
8	128413	SHCS 1/4-20 X .75	
9	011649-003	SHLDR SCREW M6 X 8MM OD X 45MM	
10	128352	WASHER EPDM RUBBER .56 OD .31 ID .09 THK	
11	128562	DYNAMIC LOCK BRKT ASSM RH	
11	128563	DYNAMIC LOCK BRKT ASSM LH	
12	011649-004	SHLDR SCREW M6 X 8MM OD X 8MM	
13	128351	DISC SPRING 16 X 8.2 X 0.4 MM	
14	105888	1/2-13 X 1 LOW SHCS W/PL	
15	119406	SOFT RED 65A DYNAMIC SUSPNSION	Soft
15	119407	MED BLUE 75A DYNAMIC SUSPNSION	Medium
15	119408	FIRM GRN 85A DYNAMIC SUSPNSION	shipped in bag with chair
15	119409	XFIRM BLK 93A DYNAMC SUSPNSION	installed standard on chair
16	106943	WASHER FLAT AN 1/4	
17	106962	BHCS 1/4-28 X 1-3/4	
18	106935	NUT NYLOCK THIN 1/4-28	
19	132820	SHCS 5/16-24 X 1.5	
20	129377	HOOK ACCESSORY ASSM MONO BACK	
21	128192	CLIP CABLE SPINE	
4A,5-19	135164	DYNAMIC STRUT KIT 12W	
4B,5-19	135165	DYNAMIC STRUT KIT 13W	
4C,5-19	135166	DYNAMIC STRUT KIT 14W	
4D,5-19	135167	DYNAMIC STRUT KIT 15W	
4E,5-19	135168	DYNAMIC STRUT KIT 16W	
4F,5-19	135182	DYNAMIC STRUT KIT 17W	
4G,5-19	135183	DYNAMIC STRUT KIT 18W	
4H,5-19	135184	DYNAMIC STRUT KIT 19W	
4I,5-19	135185	DYNAMIC STRUT KIT 20W	
4J,5-19	135186	DYNAMIC STRUT KIT 21W	
4K,5-19	135187	DYNAMIC STRUT KIT 22W	

MONO BACK MOUNT

[3/2014]

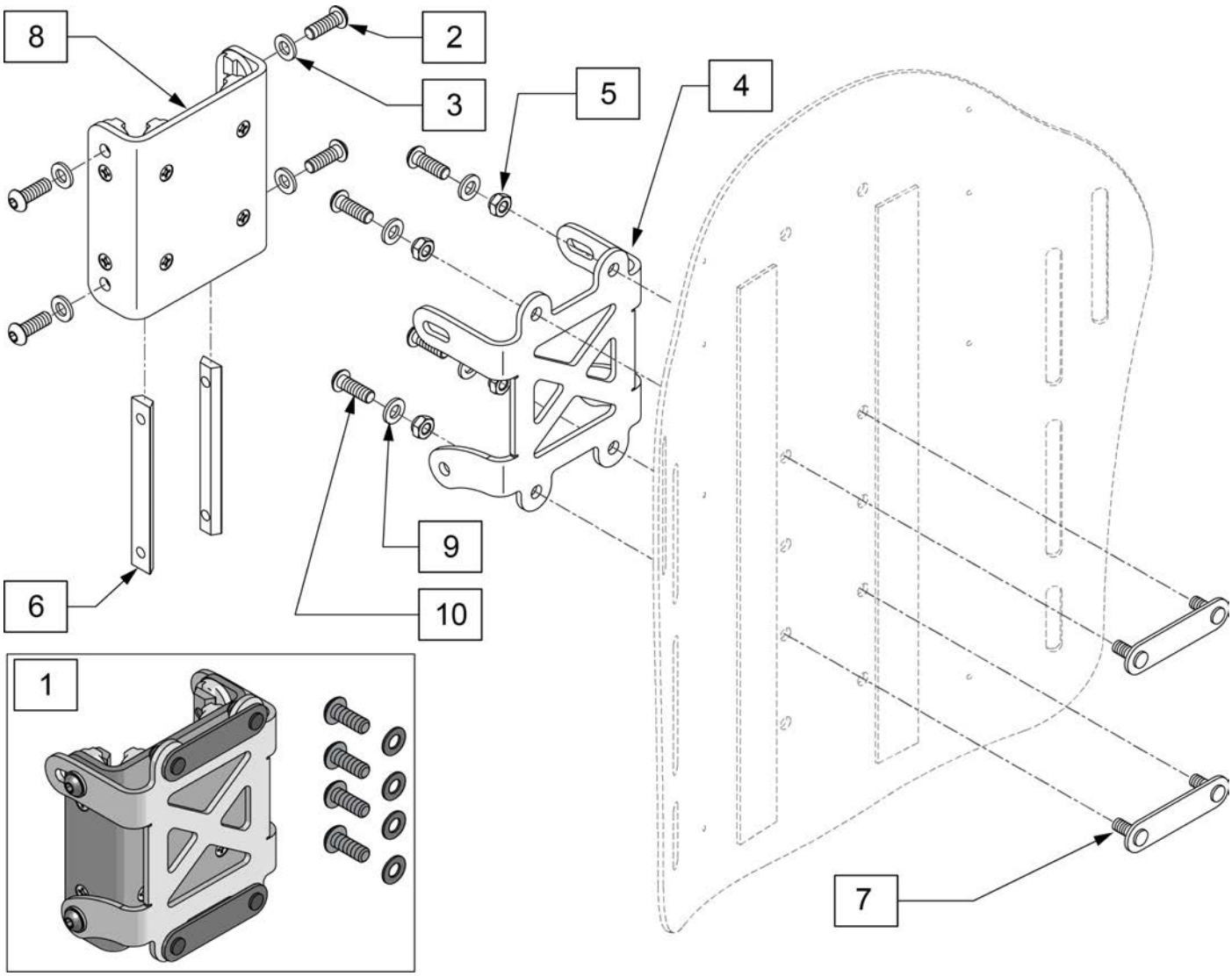

Pos.	Item Number	Description
1	135188	MONO BACK MOUNT ASSEM
2	107352	BHCS 1/4-28 X 3/4
3	106943	WASHER FLAT AN 1/4
4	128068	BRACKET BACK SHELL
5	210084	NUT HEX NYLOCK M6 BLACK
6	128232	CHANNEL NUT 2 HOLE 1/4-28
7	119995	NUT PLATE 51MM
8	128556	GLIDE ASSM MONO BACK
9	106943	WASHER FLAT AN 1/4
10	226078	BHCS 1/4-20 X 3/4

MONO JAY 3 BACK

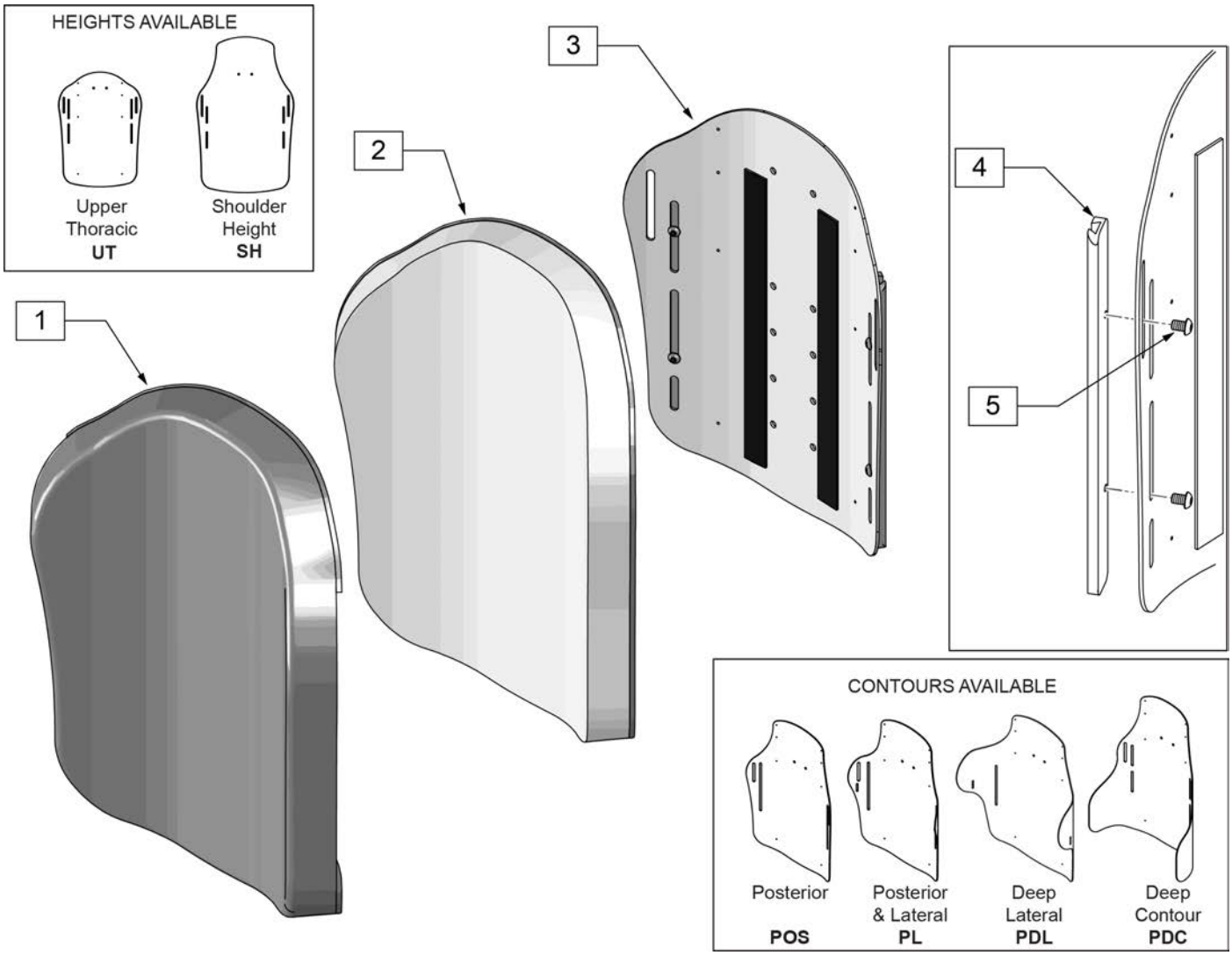

Pos.	Item Number	Description	Remarks
		COVER ONLY	
1	CJ3PAUTS12MO	J3 BK MONO POS UT 12W STD CVR	Cover only
1	CJ3PAUTS14MO	J3 BK MONO POS UT 14W STD CVR	Cover only
1	CJ3PAUTM14MO	J3 BK MONO POS UT 14W MED CVR	Cover only
1	CJ3PAUTT14MO	J3 BK MONO POS UT 14W TAL CVR	Cover only
1	CJ3PAUTS16MO	J3 BK MONO POS UT 16W STD CVR	Cover only
1	CJ3PAUTM16MO	J3 BK MONO POS UT 16W MED CVR	Cover only
1	CJ3PAUTT16MO	J3 BK MONO POS UT 16W TAL CVR	Cover only
1	CJ3PAUTS18MO	J3 BK MONO POS UT 18W STD CVR	Cover only
1	CJ3PAUTM18MO	J3 BK MONO POS UT 18W MED CVR	Cover only
1	CJ3PAUTT18MO	J3 BK MONO POS UT 18W TAL CVR	Cover only
1	CJ3PAUTS20MO	J3 BK MONO POS UT 20W STD CVR	Cover only
1	CJ3PAUTM20MO	J3 BK MONO POS UT 20W MED CVR	Cover only
1	CJ3PAUTT20MO	J3 BK MONO POS UT 20W TAL CVR	Cover only
1	CJ3PAUTM22MO	J3 BK MONO POS UT 22W MED CVR	Cover only
1	CJ3PLUTS12MO	J3 BK MONO PL UT 12W STD CVR	Cover only
1	CJ3PLUTS14MO	J3 BK MONO PL UT 14W STD CVR	Cover only
1	CJ3PLUTM14MO	J3 BK MONO PL UT 14W MED CVR	Cover only

Pos.	Item Number	Description	Remarks
1	CJ3PLUTT14MO	J3 BK MONO PL UT 14W TAL CVR	Cover only
1	CJ3PLUTS16MO	J3 BK MONO PL UT 16W STD CVR	Cover only
1	CJ3PLUTM16MO	J3 BK MONO PL UT 16W MED CVR	Cover only
1	CJ3PLUTT16MO	J3 BK MONO PL UT 16W TAL CVR	Cover only
1	CJ3PLUTS18MO	J3 BK MONO PL UT 18W STD CVR	Cover only
1	CJ3PLUTM18MO	J3 BK MONO PL UT 18W MED CVR	Cover only
1	CJ3PLUTT18MO	J3 BK MONO PL UT 18W TAL CVR	Cover only
1	CJ3PLUTS20MO	J3 BK MONO PL UT 20W STD CVR	Cover only
1	CJ3PLUTM20MO	J3 BK MONO PL UT 20W MED CVR	Cover only
1	CJ3PLUTT20MO	J3 BK MONO PL UT 20W TAL CVR	Cover only
1	CJ3PDLUTS14MO	J3 BK MONO PDL UT 14W STD CVR	Cover only
1	CJ3PDLUTM14MO	J3 BK MONO PDL UT 14W MED CVR	Cover only
1	CJ3PDLUTT14MO	J3 BK MONO PDL UT 14W TAL CVR	Cover only
1	CJ3PDLUTS16MO	J3 BK MONO PDL UT 16W STD CVR	Cover only
1	CJ3PDLUTM16MO	J3 BK MONO PDL UT 16W MED CVR	Cover only
1	CJ3PDLUTT16MO	J3 BK MONO PDL UT 16W TAL CVR	Cover only
1	CJ3PDLUTS18MO	J3 BK MONO PDL UT 18W STD CVR	Cover only
1	CJ3PDLUTM18MO	J3 BK MONO PDL UT 18W MED CVR	Cover only
1	CJ3PDLUTT18MO	J3 BK MONO PDL UT 18W TAL CVR	Cover only
1	CJ3PDLUTS20MO	J3 BK MONO PDL UT 20W STD CVR	Cover only
1	CJ3PDLUTM20MO	J3 BK MONO PDL UT 20W MED CVR	Cover only
1	CJ3PDLUTT20MO	J3 BK MONO PDL UT 20W TAL CVR	Cover only
1	CJ3PDCUTM14MO	J3 BK MONO PDC UT 14W MED CVR	Cover only
1	CJ3PDCUTM16MO	J3 BK MONO PDC UT 16W MED CVR	Cover only
1	CJ3PDCUTM18MO	J3 BK MONO PDC UT 18W MED CVR	Cover only
1	CJ3PDCUTM20MO	J3 BK MONO PDC UT 20W MED CVR	Cover only
1	CJ3PASHS14MO	J3 BK MONO POS SH 14W STD CVR	Cover only
1	CJ3PASHS16MO	J3 BK MONO POS SH 16W STD CVR	Cover only
1	CJ3PASHM16MO	J3 BK MONO POS SH 16W MED CVR	Cover only
1	CJ3PASHS18MO	J3 BK MONO POS SH 18W STD CVR	Cover only
1	CJ3PASHM18MO	J3 BK MONO POS SH 18W MED CVR	Cover only
1	CJ3PASHT18MO	J3 BK MONO POS SH 18W TAL CVR	Cover only
1	CJ3PASHS20MO	J3 BK MONO POS SH 20W STD CVR	Cover only
1	CJ3PASHM20MO	J3 BK MONO POS SH 20W MED CVR	Cover only
1	CJ3PASHT20MO	J3 BK MONO POS SH 20W TAL CVR	Cover only
1	CJ3PASHS22MO	J3 BK MONO POS SH 22W STD CVR	Cover only
1	CJ3PLSHS14MO	J3 BK MONO PL SH 14W STD CVR	Cover only
1	CJ3PLSHS16MO	J3 BK MONO PL SH 16W STD CVR	Cover only
1	CJ3PLSHM16MO	J3 BK MONO PL SH 16W MED CVR	Cover only
1	CJ3PLSHS18MO	J3 BK MONO PL SH 18W STD CVR	Cover only
1	CJ3PLSHM18MO	J3 BK MONO PL SH 18W MED CVR	Cover only
1	CJ3PLSTD18MO	J3 BK MONO PL SH 18W TAL CVR	Cover only
1	CJ3PLSHS20MO	J3 BK MONO PL SH 20W STD CVR	Cover only
1	CJ3PLSHM20MO	J3 BK MONO PL SH 20W MED CVR	Cover only
1	CJ3PLSHT20MO	J3 BK MONO PL SH 20W TAL CVR	Cover only
1	CJ3PDLSHS14MO	J3 BK MONO PDL SH 14W STD CVR	Cover only
1	CJ3PDLSHS16MO	J3 BK MONO PDL SH 16W STD CVR	Cover only
1	CJ3PDLSHM16MO	J3 BK MONO PDL SH 16W MED CVR	Cover only
1	CJ3PDLSHS18MO	J3 BK MONO PDL SH 18W STD CVR	Cover only
1	CJ3PDLSHM18MO	J3 BK MONO PDL SH 18W MED CVR	Cover only
1	CJ3PDLSHT18MO	J3 BK MONO PDL SH 18W TAL CVR	Cover only
1	CJ3PDLSHS20MO	J3 BK MONO PDL SH 20W STD CVR	Cover only
1	CJ3PDLSHM20MO	J3 BK MONO PDL SH 20W MED CVR	Cover only
1	CJ3PDLSHT20MO	J3 BK MONO PDL SH 20W TAL CVR	Cover only
1	CJ3PDCSHS16MO	J3 BK MONO PDC SH 16W STD CVR	Cover only
1	CJ3PDCSHS18MO	J3 BK MONO PDC SH 18W STD CVR	Cover only

Pos.	Item Number	Description	Remarks
1	CJ3PDCSHS20MO	J3 BK MONO PDC SH 20W STD CVR	Cover only
		FOAM	
2	BJ3PAUTS12	J3 FOAM POS UT 12W STD	
2	BJ3PAUTS14	J3 FOAM, POS UT 14W STD	
2	BJ3PAUTM14	J3 FOAM, POS UT 14W MED	
2	BJ3PAUTT14	J3 FOAM, POS UT 14W TALL	
2	BJ3PAUTS16	J3 FOAM, POS UT 16W STD	
2	BJ3PAUTM16	J3 FOAM, POS UT 16W MED	
2	BJ3PAUTT16	J3 FOAM, POS UT 16W TALL	
2	BJ3PAUTS18	J3 FOAM, POS UT 18W STD	
2	BJ3PAUTM18	J3 FOAM, POS UT 18W MED	
2	BJ3PAUTT18	J3 FOAM, POS UT 18W TALL	
2	BJ3PAUTS20	J3 FOAM, POS UT 20W STD	
2	BJ3PAUTM20	J3 FOAM, POS UT 20W MED	
2	BJ3PAUTT20	J3 FOAM, POS UT 20W TALL	
2	BJ3PAUTM22	J3HD FOAM POS UT 22W MED	
2	BJ3PLUTS12	J3 FOAM SHAL UT 12W STD	
2	BJ3PLUTS14	J3 FOAM, SHAL UT 14W STD	
2	BJ3PLUTM14	J3 FOAM, SHAL UT 14W MED	
2	BJ3PLUTT14	J3 FOAM, SHAL UT 14W TALL	
2	BJ3PLUTS16	J3 FOAM, SHAL UT 16W STD	
2	BJ3PLUTM16	J3 FOAM, SHAL UT 16W MED	
2	BJ3PLUTT16	J3 FOAM, SHAL UT 16W TALL	
2	BJ3PLUTS18	J3 FOAM, SHAL UT 18W STD	
2	BJ3PLUTM18	J3 FOAM, SHAL UT 18W MED	
2	BJ3PLUTT18	J3 FOAM, SHAL UT 18W TALL	
2	BJ3PLUTS20	J3 FOAM, SHAL UT 20W STD	
2	BJ3PLUTM20	J3 FOAM, SHAL UT 20W MED	
2	BJ3PLUTT20	J3 FOAM, SHAL UT 20W TALL	
2	BJ3PDLUTS14	J3 FOAM, DEEP UT 14W STD	
2	BJ3PDLUTM14	J3 FOAM, DEEP UT 14W MED	
2	BJ3PDLUTT14	J3 FOAM, DEEP UT 14W TALL	
2	BJ3PDLUTS16	J3 FOAM, DEEP UT 16W STD	
2	BJ3PDLUTM16	J3 FOAM, DEEP UT 16W MED	
2	BJ3PDLUTT16	J3 FOAM, DEEP UT 16W TALL	
2	BJ3PDLUTS18	J3 FOAM, DEEP UT 18W STD	
2	BJ3PDLUTM18	J3 FOAM, DEEP UT 18W MED	
2	BJ3PDLUTT18	J3 FOAM, DEEP UT 18W TALL	
2	BJ3PDLUTS20	J3 FOAM, DEEP UT 20W STD	
2	BJ3PDLUTM20	J3 FOAM, DEEP UT 20W MED	
2	BJ3PDLUTT20	J3 FOAM, DEEP UT 20W TALL	
2	BJ3PDCUTM14	J3 FOAM PDC UT 14W MED	
2	BJ3PDCUTM16	J3 FOAM PDC UT 16W MED	
2	BJ3PDCUTM18	J3 FOAM PDC UT 18W MED	
2	BJ3PDCUTM20	J3 FOAM PDC UT 20W MED	
2	BJ3PASHS14	J3 FOAM, POS SH 14W STD	
2	BJ3PASHS16	J3 FOAM, POS SH 16W STD	
2	BJ3PASHM16	J3 FOAM, POS SH 16W MED	
2	BJ3PASHS18	J3 FOAM, POS SH 18W STD	
2	BJ3PASHM18	J3 FOAM, POS SH 18W MED	
2	BJ3PASHT18	J3 FOAM, POS SH 18W TALL	
2	BJ3PASHS20	J3 FOAM, POS SH 20W STD	
2	BJ3PASHM20	J3 FOAM, POS SH 20W MED	
2	BJ3PASHT20	J3 FOAM, POS SH 20W TALL	
2	BJ3PASHS22	J3HD FOAM POS SH 22W STD	
2	BJ3PLSHS14	J3 FOAM, SHAL SH 14W STD	

Pos.	Item Number	Description	Remarks
2	BJ3PLSHS16	J3 FOAM, SHAL SH 16W STD	
2	BJ3PLSHM16	J3 FOAM, SHAL SH 16W MED	
2	BJ3PLSHS18	J3 FOAM, SHAL SH 18W STD	
2	BJ3PLSHM18	J3 FOAM, SHAL SH 18W MED	
2	BJ3PLSHT18	J3 FOAM, SHAL SH 18W TALL	
2	BJ3PLSHS20	J3 FOAM, SHAL SH 20W STD	
2	BJ3PLSHM20	J3 FOAM, SHAL SH 20W MED	
2	BJ3PLSHT20	J3 FOAM, SHAL SH 20W TALL	
2	BJ3PDLSHS14	J3 FOAM, DEEP SH 14W STD	
2	BJ3PDLSHS16	J3 FOAM, DEEP SH 16W STD	
2	BJ3PDLSHM16	J3 FOAM, DEEP SH 16W MED	
2	BJ3PDLSHS18	J3 FOAM, DEEP SH 18W STD	
2	BJ3PDLSHM18	J3 FOAM, DEEP SH 18W MED	
2	BJ3PDLSHT18	J3 FOAM, DEEP SH 18W TALL	
2	BJ3PDLSHS20	J3 FOAM, DEEP SH 20W STD	
2	BJ3PDLSHM20	J3 FOAM, DEEP SH 20W MED	
2	BJ3PDLSHT20	J3 FOAM, DEEP SH 20W TALL	
2	BJ3PDCSHS16	J3 FOAM PDC SH 16W STD	
2	BJ3PDCSHS18	J3 FOAM PDC SH 18W STD	
2	BJ3PDCSHS20	J3 FOAM PDC SH 20W STD	
		SHELL WITH TRACKS	
3-5	SJ3PAUTS12MO	J3 BK MONO POS UT 12W STD	
3-5	SJ3PAUTS14MO	J3 BK MONO POS UT 14W STD	
3-5	SJ3PAUTM14MO	J3 BK MONO POS UT 14W MED	
3-5	SJ3PAUTT14MO	J3 BK MONO POS UT 14W TAL	
3-5	SJ3PAUTS16MO	J3 BK MONO POS UT 16W STD	
3-5	SJ3PAUTM16MO	J3 BK MONO POS UT 16W MED	
3-5	SJ3PAUTT16MO	J3 BK MONO POS UT 16W TAL	
3-5	SJ3PAUTS18MO	J3 BK MONO POS UT 18W STD	
3-5	SJ3PAUTM18MO	J3 BK MONO POS UT 18W MED	
3-5	SJ3PAUTT18MO	J3 BK MONO POS UT 18W TAL	
3-5	SJ3PAUTS20MO	J3 BK MONO POS UT 20W STD	
3-5	SJ3PAUTM20MO	J3 BK MONO POS UT 20W MED	
3-5	SJ3PAUTT20MO	J3 BK MONO POS UT 20W TAL	
3-5	SJ3PAUTM22MO	J3 BK MONO POS UT 22W MED	
3-5	SJ3PLUTS12MO	J3 BK MONO PL UT 12W STD	
3-5	SJ3PLUTS14MO	J3 BK MONO PL UT 14W STD	
3-5	SJ3PLUTM14MO	J3 BK MONO PL UT 14W MED	
3-5	SJ3PLUTT14MO	J3 BK MONO PL UT 14W TAL	
3-5	SJ3PLUTS16MO	J3 BK MONO PL UT 16W STD	
3-5	SJ3PLUTM16MO	J3 BK MONO PL UT 16W MED	
3-5	SJ3PLUTT16MO	J3 BK MONO PL UT 16W TAL	
3-5	SJ3PLUTS18MO	J3 BK MONO PL UT 18W STD	
3-5	SJ3PLUTM18MO	J3 BK MONO PL UT 18W MED	
3-5	SJ3PLUTT18MO	J3 BK MONO PL UT 18W TAL	
3-5	SJ3PLUTS20MO	J3 BK MONO PL UT 20W STD	
3-5	SJ3PLUTM20MO	J3 BK MONO PL UT 20W MED	
3-5	SJ3PLUTT20MO	J3 BK MONO PL UT 20W TAL	
3-5	SJ3PDLUTS14MO	J3 BK MONO PDL UT 14W STD	
3-5	SJ3PDLUTM14MO	J3 BK MONO PDL UT 14W MED	
3-5	SJ3PDLUTT14MO	J3 BK MONO PDL UT 14W TAL	
3-5	SJ3PDLUTS16MO	J3 BK MONO PDL UT 16W STD	
3-5	SJ3PDLUTM16MO	J3 BK MONO PDL UT 16W MED	
3-5	SJ3PDLUTT16MO	J3 BK MONO PDL UT 16W TAL	
3-5	SJ3PDLUTS18MO	J3 BK MONO PDL UT 18W STD	
3-5	SJ3PDLUTM18MO	J3 BK MONO PDL UT 18W MED	

Pos.	Item Number	Description	Remarks
3-5	SJ3PDLUTT18MO	J3 BK MONO PDL UT 18W TAL	
3-5	SJ3PDLUTS20MO	J3 BK MONO PDL UT 20W STD	
3-5	SJ3PDLUTM20MO	J3 BK MONO PDL UT 20W MED	
3-5	SJ3PDLUTT20MO	J3 BK MONO PDL UT 20W TAL	
3-5	SJ3PDCUTM14MO	J3 BK MONO PDC UT 14W MED	
3-5	SJ3PDCUTM16MO	J3 BK MONO PDC UT 16W MED	
3-5	SJ3PDCUTM18MO	J3 BK MONO PDC UT 18W MED	
3-5	SJ3PDCUTM20MO	J3 BK MONO PDC UT 20W MED	
3-5	SJ3PASHS14MO	J3 BK MONO POS SH 14W STD	
3-5	SJ3PASHS16MO	J3 BK MONO POS SH 16W STD	
3-5	SJ3PASHM16MO	J3 BK MONO POS SH 16W MED	
3-5	SJ3PASHS18MO	J3 BK MONO POS SH 18W STD	
3-5	SJ3PASHM18MO	J3 BK MONO POS SH 18W MED	
3-5	SJ3PASHT18MO	J3 BK MONO POS SH 18W TAL	
3-5	SJ3PASHS20MO	J3 BK MONO POS SH 20W STD	
3-5	SJ3PASHM20MO	J3 BK MONO POS SH 20W MED	
3-5	SJ3PASHT20MO	J3 BK MONO POS SH 20W TAL	
3-5	SJ3PASHS22MO	J3 BK MONO POS SH 22W STD	
3-5	SJ3PLSHS14MO	J3 BK MONO PL SH 14W STD	
3-5	SJ3PLSHS16MO	J3 BK MONO PL SH 16W STD	
3-5	SJ3PLSHM16MO	J3 BK MONO PL SH 16W MED	
3-5	SJ3PLSHS18MO	J3 BK MONO PL SH 18W STD	
3-5	SJ3PLSHM18MO	J3 BK MONO PL SH 18W MED	
3-5	SJ3PLSHT18MO	J3 BK MONO PL SH 18W TAL	
3-5	SJ3PLSHS20MO	J3 BK MONO PL SH 20W STD	
3-5	SJ3PLSHM20MO	J3 BK MONO PL SH 20W MED	
3-5	SJ3PLSHT20MO	J3 BK MONO PL SH 20W TAL	
3-5	SJ3PDLSHS14MO	J3 BK MONO PDL SH 14W STD	
3-5	SJ3PDLSHS16MO	J3 BK MONO PDL SH 16W STD	
3-5	SJ3PDLSHM16MO	J3 BK MONO PDL SH 16W MED	
3-5	SJ3PDLSHS18MO	J3 BK MONO PDL SH 18W STD	
3-5	SJ3PDLSHM18MO	J3 BK MONO PDL SH 18W MED	
3-5	SJ3PDLSHT18MO	J3 BK MONO PDL SH 18W TAL	
3-5	SJ3PDLSHS20MO	J3 BK MONO PDL SH 20W STD	
3-5	SJ3PDLSHM20MO	J3 BK MONO PDL SH 20W MED	
3-5	SJ3PDLSHT20MO	J3 BK MONO PDL SH 20W TAL	
3-5	SJ3PDCSHS16MO	J3 BK MONO PDC SH 16W STD	
3-5	SJ3PDCSHS18MO	J3 BK MONO PDC SH 18W STD	
3-5	SJ3PDCSHS20MO	J3 BK MONO PDC SH 20W STD	
4	128354-002	TRACK LATERALS	
4	128354-001	CHANNEL LATERALS SHORT	used with 22 in wide only
5	226060	BHCS 1/4-20 X 3/8	

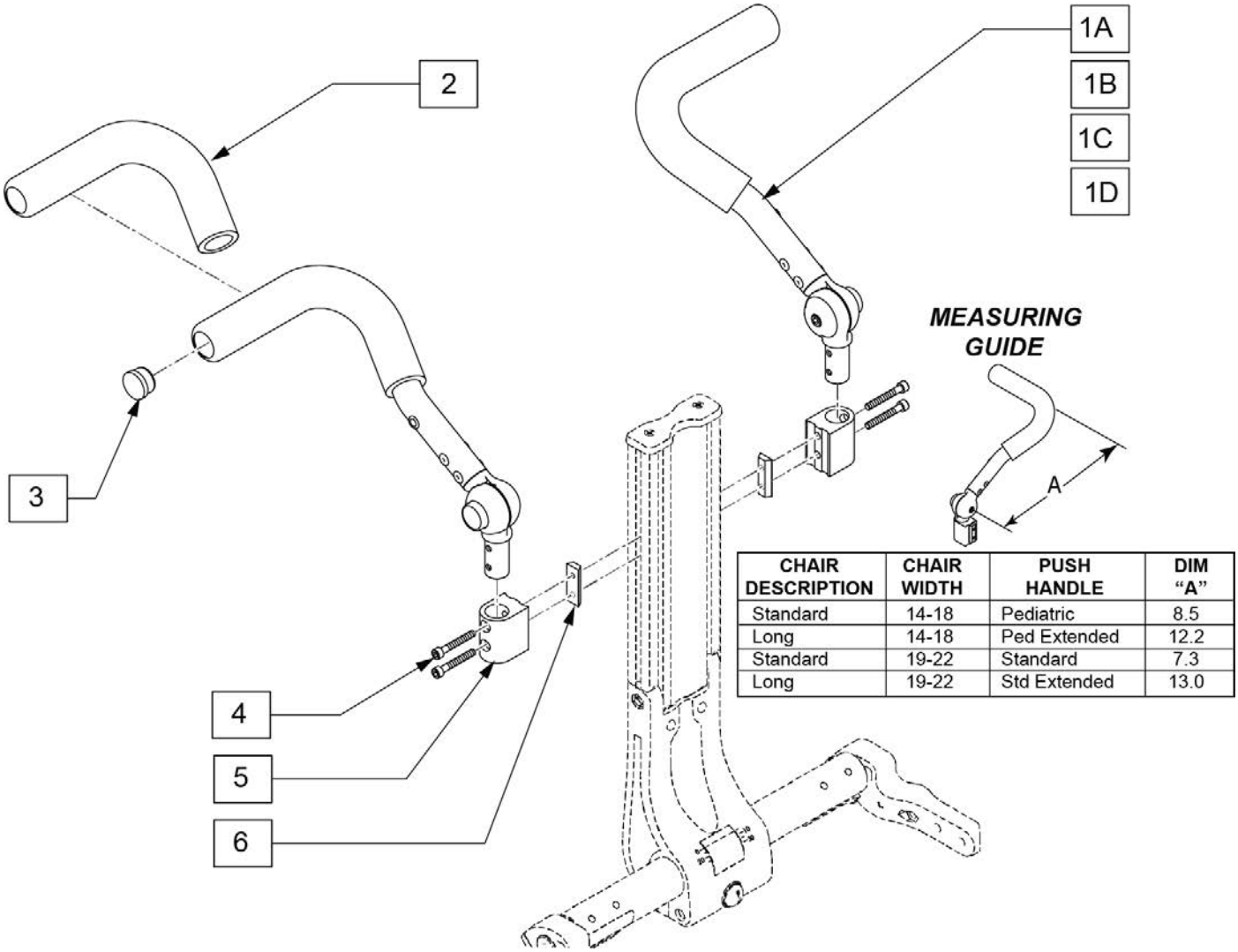

CHAIR DESCRIPTION	CHAIR WIDTH	PUSH HANDLE	DIM "A"
Standard	14-18	Pediatric	8.5
Long	14-18	Ped Extended	12.2
Standard	19-22	Standard	7.3
Long	19-22	Std Extended	13.0

Pos.	Item Number	Description	Remarks
1A-6	128565	PUSH HNDL ASSM MONO PED STD RH	
1A-6	128567	PUSH HNDL ASSM MONO PED STD LH	
1B-6	128566	PUSH HNDL ASSM MONO PED EXT RH	
1B-6	128568	PUSH HNDL ASSM MONO PED EXT LH	
1C-6	128569	PUSH HNDL ASSM MONO STD RH	
1C-6	128571	PUSH HNDL ASSM MONO STD LH	
1D-6	128570	PUSH HNDL ASSM MONO EXT RH	
1D-6	128572	PUSH HNDL ASSM MONO EXT LH	
2	560638	FOAM GRIP .840 ID SHORT	replacement foam
3	561007	7/8" INSERT PLUG .083	
4	128238	SHCS 10-24 X 1-3/8 PL SHLDR	
5	128073	PUSH HANDLE RECIEVER	
6	128233	10-24 CHANNEL NUT 2 HOLE	

CANTILEVER ARMREST- MONO BACK

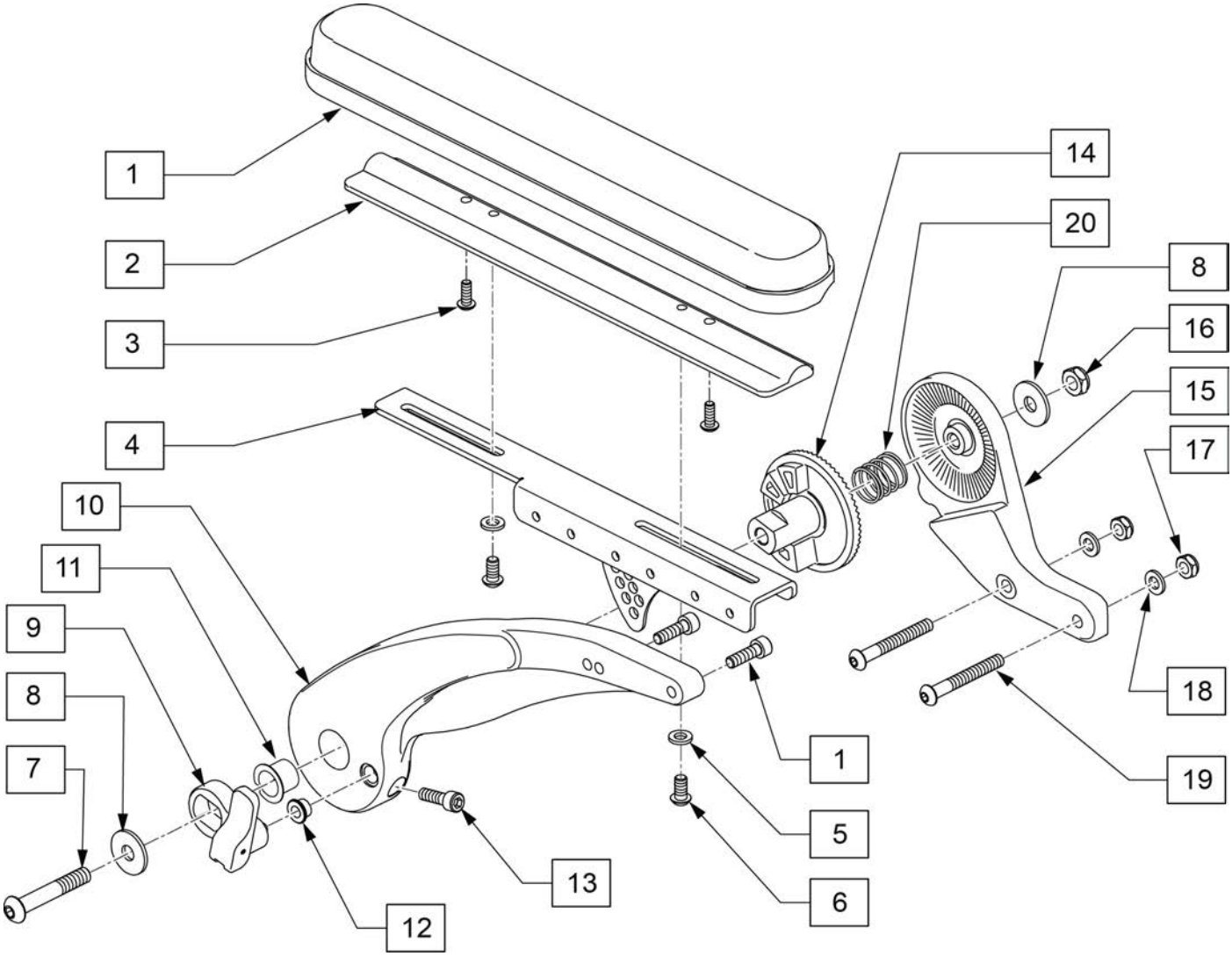

Pos.	Item Number	Description	Remarks
1-3,5,6	135189	CANTI ARMPAD KIT FULL	
3	226043	10-32 X 1/2 BH C/S BLK	
5	250104	WASHER FLAT M6	
6	230113	BHCS M6 X 1 X 12	
7	013152	BHCS M8 X 55	
8	015056	WASHER M10 X 35 X 1.5 BLK	
9	135190	FLIP UP ASSM	
11	104469	MARCINAL LUB BRNG SF-1 2020	
12	481339	BACK REL BUSHING RIGID BLK ZN	
13	013156	SHCS M6 X 1 X 20 BLK W/PL	
16	013036	M8 X 1.25 JAM NUT HEX	
17	106935	NUT NYLOCK THIN 1/4-28	
18	106943	WASHER FLAT AN 1/4	
19	106965	BHCS 1/4-28 X 2 SHLDR	
1-20	129375	CANTILEVER ARMREST ASSM RT	Right
1-20	129376	CANTILEVER ARMREST ASSM LH	Left
1,4,10-13	129115	CANTILEVER ARMREST W/LOCK RH	Right
1,4,10-13	129116	CANTILEVER ARMREST W/LOCK LH	Left

Note: Cantilever Armrest is only compatible with chairs equipped with Mono Backrest.

MONO VENT TRAY LTV

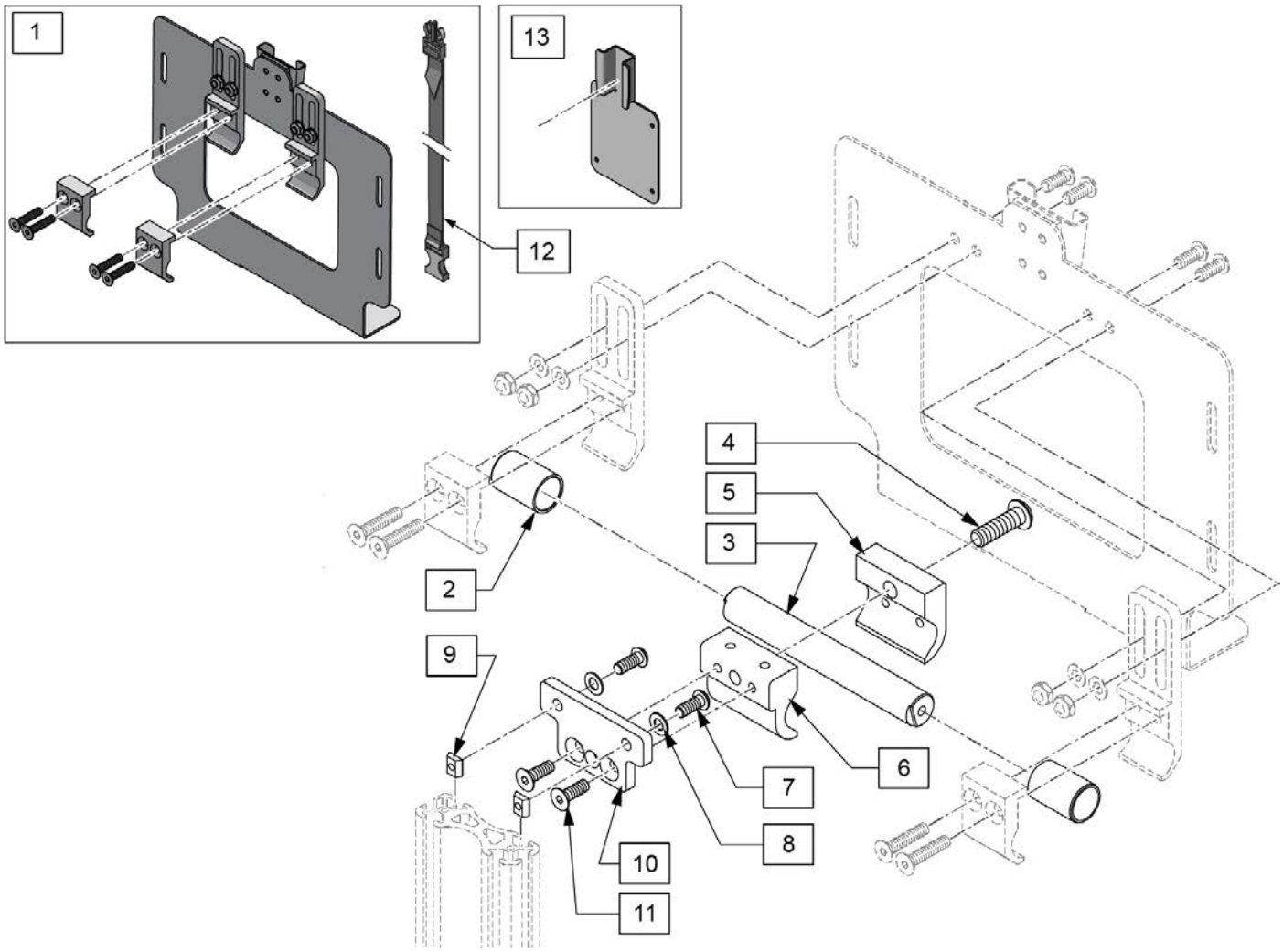

Pos.	Item Number	Description
1,12	129611	LTV MOUNT KIT
2	126744	BUSHING VENT TILT
3	126962	STRUT VENT TILT 10W
7	106959	BHCS 1/4-28 X 5/8
8	106944	WASHER FLAT THIN AN 1/4
9	481106-QU	1/4-28 CHANNEL NUT
4-6,10,11	129065	CLAMP ASSM MONO VENT
12	125584	STRAP ASSEMBLY KIT
1-12	129374	VENT MOUNT ASSM MONO BACKREST
13	127211	TRILOGY MOUNT ADAPTER

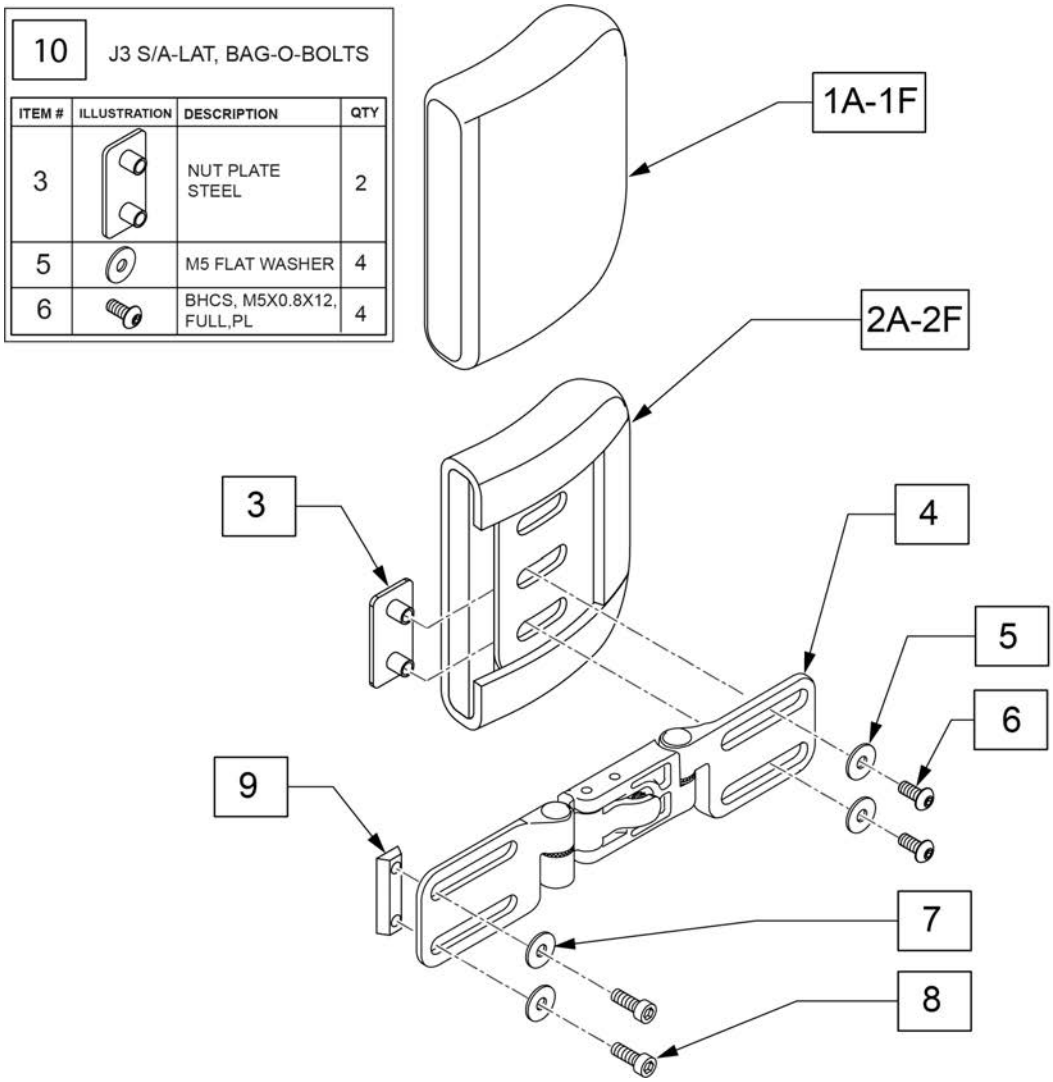

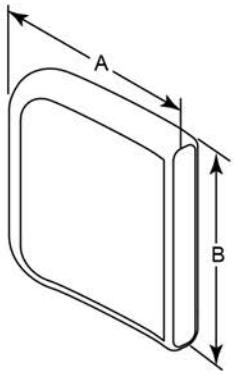

MEASURING GUIDE

DESCRIPTION	DIM A	DIM B
Lateral Cover 4x4	4"	4"
Lateral Cover 4x5	4"	5"
Lateral Cover 4x6	4"	6"
Lateral Cover 6x4	6"	4"
Lateral Cover 6x5	6"	5"
Lateral Cover 6x6	6"	6"
Lateral Base 4x4	4"	4"
Lateral Base 4x5	4"	5"
Lateral Base 4x6	4"	6"
Lateral Base 6x4	6"	4"
Lateral Base 6x5	6"	5"
Lateral Base 6x6	6"	6"

Pos.	Item Number	Description	Remarks
1A	CJ3LAT4x4P	LATERAL COVER 4x4	
1B	CJ3LAT4x5P	LATERAL COVER 4x5	
1C	CJ3LAT4x6P	LATERAL COVER 4x6	
1D	CJ3LAT6x4P	LATERAL COVER 6x4	
1E	CJ3LAT6x5P	LATERAL COVER 6x5	
1F	CJ3LAT6x6P	LATERAL COVER 6x6	
1A,2A	BJ3LAT4x4P	LATERAL BASE 4x4	Includes cover
1B,2B	BJ3LAT4x5P	LATERAL BASE 4x5	Includes cover
1C,2C	BJ3LAT4x6P	LATERAL BASE 4x6	Includes cover
1D,2D	BJ3LAT6x4P	LATERAL BASE 6x4	Includes cover
1E,2E	BJ3LAT6x5P	LATERAL BASE 6x5	Includes cover
1F,2F	BJ3LAT6x6P	LATERAL BASE 6x6	Includes cover
3-6	256184	JAY SA LAT AND HDW RIGHT	
3-6	256185	JAY SA LAT AND HDW LEFT	
7	MF014652	WASHER 1/4"- 3/4"OD BLK	
8	221090	1/4-28 X 3/8 BH C/S BLK	
9	481108-QU	(04) 1/4-28 CHANNEL NUT-2 HOLE	
10	J3LATSAP	J3 S/A-LAT. BAG-O-BOLTS	

Pos.	Item Number	Description	Remarks
1A,2A,3-9	JLATSA44ML	JAY SA LAT 4X4 MONO LH	
1A,2A,3-9	JLATSA44MR	JAY SA LAT 4X4 MONO RH	
1B,2B,3-9	JLATSA45ML	JAY SA LAT 4X5 MONO LH	
1B,2B,3-9	JLATSA45MR	JAY SA LAT 4X5 MONO RH	
1C,2C,3-9	JLATSA46ML	JAY SA LAT 4X6 MONO LH	
1C,2C,3-9	JLATSA46MR	JAY SA LAT 4X6 MONO RH	
1D,2D,3-9	JLATSA64ML	JAY SA LAT 6X4 MONO LH	
1D,2D,3-9	JLATSA64MR	JAY SA LAT 6X4 MONO RH	
1E,2E,3-9	JLATSA65ML	JAY SA LAT 6X5 MONO LH	
1E,2E,3-9	JLATSA65MR	JAY SA LAT 6X5 MONO LH	
1F,2F,3-9	JLATSA66ML	JAY SA LAT 6X6 MONO LH	
1F,2F,3-9	JLATSA66MR	JAY SA LAT 6X6 MONO RH	

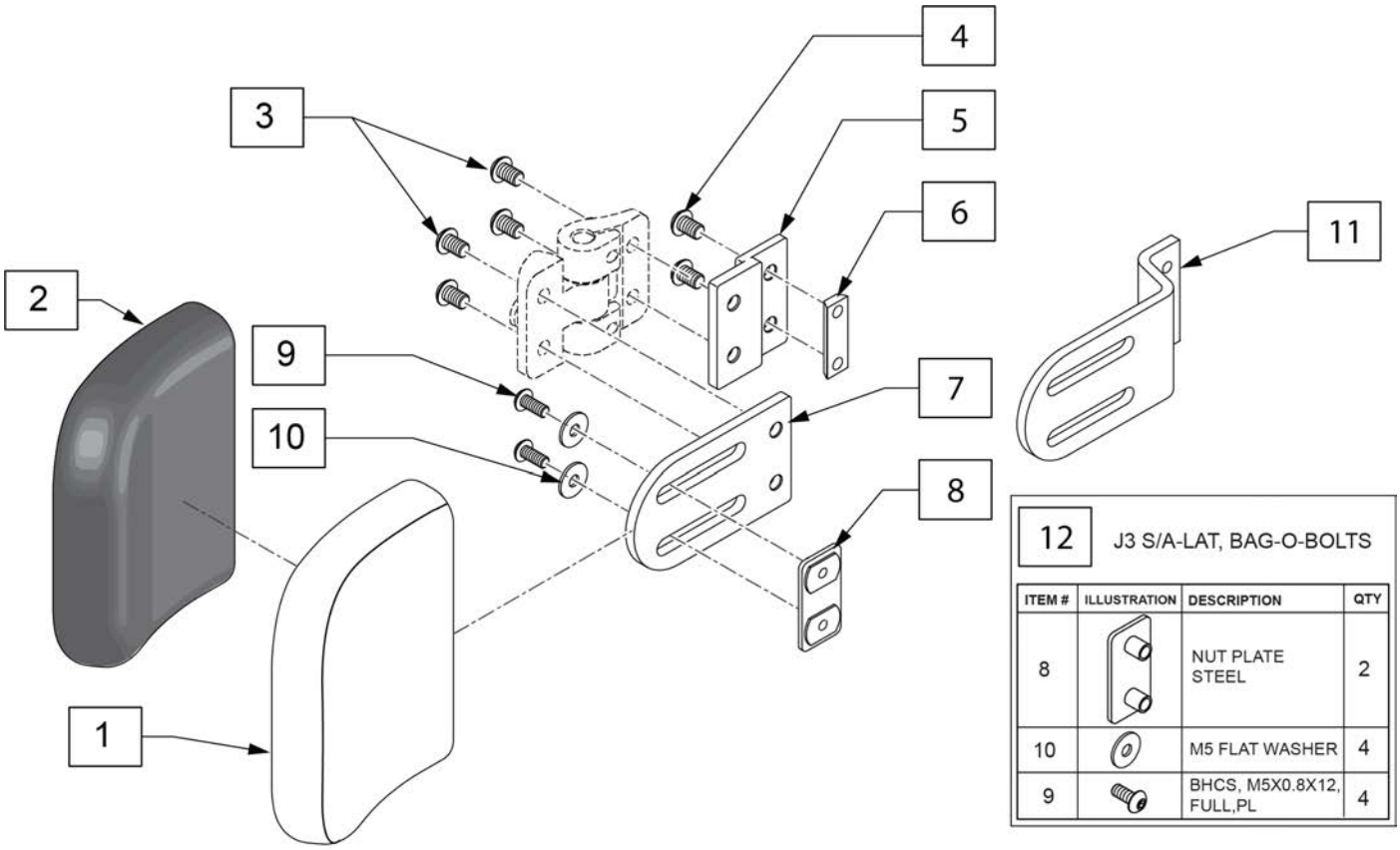

Pos.	Item Number	Description	Remarks
1,2	BJ3LAT4x4P	LATERAL BASE 4x4	Includes cover
1,2	BJ3LAT4x5P	LATERAL BASE 4x5	Includes cover
1,2	BJ3LAT4x6P	LATERAL BASE 4x6	Includes cover
1,2	BJ3LAT6x4P	LATERAL BASE 6x4	Includes cover
1,2	BJ3LAT6x5P	LATERAL BASE 6x5	Includes cover
1,2	BJ3LAT6x6P	LATERAL BASE 6x6	Includes cover
2	CJ3LAT4x4P	LATERAL COVER 4x4	
2	CJ3LAT4x5P	LATERAL COVER 4x5	
2	CJ3LAT4x6P	LATERAL COVER 4x6	
2	CJ3LAT6x4P	LATERAL COVER 6x4	
2	CJ3LAT6x5P	LATERAL COVER 6x5	
2	CJ3LAT6x6P	LATERAL COVER 6x6	
3	226060	1/4-20 X 3/8 BH C/S W/PATCH	
4	221090	1/4-28 X 3/8 BH C/S BLK	
5	HDW2521	1IN HEIGHT ADAPTER PLATE	
6	481108-QU	(04) 1/4-28 CHANNEL NUT-2 HOLE	
7	PRT2625	PAD MNTG PLATE FLUSH STD	
11	PRT2630	1" OFF/ONE PC PAD MNT STD	For 1" offset
12	J3LATSAP	J3 S/A-LAT. BAG-O-BOLTS	

AXYS HEADREST

Note: if using the Headrest Post on a Quickie Power Chair, please refer to the HEADREST CLAMPS page located in the appropriate power chair parts manual.

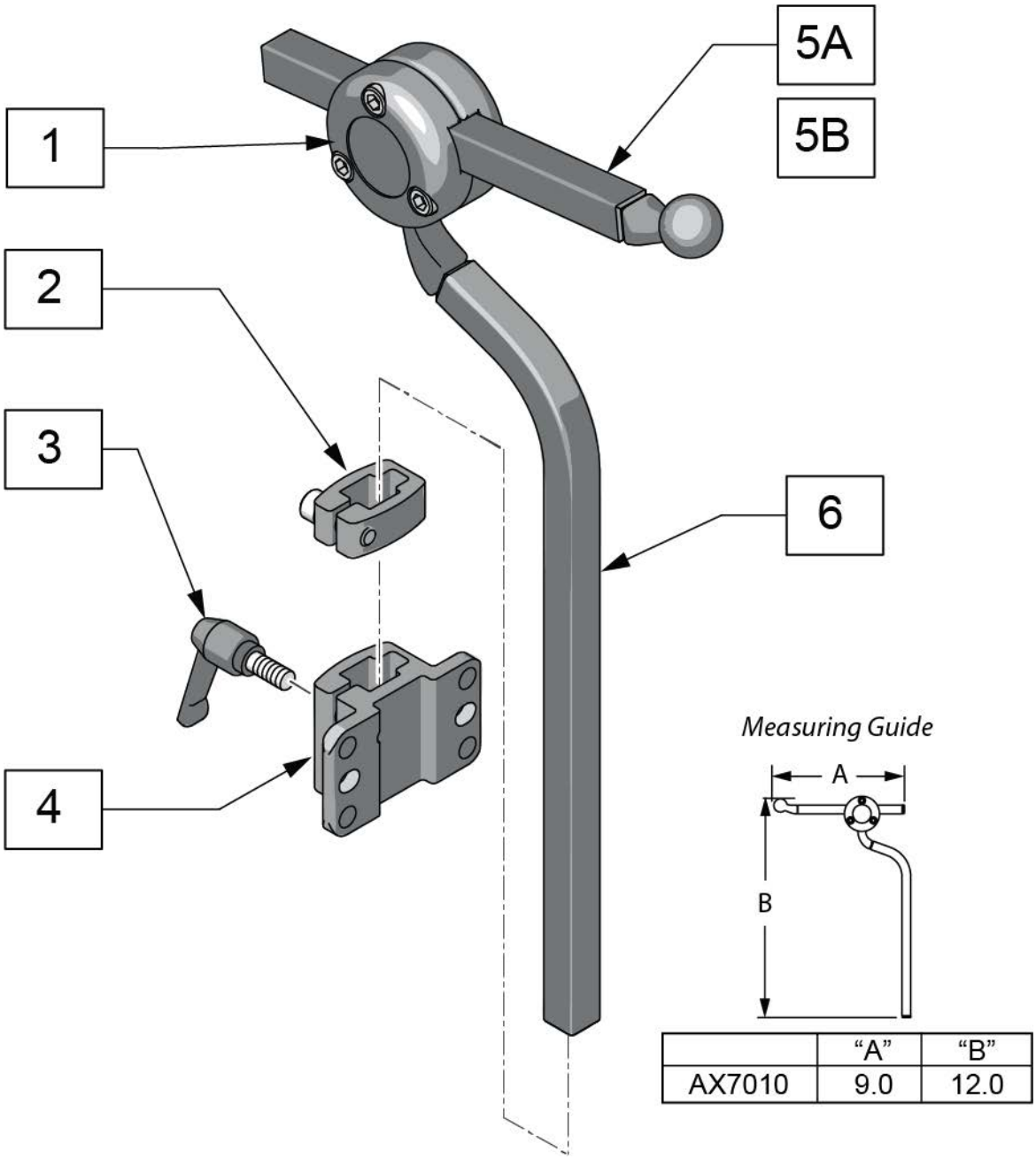

Pos.	Item Number	Description
5A	AX5080	BALLROD AXYS 6" SQUARE BLACK
5B	AX6055	AXYS 12" SQ HORIZ BAR BLK
6	MW070300	AXYS VERT ROD BLK
3,4	115215	J3 BK STD HD RST BRKT KIT
2-4	M2500	AXYS DETACH BRKT
1,5A,6	AX7010	AXYS CORE MOUNT HDWR

Note: if using the Headrest Post on a Quickie Power Chair, please refer to the HEADREST CLAMPS page located in the appropriate power chair parts manual.

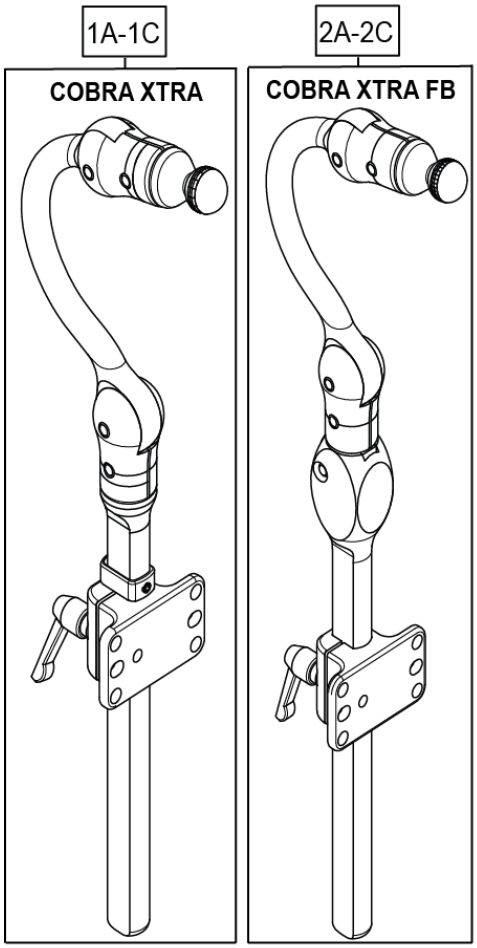

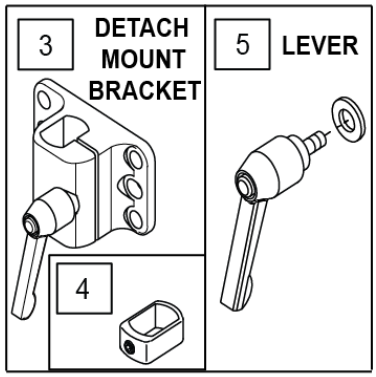

Measuring Guide

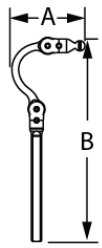

SIZE	P/N	"A"	"B"
ADULT	CBRA7010	5.0	15.0
	CBRA5010	5.0	15.0
PEDIATRIC	CBRA7030	4.5	11.0
	CBRA5030	4.5	11.0
EARLY INTERVENTION	CBRA7080	4.0	10.0
	CBRA5080	4.0	10.0

6 HARDWARE MOUNT KIT

ILLUSTRATION	DESCRIPTION	QTY
	WASHER 1/4" SAE BLK	2
	BOLT 1/4-20 X 3/4" SHCS BLK NI	2
	1/4-20 NYLOK	2
	1/4-20 X 3/8" T-NUT THF	2

7 HARDWARE MOUNT KIT (SLIDE & SWINGAWAY)

ILLUSTRATION	DESCRIPTION	QTY
	WASHER 1/4" SAE BLK	4
	BOLT 1/4-20 X 1/2" SHCS BLK	2
	BOLT 1/4-20X1-1/4" SHCS BLK NI	4
	1/4-20 NYLOK	4
	1/4-20 X 3/8" T-NUT THF	4

Pos.	Item Number	Description	Remarks
1A	CBRA7010	COBRA XTRA MOUNT HDW, ADUL	
1B	CBRA7030	COBRA XTRA MOUNT HDW, PED	
1C	CBRA7080	COBRA XTRA MOUNT HDW, EI	
2A	CBRA5030	COBRA XTRA FB MOUNT HDW, PED	
2B	CBRA5010	COBRA XTRA FB MOUNT HDW, ADUL	
2C	CBRA5080	COBRA XTRA FB MOUNT HDW, EI	
3	M2400-WB	COBRA XTRA DETACH BRKT	INCLUDES QTY 2 1/4-20 X 1/2" SHCS & WASHERS
4	MW070152	COBRA VERT STOP BLK	
5	M0030	KNOB PLAS ADJ LVR 1/4-20 X20mm	
6	M0055	FASTENER PACK DETACH	
7	M0075	FASTENER PACK SWINGAWAY MOUNT	

ONYX HEADREST

Note: Please order Mounting Bracket separately.

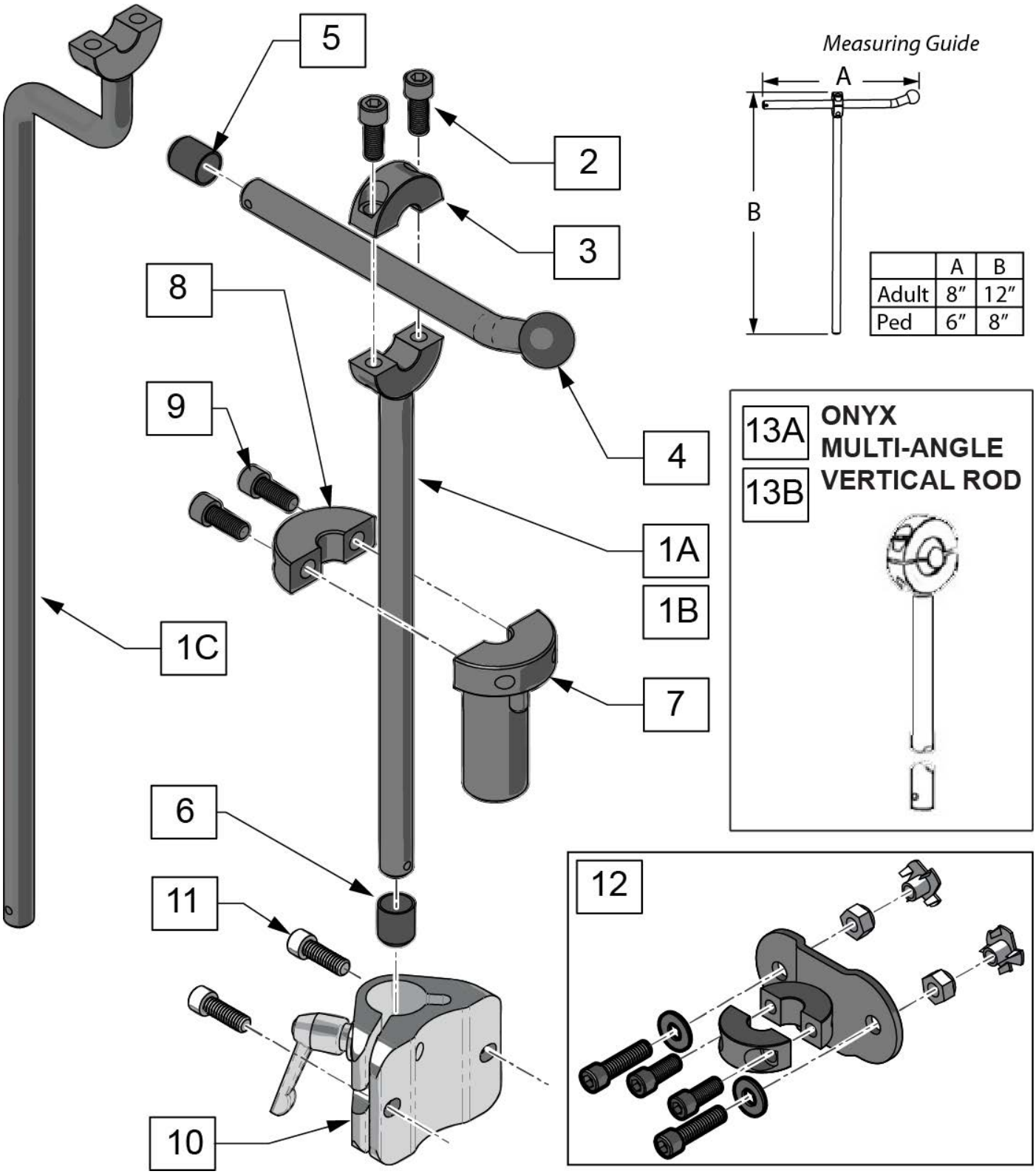

	A	B
Adult	8″	12″
Ped	6″	8″

Pos.	Item Number	Description
1A	OX6012	VERTICAL ROD 12" ONYX
1B	OX6008	BALLROD ONYX 8" VERTICAL
1C	OX6030	VERT ROD, 17.5" ONYX W/OFF-SET
4	MW004605	BALLROD 8" FIXD 3/4 W/20DG, BLK
5	MW000800	ENDCAP 7/16 ID VINYL BLK
12	M2175	MOUNT FIXED ONYX 7/16
13A	OX6035	MULTI-ANG VERT ROD, 12" ONYX
13B	OX6050	VERTICAL ROD 12"SQUARE ONYX
1A,2-6	OX7010	ONYX CORE MOUNT HDW, ADULT
1B,2-6	OX7030	ONYX CORE MOUNT HDW, PED
1C,2-6	OX6010	ONYX CORE OFFSET BAR MNTG HDW
7-11	M2100-WB	ONYX DETACH MOUNT BRKT

UNIVERSAL HEADREST MOUNT

Note: item 5 used with Linx and Axys headrest posts only; plate is used to space headrest mount away from back upholstery to allow for easier headrest removal.

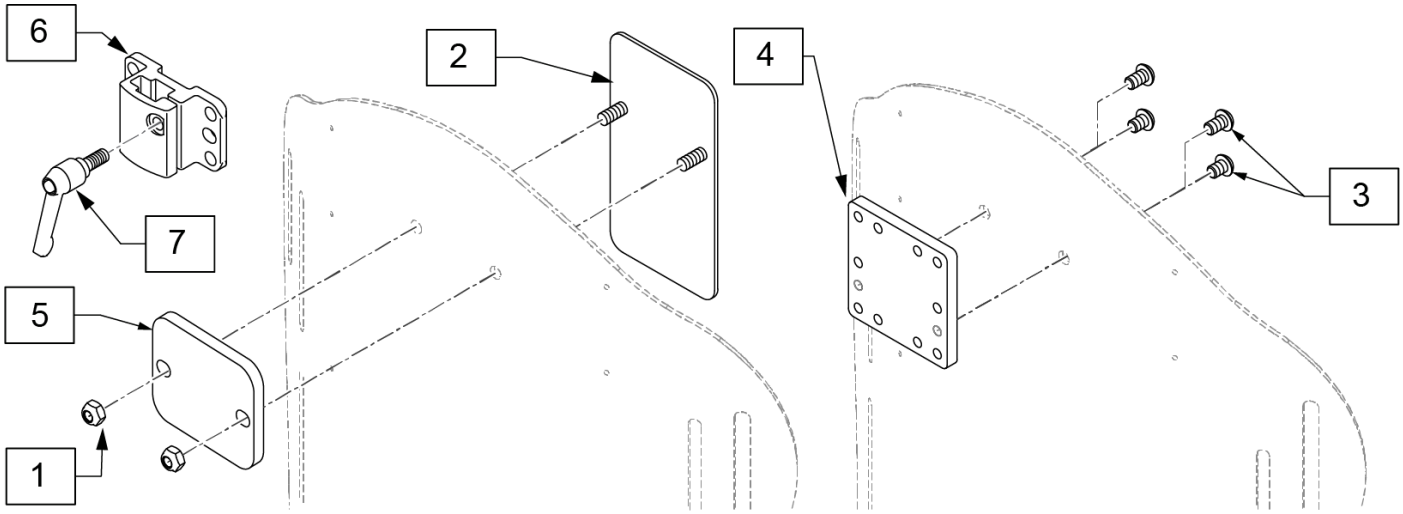

P/N	DESCRIPTION	APPLICATION
J3UHM	HEADREST PLATE ASSY	Universal Headrest Mount designed to mount most headrests in the market today, including Whitmyer
J3HDP	HEADREST BAG-O-BOLTS	Optional Mounting for Whitmyer Headrest Assemblies

8 HEADREST PLATE ASSEMBLY

ITEM #	ILLUSTRATION	DESCRIPTION	QTY
3		BHCS, M6X1X8, FULL, PL	2
		BHCS, M6X1X10, FULL, PL	2
4		PLATE ADAPTER HDRST UNIVERSAL	1

9 HEADREST BAG-O-BOLTS

ITEM #	ILLUSTRATION	DESCRIPTION	QTY
1		NUT HEX NYLOCK	2
2		NUT PLATE TRANSIT HEADREST	1
3		BHCS, M6X1X8, FULL, PL	2
		BHCS, M6X1X10, FULL, PL	2
5		SPACER LINX HEADREST MNT	1
6		MT .5 SQR TUBING RECEIVER BLK	1
7		KNOB PLAS ADJ LVR 1/4-20X20MM	1

Pos.	Item Number	Description
8	J3UHM	HEADREST PLATE ASSY
9	J3HDP	HEADREST BAG-O-BOLTS

ADJUST-A-PLUSH HEADREST PAD

[11/2011]

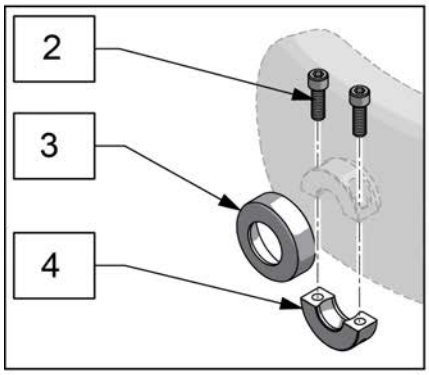

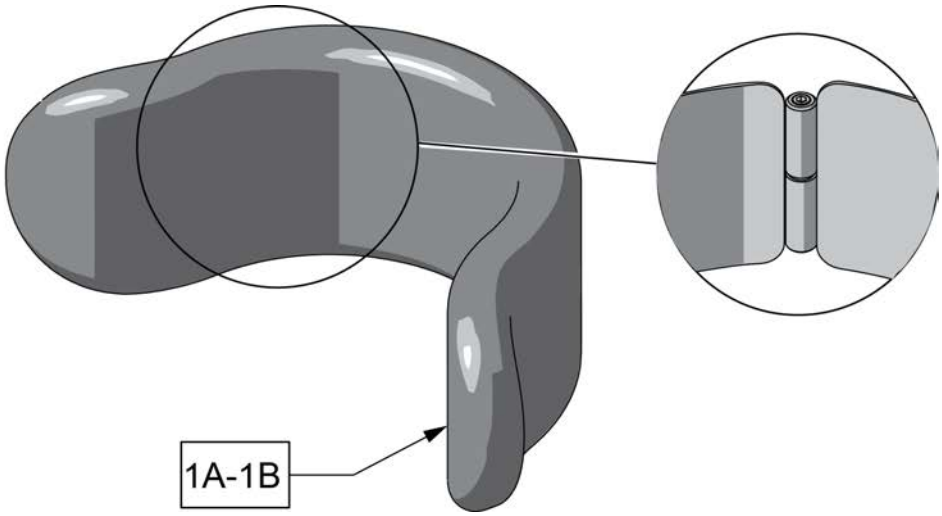

Pos.	Item Number	Description	Remarks
1A	PF8044	FOAM NARROW AJUSTAPLUSH	
1A	PC8044L	COVER, NAR ADJUST-A-PL, LY	Lycra
1A	PC8044V	COVER, NAR ADJUST-A-PL, DR	Dartex
1A	PC8044F	COVER NARROW ADJ-PLUSH/FLEECE	Fleece
1B	PF8088	FOAM STD AJUSTAPLUSH	
1B	PC8088L	COVER, STD ADJUST-A-PL, LY	Lycra
1B	PC8088V	COVER STD ADJ-PLUSH/RD	Dartex
1B	PC8088F	COVER STD AJUSTAPLUSH/FLEECE	Fleece
2	MF014600	1/4-28X5/8" SHCS- COLLAR BOLT	
3	MC100-WB	COVER 3/4"COLLAR/VINYL BLACK	
4	MW027100	COLLAR HALF RAD 3/4" THD. BLCK	
1A,2-4	P8044L	NARROW ADJ-A-PLUSH LYCRA	Lycra
1A,2-4	P8044V	NARROW ADJ-A-PLUSH DARTEX	Dartex
1B,2-4	P8088L	STANDARD ADJ-A-PLUSH LYCRA	Lycra
1B,2-4	P8088V	STANDARD ADJ-A-PLUSH DARTEX	Dartex

PLUSH HEADREST PAD

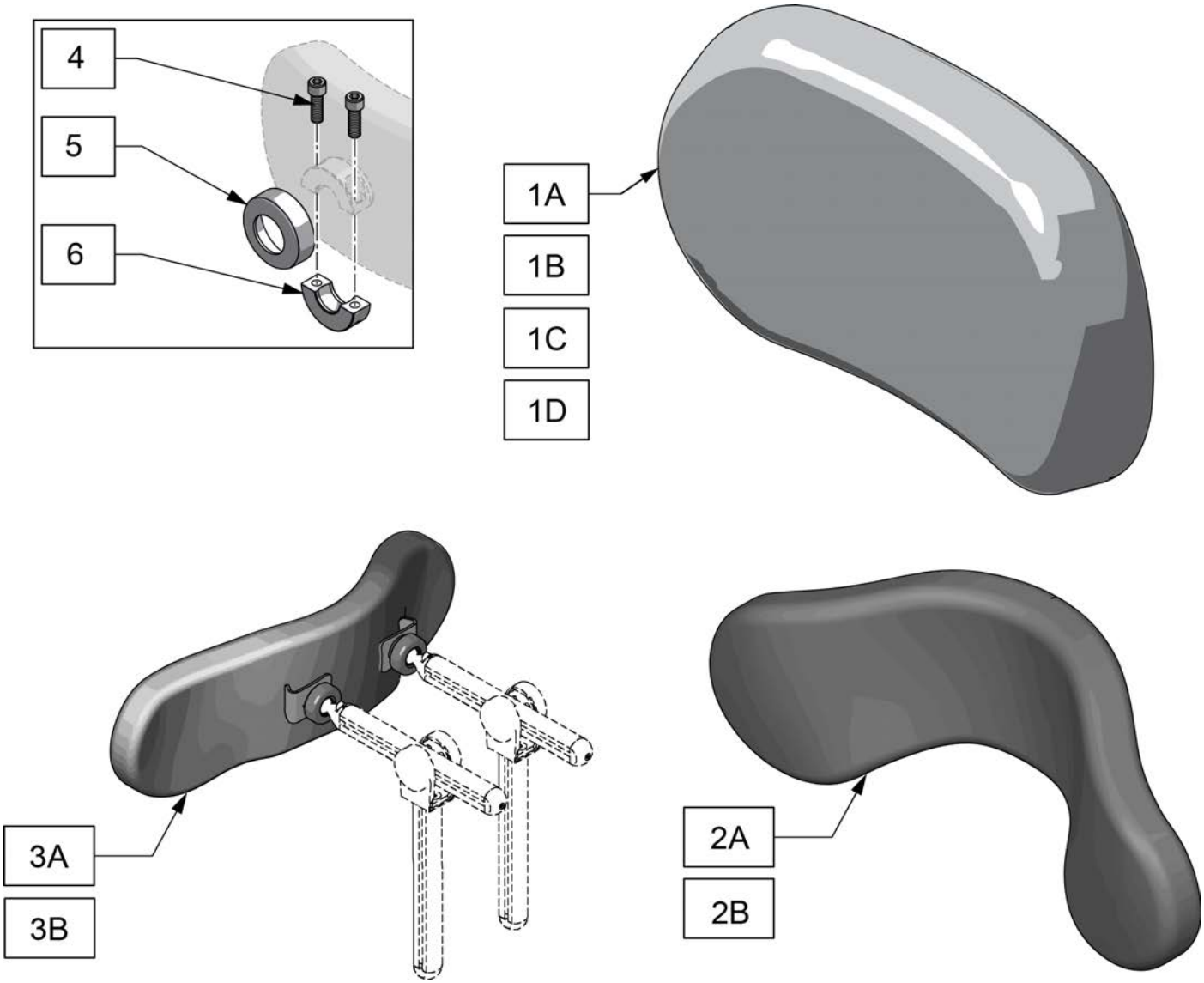

Pos.	Item Number	Description	Remarks
1A	PF605	REFOAM KIT 6" PLUSH	
1A	PC605L	COVER 6" PLUSH/LYCRA	Lycra
1A	PC605V	COVER 6" PLUSH/R'VSD DARTEXX	Dartex
1B	PF800	REFOAM KIT 8"PLUSH	
1B	PC800L	COVER, 8" PLUSH, LYCRA	Lycra
1B	PC800V	COVER, 8" PLUSH, DR	Dartex
1B	PC800F	COVER 8"PLUSH/FLEECE	Fleece
1B	PC800P	COVER 8"PLUSH/ALLURE NH	
1C	PF1000	REFOAM KIT 10"PLUSH	
1C	PC1000L	COVER, 10" PLUSH, LYCRA	Lycra
1C	PC1000V	COVER, 10" PLUSH, DR	Dartex
1C	PC1000F	COVER 10"PLUSH/FLEECE	Fleece
1D	PF1205	REFOAM KIT 12" NARROW PLUSH	
1D	PC1205L	COVER NARROW PLUSH/LYCRA	Lycra
1D	PC1205V	COVER NARROW PLUSH/R'VSD DARTEXX	Dartex
1D	PC1205F	COVER NARROW PLUSH/FLEECE	Fleece

Pos.	Item Number	Description	Remarks
2A	PF1400	REFOAM KIT 14"PLUSH	
2A	PC1400L	COVER, 14" PLUSH, LYCRA	Lycra
2A	PC1400V	COVER, 14" PLUSH, DR	Dartex
2A	PC1400F	COVER 14"PLUSH/FLEECE	Fleece
2B	PF1900	REFOAM KIT 19"PLUSH	
2B	PC1900L	COVER 19"PLUSH/LYCRA	Lycra
2B	PC1900V	COVER 19" PLUSH/R'VSD DARTEXX	Dartex
2B	PC1900F	COVER 19"PLUSH/FLEECE	Fleece
4	MF014600	1/4-28X5/8" SHCS- COLLAR BOLT	
5	MC100-WB	COVER 3/4"COLLAR/VINYL BLACK	
6	MW027100	COLLAR HALF RAD 3/4" THD. BLCK	
1A,4-6	P605L	PLUSH PAD, 6", LYCRA	Lycra
1A,4-6	P605V	PLUSH PAD, 6", DARTEX	Dartex
1B,4-6	P800L	PLUSH PAD, 8 IN LYCRA	Lycra
1B,4-6	P800V	PLUSH PAD, 8 IN DARTEX	Dartex
1C,4-6	P1000L	PLUSH PAD, 10 IN LYCRA	Lycra
1C,4-6	P1000V	PLUSH PAD, 10 IN DARTEX	Dartex
1D,4-6	P1205L	PLUSH PAD, 12 IN NARROW LYCRA	Lycra
1D,4-6	P1205V	PLUSH PAD, 12 IN NARROW DARTEX	Dartex
2A,4-6	P1400L	PLUSH PAD, 14 IN LYCRA	Lycra
2A,4-6	P1400V	PLUSH PAD, 14 IN DARTEX	Dartex
2B,4-6	P1900L	PLUSH PAD, 19 IN LYCRA	Lycra
2B,4-6	P1900V	PLUSH PAD, 19 IN DARTEX	Dartex
3A,4-6	P1420L	PLUSH PAD, 14 IN DUAL MOUNT LYCRA	Lycra
3A,4-6	P1420V	PLUSH PAD, 14 IN DUAL MOUNT DARTEX	Dartex
3B,4-6	P1920L	PLUSH PAD, 19 IN DUAL MOUNT LYCRA	Lycra
3B,4-6	P1920V	PLUSH PAD, 19 IN DUAL MOUNT DARTEX	Dartex

HEADS UP

Note: Parts not compatible with Headrest ordered prior to 5/27/2013, please replace complete headrest if ordered prior to 5/27/2013.

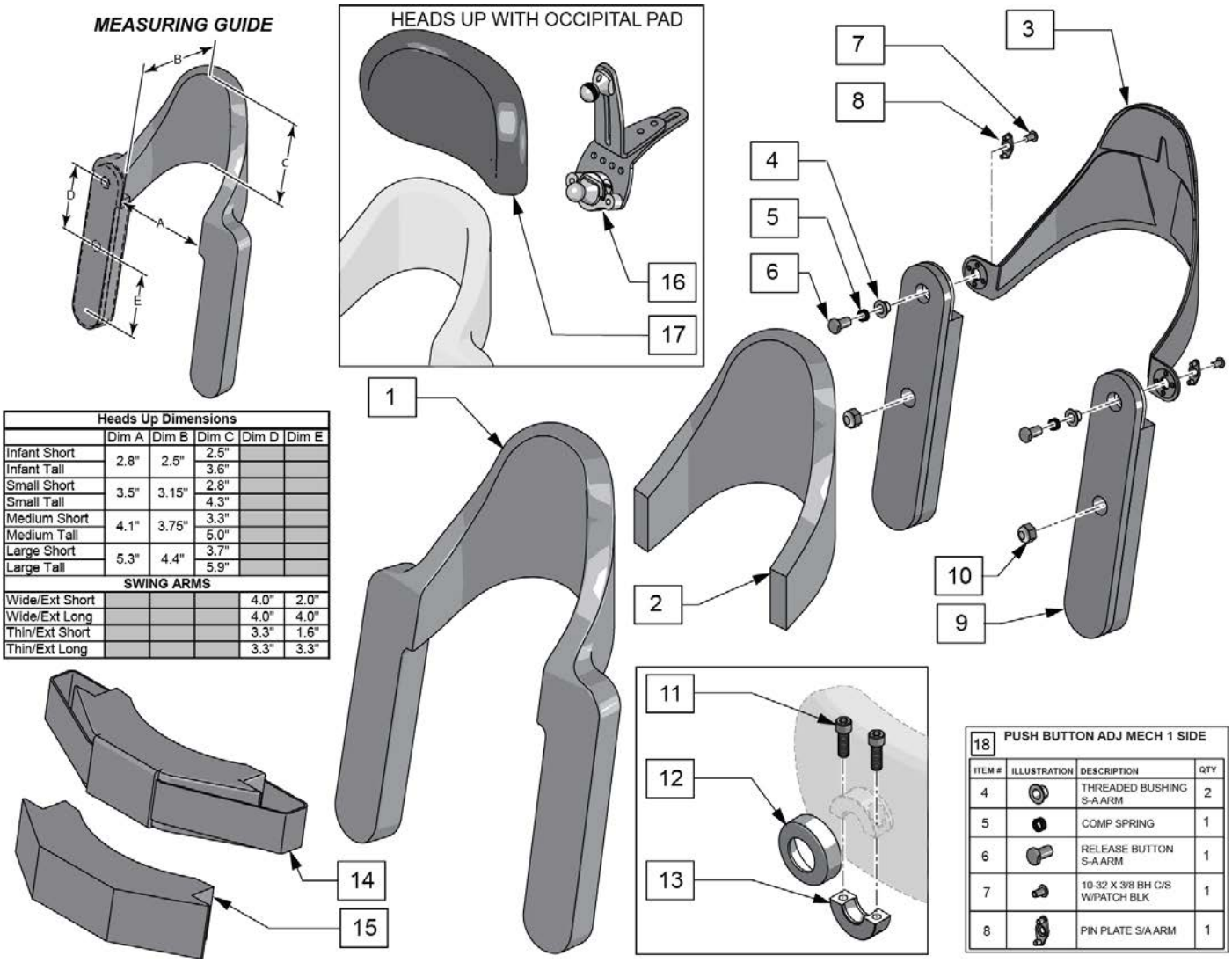

Heads Up Dimensions					
	Dim A	Dim B	Dim C	Dim D	Dim E
Infant Short	2.8"	2.5"	2.5"		
Infant Tall			3.6"		
Small Short	3.5"	3.15"	2.8"		
Small Tall			4.3"		
Medium Short	4.1"	3.75"	3.3"		
Medium Tall			5.0"		
Large Short	5.3"	4.4"	3.7"		
Large Tall			5.9"		
SWING ARMS					
Wide/Ext Short				4.0"	2.0"
Wide/Ext Long				4.0"	4.0"
Thin/Ext Short				3.3"	1.6"
Thin/Ext Long				3.3"	3.3"

Pos.	Item Number	Description	Remarks
		DARTEX	
1	125375	COV INFANT SHT WIDE SHT DARTEX	Short Cradle, Short Arms
1	125376	COV INFANT SHT WIDE LNG DARTEX	Short Cradle, Long Arms
1	125379	COV INFANT TALL THIN SHT DARTEX	Tall Cradle, Short Arms
1	125380	COV INFANT TALL THIN LNG DARTEX	Tall Cradle, Long Arms
1	125383	COV SMALL SHT WIDE SHT DARTEX	Short Cradle, Short Arms
1	125384	COV SMALL SHT WIDE LNG DARTEX	Short Cradle, Long Arms
1	125387	COV SMALL TALL THIN SHT DARTEX	Tall Cradle, Short Arms
1	125388	COV SMALL TALL THIN LNG DARTEX	Tall Cradle, Long Arms
1	125391	COV MEDIUM SHT WIDE SHT DARTEX	Short Cradle, Short Arms
1	125392	COV MEDIUM SHT WIDE LNG DARTEX	Short Cradle, Long Arms
1	125395	COV MEDIUM TALL THIN SHT DARTEX	Tall Cradle, Short Arms
1	125396	COV MEDIUM TALL THIN LNG DARTEX	Tall Cradle, Long Arms
1	125399	COV LARGE SHT WIDE SHT DARTEX	Short Cradle, Short Arms

Pos.	Item Number	Description	Remarks
1	125400	COV LARGE SHT WIDE LNG DARTEX	Short Cradle, Long Arms
1	125403	COV LARGE TALL THIN SHT DARTEX	Tall Cradle, Short Arms
1	125404	COV LARGE TALL THIN LNG DARTEX	Tall Cradle, Long Arms
		LYCRA	
1	125377	COV INFANT SHT WIDE SHT LYCRA	Short Cradle, Short Arms
1	125378	COV INFANT SHT WIDE LNG LYCRA	Short Cradle, Long Arms
1	125381	COV INFANT TALL THIN SHT LYCRA	Tall Cradle, Short Arms
1	125382	COV INFANT TALL THIN LNG LYCRA	Tall Cradle, Long Arms
1	125385	COV SMALL SHT WIDE SHT LYCRA	Short Cradle, Short Arms
1	125386	COV SMALL SHT WIDE LNG LYCRA	Short Cradle, Long Arms
1	125389	COV SMALL TALL THIN SHT LYCRA	Tall Cradle, Short Arms
1	125390	COV SMALL TALL THIN LNG LYCRA	Tall Cradle, Long Arms
1	125393	COV MEDIUM SHT WIDE SHT LYCRA	Short Cradle, Short Arms
1	125394	COV MEDIUM SHT WIDE LNG LYCRA	Short Cradle, Long Arms
1	125397	COV MEDIUM TALL THIN SHT LYCRA	Tall Cradle, Short Arms
1	125398	COV MEDIUM TALL THIN LNG LYCRA	Tall Cradle, Long Arms
1	125401	COV LARGE SHT WIDE SHT LYCRA	Short Cradle, Short Arms
1	125402	COV LARGE SHT WIDE LNG LYCRA	Short Cradle, Long Arms
1	125405	COV LARGE TALL THIN SHT LYCRA	Tall Cradle, Short Arms
1	125406	COV LARGE TALL THIN LNG LYCRA	Tall Cradle, Long Arms
2	125351	STANDARD CRADLE PAD INF SHT	
2	125352	STANDARD CRADLE PAD INF TL	
2	125353	STANDARD CRADLE PAD SM SHT	
2	125354	STANDARD CRADLE PAD SM TL	
2	125355	STANDARD CRADLE PAD MED SHT	
2	125356	STANDARD CRADLE PAD MED TL	
2	125357	STANDARD CRADLE PAD LRG SHT	
2	125358	STANDARD CRADLE PAD LRG TL	
2	125359	COMFORT CRADLE PAD INF SHT	
2	125360	COMFORT CRADLE PAD INF TL	
2	125361	COMFORT CRADLE PAD SM SHT	
2	125362	COMFORT CRADLE PAD SM TL	
2	125363	COMFORT CRADLE PAD MED SHT	
2	125364	COMFORT CRADLE PAD MED TL	
2	125365	COMFORT CRADLE PAD LRG SHT	
2	125366	COMFORT CRADLE PAD LRG TL	
3	125343	INFANT SHORT CRADLE SHELL	
3	125345	SMALL SHORT CRADLE SHELL	
3	125347	MEDIUM SHORT CRADLE SHELL	
3	125349	LARGE SHORT CRADLE SHELL	
3	125344	INFANT TALL CRADLE SHELL	
3	125346	SMALL TALL CRADLE SHELL	
3	125348	MEDIUM TALL CRADLE SHELL	
3	125350	LARGE TALL CRADLE SHELL	
9	125367	SWING ARM WIDE EXT SHORT RT	Used w/ Med & Large Cradle
9	125368	SWING ARM WIDE EXT SHORT LT	Used w/ Med & Large Cradle
9	125369	SWING ARM WIDE EXT LONG RT	Used w/ Med & Large Cradle
9	125370	SWING ARM WIDE EXT LONG LT	Used w/ Med & Large Cradle
9	125371	SWING ARM THIN EXT SHORT RT	Used w/ Infant & Small Cradle
9	125372	SWING ARM THIN EXT SHORT LT	Used w/ Infant & Small Cradle
9	125373	SWING ARM THIN EXT LONG RT	Used w/ Infant & Small Cradle
9	125374	SWING ARM THIN EXT LONG LT	Used w/ Infant & Small Cradle
10	106933	NUT NYLOCK THIN 1/4-20 ROHS	
11	MF014600	1/4-28x5/8" SHCS-COLLAR BOLT	
12	MC100-WB	COVER 3/4" COLLAR /VINYL BLACK	
13	MW027100	COLLAR HALF RAD 3/4" THD. BLCK	

Pos.	Item Number	Description	Remarks
15	125407	FOAM PAD CHIN PROMPT INFANT	
15	125408	FOAM PAD CHIN PROMPT SMALL	
15	125409	FOAM PAD CHIN PROMPT MEDIUM	
15	125410	FOAM PAD CHIN PROMPT LARGE	
14	125411	COVER PAD CHIN PROMPT INFANT	
14	125412	COVER PAD CHIN PROMPT SMALL	
14	125413	COVER PAD CHIN PROMPT MEDIUM	
14	125414	COVER PAD CHIN PROMPT LARGE	
16	M9275	S.O.F.T. BPA, SINGLE SUB-OCC	
17	P500L-WB	OCCIP PAD, PED, LYCRA	
17	P600L	OCCIP PAD, ADULT, LYCRA	
17	P800L	PLUSH PAD, 8 IN LYCRA	
17	P1000L	PAD 10" PLUSH/LYCRA	
17	P500V	OCCIP PAD, PED, DR	
17	P600V	OCCIP PAD, ADULT, DR	
17	P800V	PLUSH PAD, 8", DR	
17	P1000V	PLUSH PAD, 10", DR	
18	125415	PUSH BUTTON ADJ MECH 1 SIDE	

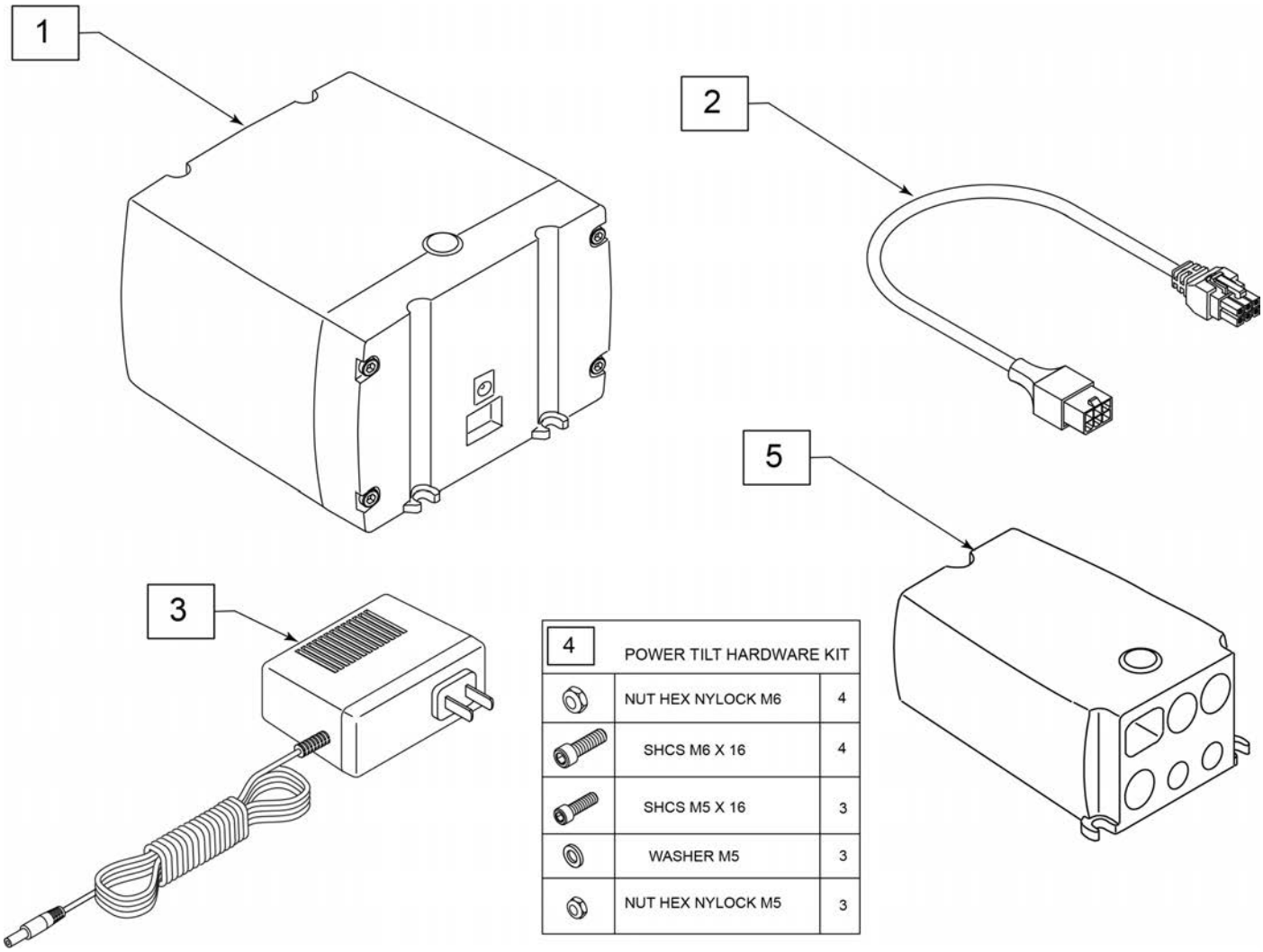

Pos.	Item Number	Description
1	164576	POWER TILT BATTERY
2	164575	BATTERY/CONTROL BOX CABLE
3	165409	POWER TILT CHARGER
4	165408	CONTROL/BATTERY BOX HARDWARE
5	253358	CONTROL BOX

MOUNTING PLATE AND ACTUATOR

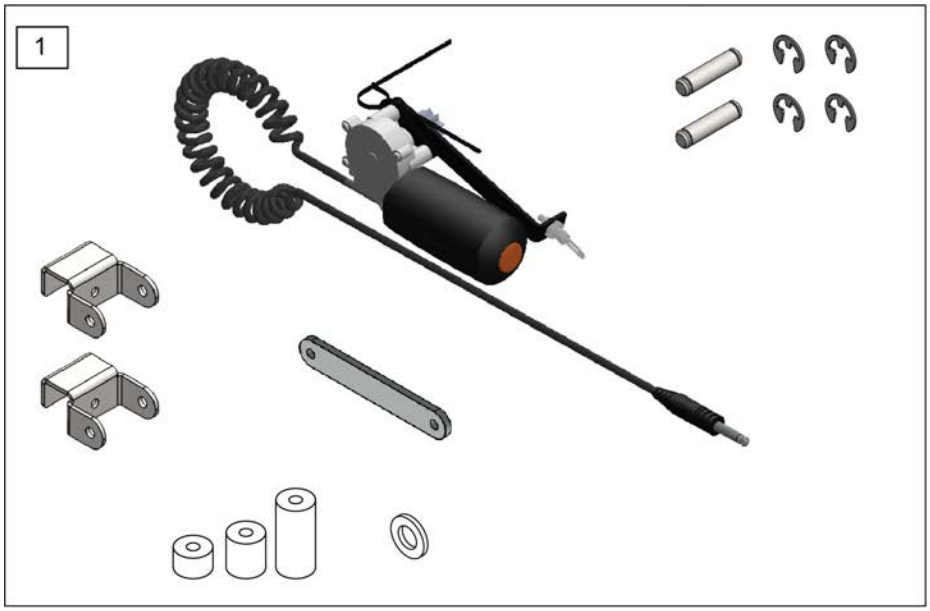

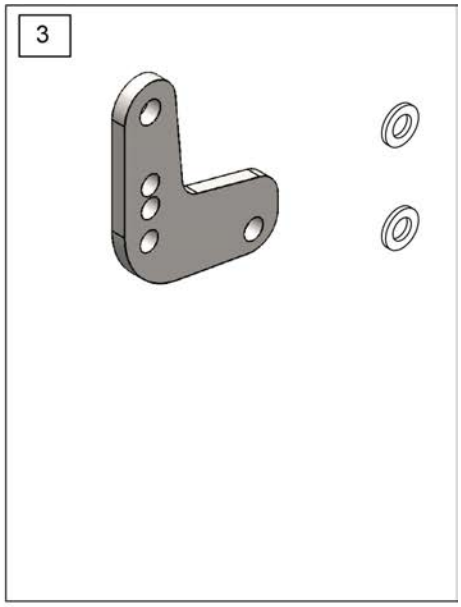

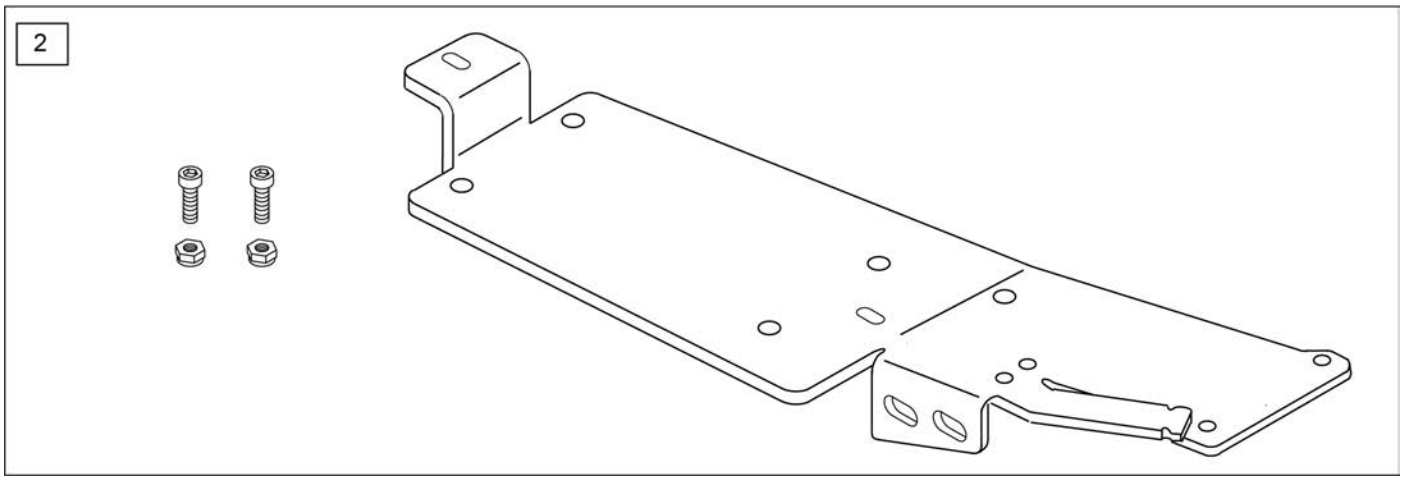

Pos.	Item Number	Description
1	165410	ACTUATOR WITH MOUNTING HARDWARE
2	165407	MOUNTING PLATE W HARDWARE
3	165406	STRUT ADAPTER

POWER TILT RETRO KIT

[08/12/2021]

NOTE: If you are retro-fitting the Power Tilt order 164562, if the dealer needs the left side mounted user control you will need to order item number 164589. Also REQUIRED is the appropriate Strut tube kits. See the applicable Strut tube parts pages.

Note: Only available from 0 to 60 degree setting, negative tilt angle settings with this Power Tilt Module is not available. So the settings from -1 to -5 is not available.

Note: No-Gos: Vent/Battery Tray, Mono Back, Adjustable locking or Length Adjustable Locking flip-up armrests or Contour or Ergo arm pads. If any of these options are present on the chair they must be removed or replaced with an available option to retro fit the power tilt to the chair.

Note: For the SR45, Power Tilt is only available with Single Post Height Adjustable Armrests which has the mounting holes for the user control to be mounted to the armrest.

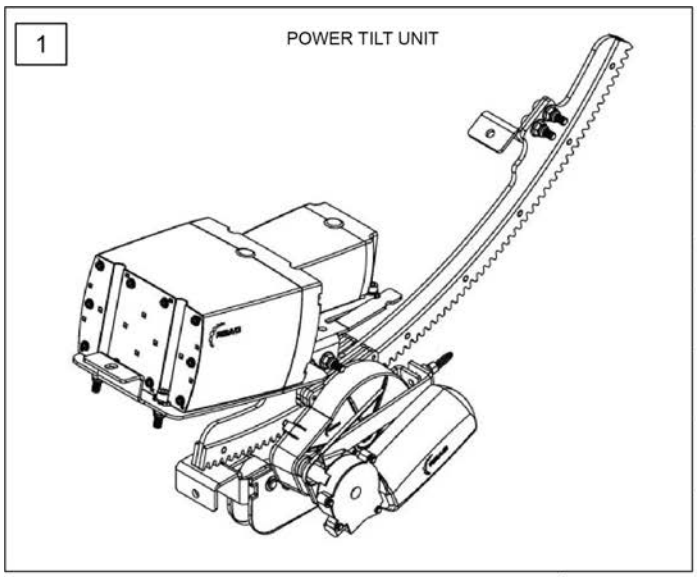

2 POWER TILT HARDWARE KIT

HHCS M6X1X35 PART PL	2
HHCS M6X1X30 PART NP ROHS	3
NUT HEX NYLOCK M6X1.0	8
SPACER 1/2 X 1/4 ID X 3/16 THK	2
3/4" SADDLE THIN	1
3/4" SADDLE 1" OD	2
SHCS 5/16-24 X 1	2

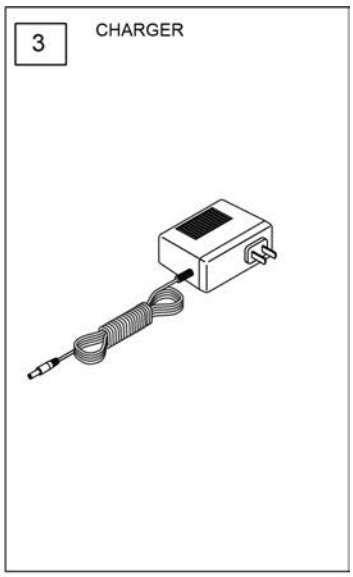

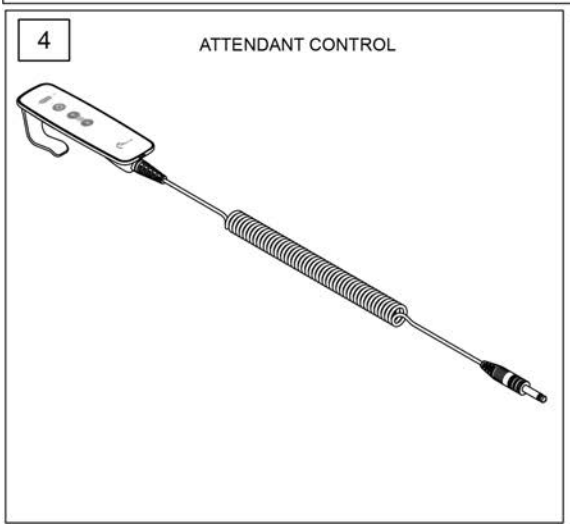

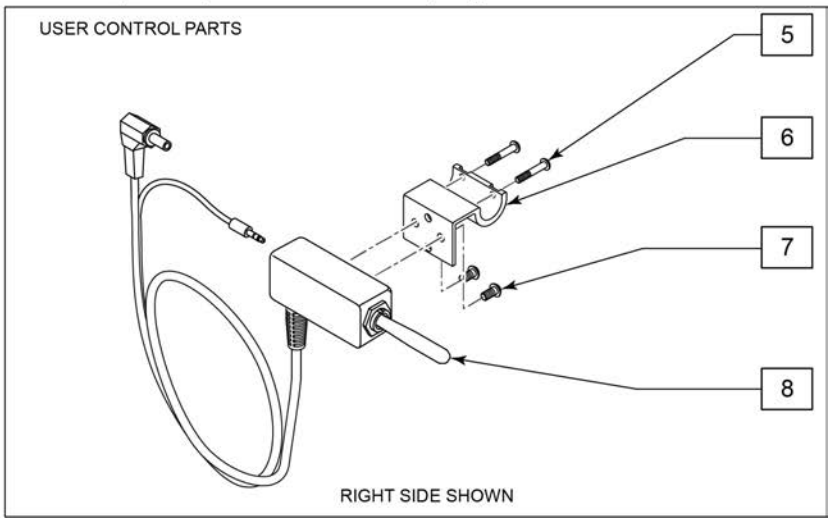

Pos.	Item Number	Description	Remarks
1-7	164562	GENERIC POWER TILT SERVICE KIT	mounting hardware and harnessing included.
2	164262	POWER TILT HARDWARE KIT	
3	165409	POWER TILT CHARGER	
4	164574	ATTENDANT CONTROL	
5-7	164263	POWER TILT USER CONTROL MOUNT	included in kit
8	164573	USER CONTROL RIGHT	Right standard sold separately
8	164589	USER CONTROL LEFT	Left side control sold separately

POWER TILT ADJUSTABLE STRUTS

[02/22/2021]

NOTE: REQUIRED if retrofitting the Power Tilt to a Quickie IRIS with the adjustable strut option.

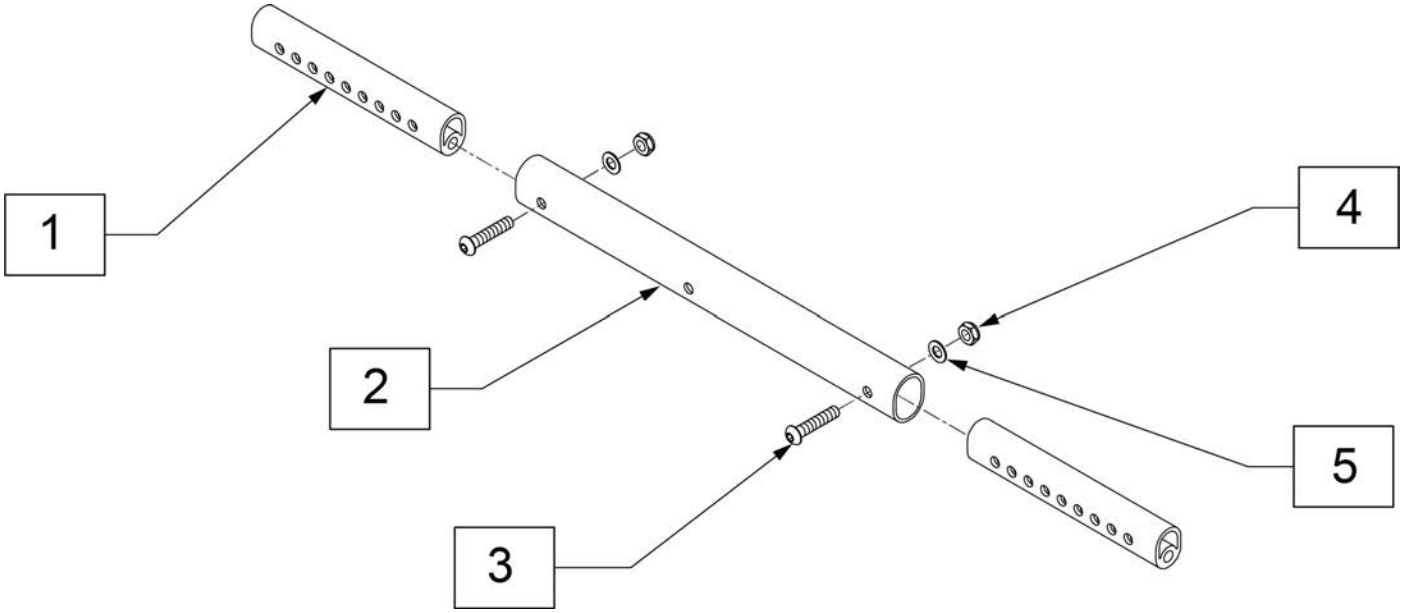

Pos.	Item Number	Description	Remarks
1-5	165405	14" STRUT ADJ RETRO KIT	set of 2
1-5	168141	15"-17" STRUT ADJ RETRO KIT	set of 2
1-5	164563	18"-21" STRUT ADJ RETRO KIT	set of 2

POWER TILT FIXED STRUTS

NOTE: REQUIRED if retrofitting the Power Tilt to a Quickie IRIS or Quickie SR45 with the fixed strut option.

NOTE: if the Quickie IRIS has transit, see the Power Tilt Transit Strut parts page and order the REQUIRED fixed strut transit tube based on the chair width.

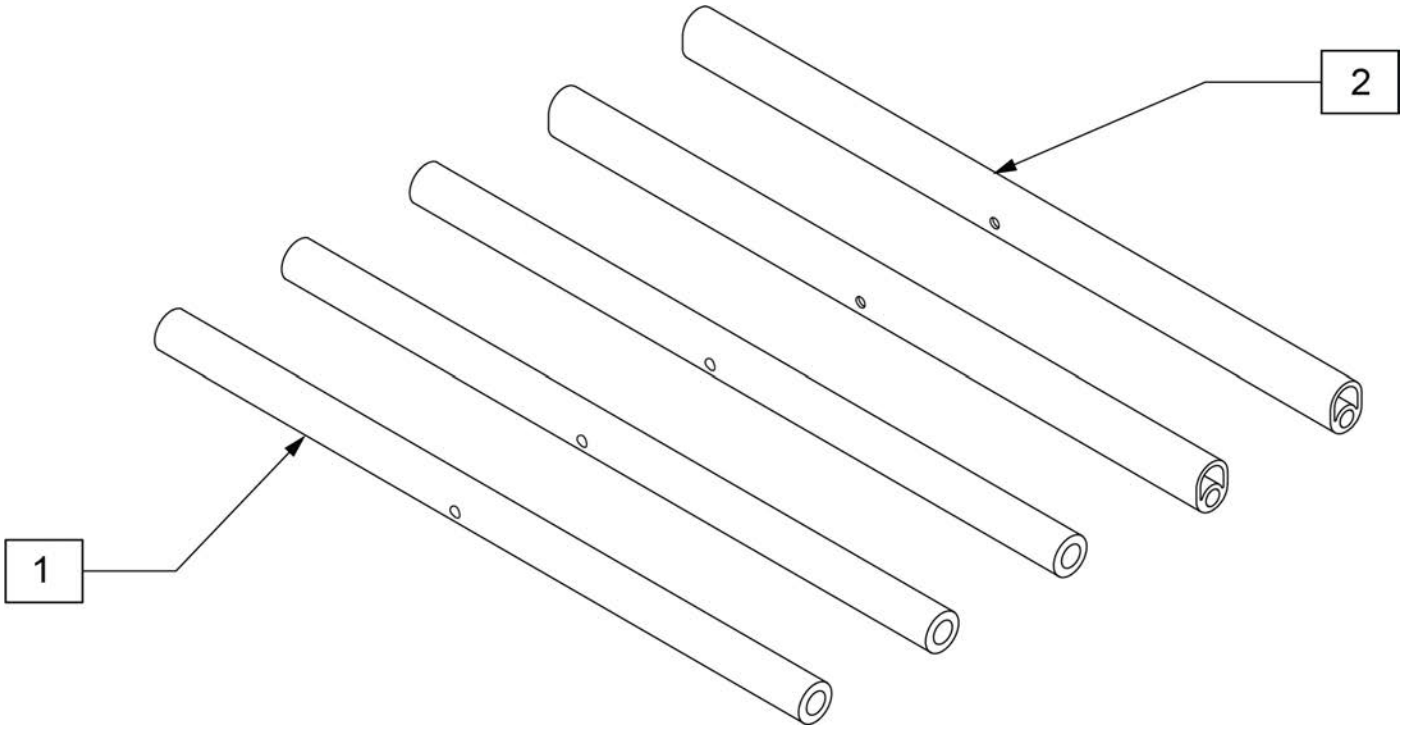

Pos.	Item Number	Description
1-2	164564	14" FIXED STRUT RETRO KIT
1-2	164565	15" FIXED STRUT RETRO KIT
1-2	164566	16" FIXED STRUT RETRO KIT
1-2	164567	17" FIXED STRUT RETRO KIT
1-2	164568	18" FIXED STRUT RETRO KIT
1-2	164569	19" FIXED STRUT RETRO KIT
1-2	164570	20" FIXED STRUT RETRO KIT
1-2	164571	21" FIXED STRUT RETRO KIT
1-2	164572	22" FIXED STRUT RETRO KIT
1-2	165403	23" FIXED STRUT RETRO KIT
1-2	165404	24" FIXED STRUT RETRO KIT

POWER TILT TRANSIT STRUT

[02/22/2021]

NOTE: Required if retro fitting the power tilt to a Quickie IRIS with fixed strut option.

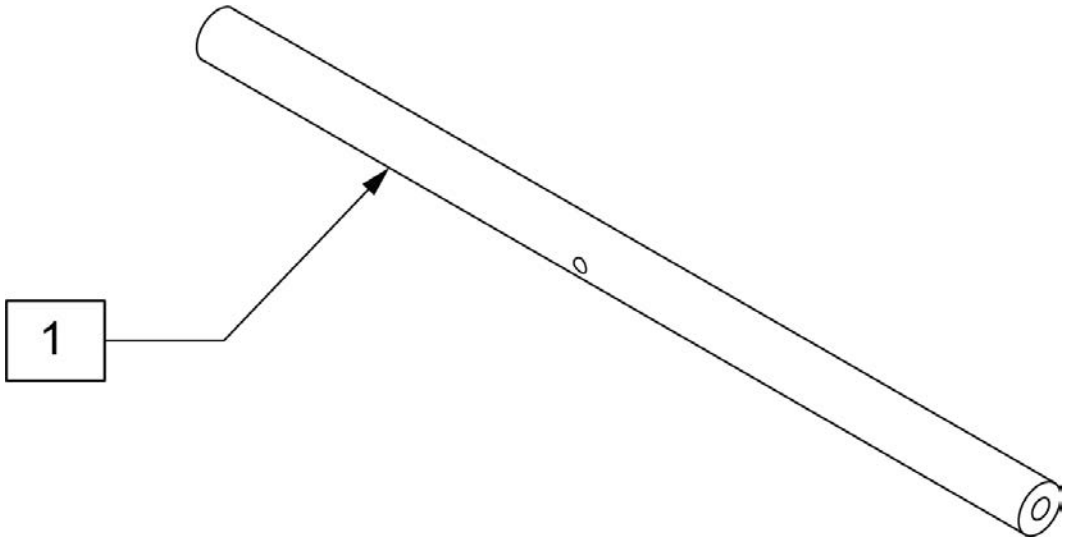

Pos.	Item Number	Description
1	168175	STRUT ROCKER TRANSIT 14W PT
1	168176	STRUT ROCKER TRANSIT 15W PT
1	168177	STRUT ROCKER TRANSIT 16W PT
1	168178	STRUT ROCKER TRANSIT 17W PT
1	168179	STRUT ROCKER TRANSIT 18W PT
1	168180	STRUT ROCKER TRANSIT 19W PT
1	168181	STRUT ROCKER TRANSIT 20W PT
1	168182	STRUT ROCKER TRANSIT 21W PT
1	168183	STRUT ROCKER TRANSIT 22W PT
1	168230	STRUT ROCKER TRANSIT 23W PT
1	168231	STRUT ROCKER TRANSIT 24W PT

60 DEG S/A HANGER (DISC 4-21-15)

NOTE: DISCONTINUED - PARTS ONLY ON GP SWNG-AWAY BEGINNING 4/4/15 & S/N GP-95902, KIDS Q2 SE BEGINNING 4/16/15 & S/N QKE-003425, LX BEGINNING 10/24/2008 & S/N LX-034330, LXI BEGINNING 4/25/15 & S/N LXI-060868, QTS BEGINNING 5/15/15 & S/N QT-044951, QTS SE BEGINNING 5/15/15 & S/N QTE-002092

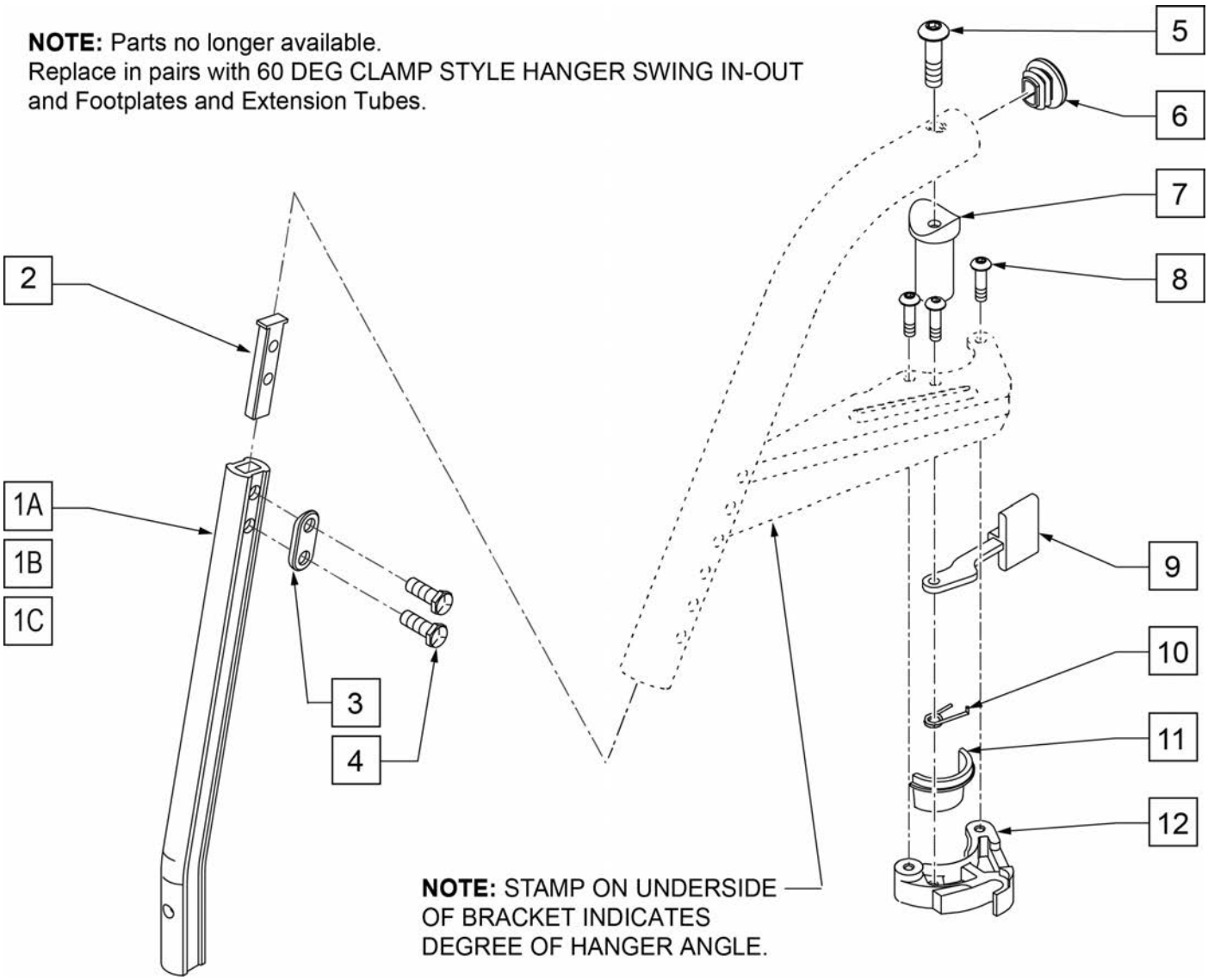

Pos.	Item Number	Description	Remarks
1A	550819	EXT TBE S/A ONLY SHT	SHORT
1B	550820	EXT TBE S/A ONLY MED	MEDIUM
1C	550821	EXT TBE S/A ONLY LONG	LONG
2	500078	INSERT D2 EXT TUBE	
3	483717	HANGER SADDLE	
4	221102	1/4-28 x 3/4 HEX HEAD C/S BLK W/PTCH	
5	226217	5/16-18 X 2" BH C/S BLK	
6	561378	END PLUG DBL "D" S525	
7	561197	PLASTIC PIVOT SADDLE	
8	226057	10/24 X .725 BTTN HD SOC BZ	
9	561079	S/A LATCH LEVER	
10	321136	S/A SPRING L RED	
10	321137	S/A SPRING R CLEAR	
11,12	881500	LATCH BLOCK ASSM R	
11,12	881501	LATCH BLOCK ASSM L	
8-12	881521	S/A LATCH KIT CASTING RIGHT	
8-12	881522	S/A LATCH KIT CASTING LEFT	

70 DEG S/A HANGER (DISC 4-21-15)

NOTE: DISCONTINUED - PARTS ONLY ON GP SWNG-AWAY BEGINNING 4/4/15 & S/N GP-95902, KIDS Q2 SE BEGINNING 4/16/15 & S/N QKE-003425, LX BEGINNING 10/24/2008 & S/N LX-034330, LXI BEGINNING 4/25/15 & S/N LXI-060868, QTS BEGINNING 5/15/15 & S/N QT-044951, QTS SE BEGINNING 5/15/15 & S/N QTE-002092

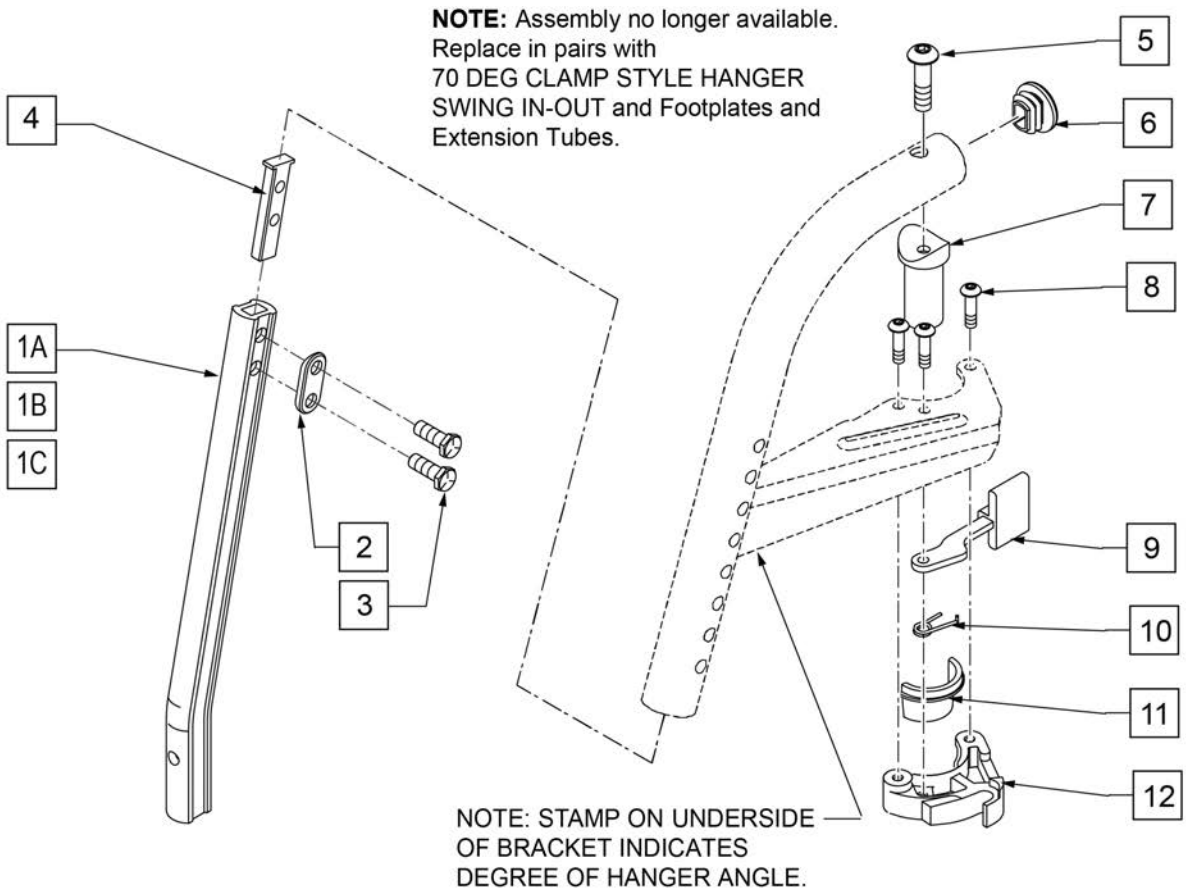

Pos.	Item Number	Description	Remarks
1A	550819	EXT TBE S/A ONLY SHT	SHORT
1B	550820	EXT TBE S/A ONLY MED	MEDIUM
1C	550821	EXT TBE S/A ONLY LONG	LONG
2	483717	HANGER SADDLE	
3	221102	1/4-28 x 3/4 HEX HEAD C/S BLK W/PTCH	
4	500078	INSERT D2 EXT TUBE	
5	226217	5/16-18 X 2" BH C/S BLK	
6	561378	END PLUG DBL "D" S525	
7	561197	PLASTIC PIVOT SADDLE	
8	226057	10/24 X .725 BTTN HD SOC BZ	
9	561079	S/A LATCH LEVER	
10	321136	S/A SPRING L RED	
10	321137	S/A SPRING R CLEAR	
11,12	881500	LATCH BLOCK ASSM R	
11,12	881501	LATCH BLOCK ASSM L	
8-12	881521	S/A LATCH KIT CASTING RIGHT	
8-12	881522	S/A LATCH KIT CASTING LEFT	

70 DEG V S/A HANGER (DISC 4-21-15) [09/2009]

NOTE: DISCONTINUED - PARTS ONLY ON GP SWNG-AWAY BEGINNING 4/4/15 & S/N GP-95902, KIDS Q2 SE BEGINNING 4/16/15 & S/N QKE-003425, LX BEGINNING 10/24/2008 & S/N LX-034330, LXI BEGINNING 4/25/15 & S/N LXI-060868, QTS BEGINNING 5/15/15 & S/N QT-044951, QTS SE BEGINNING 5/15/15 & S/N QTE-002092

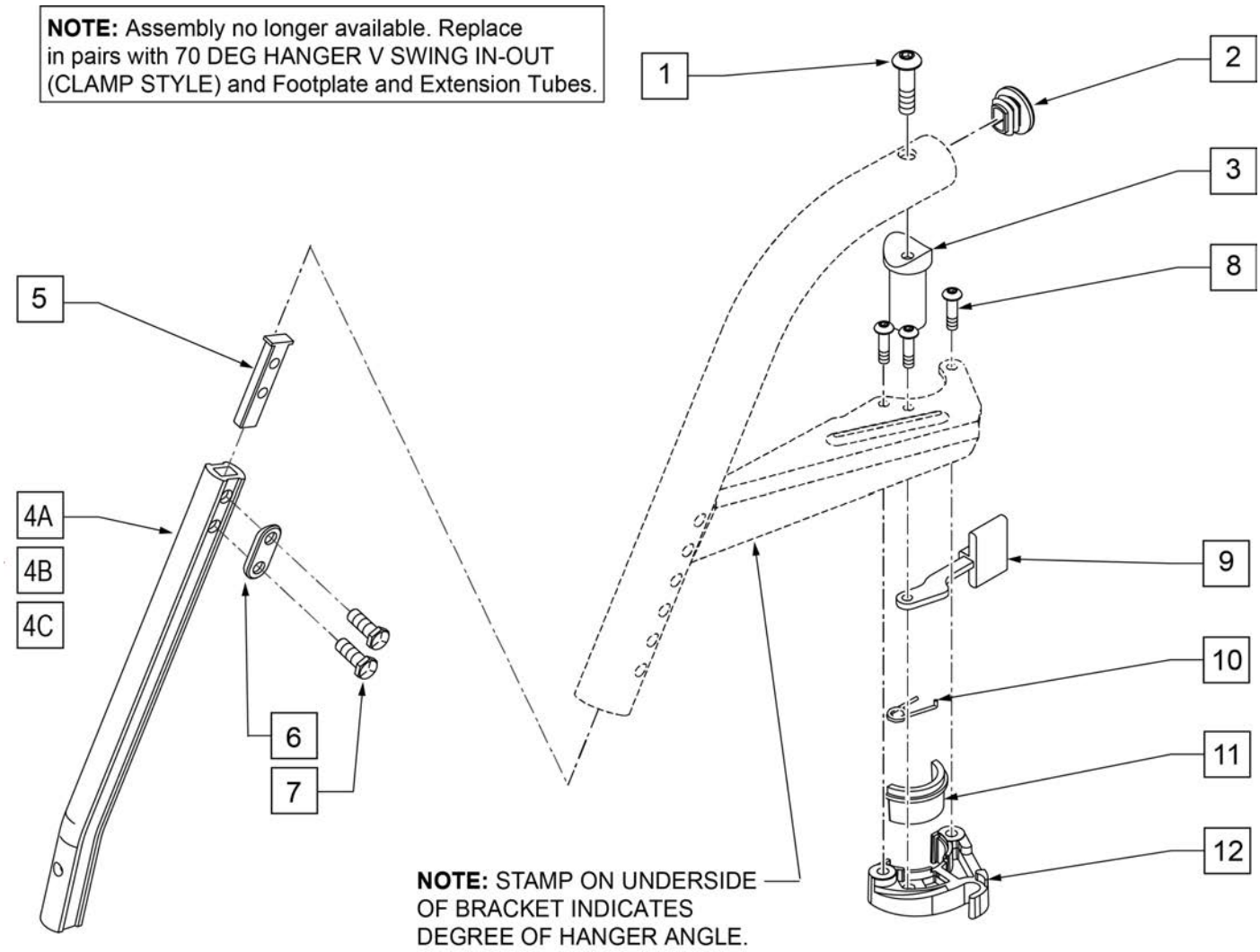

Pos.	Item Number	Description	Remarks
1	226217	5/16-18 x 2 BH C/S BLK	
2	561378	END PLUG DBL-D S525	
3	561197	PLASTIC PIVOT SADDLE	
4A	550834	EXT TBE INVIN ONLY D2 SHT R	RIGHT
4A	550835	EXT TBE INVIN ONLY D2 SHT L	LEFT
4B	550836	EXT TBE INVIN ONLY D2 MED R	RIGHT
4B	550837	EXT TBE INVIN ONLY D2 MED L	LEFT
4C	550838	EXT TBE INVIN ONLY D2 LNG R	RIGHT
4C	550839	EXT TBE INVIN ONLY D2 LNG L	LEFT
5	500078	INSERT D2 EXT TUBE	
6	483717	HANGER SADDLE	
7	221102	1/4-28 x 3/4 HEX HEAD C/S BLK W/PTCH	
8	226057	10/24 X .725 BTTN HD SOC BZ	

Pos.	Item Number	Description	Remarks
9	561079	S/A LATCH LEVER	
10	321136	S/A SPRING L RED	
10	321137	S/A SPRING R CLEAR	
11,12	881500	LATCH BLOCK ASSM R	
11,12	881501	LATCH BLOCK ASSM L	
8-12	881521	S/A LATCH KIT CASTING RIGHT	
8-12	881522	S/A LATCH KIT CASTING LEFT	

To have complete Footrest ship assembled, choose compatible Hanger + Footplate part numbers and add “ASSY-HNG-FP” to order

INSET FORMULA
0” Inset (Seat Width) = Footrest Width
1” Inset (Seat Width) -2” = Footrest Width
“V” Hanger (Seat Width) -4” = Footrest Width
Offset Hanger Receiver (Seat Width) +2” = Footrest Width

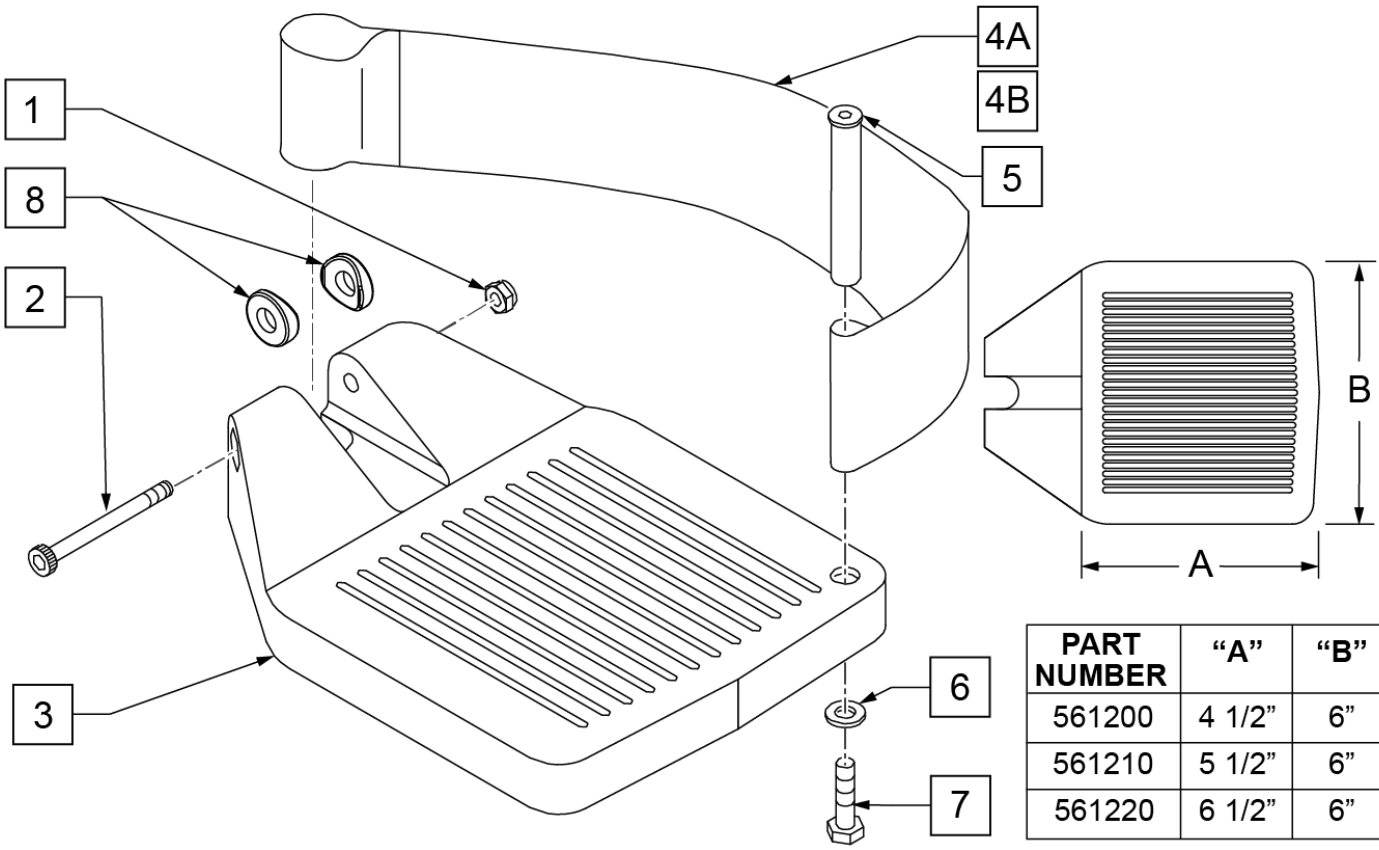

PART NUMBER	“A”	“B”
561200	4 1/2”	6”
561210	5 1/2”	6”
561220	6 1/2”	6”

Pos.	Item Number	Description	Remarks
1	106935	1/4 - 28 NYLOCK NUT	
2	226165	1/4 - 28 x 2 1/2 SOC C/S	
3	561200	COMPOSITE FOOTPLATE 14 -15 (16 -18 V)	14 -15 OR 16 -18V
3	561210	COMPOSITE FOOTPLATE 16 -17 (19 -20 V)	16 -17 OR 19 -20V
3	561220	COMPOSITE FOOTPLATE 18 -20	18 -20
4A	741151	HEEL LOOP 14-15 COMPOSITE (14 -15 or 16 -18V)	14 -15 OR 16 -18V
4A	741156	HEEL LOOP 16 -17 or 19 -20V	16 -17 OR 19 -20V
4A	741153	HEEL LOOP 18 -20 COMPOSITE/14-15 ANG ADJ	18 -20
4A	902270	HEEL LOOP COMPOSITE FT 14-15	PAIR 14 -15 OR 16 -18V
4A	902271	HEEL LOOP COMPOSITE FT 16-17	PAIR 16 -17 OR 19 -20V
4A	902272	HEEL LOOP COMPOSITE FT 18-20	PAIR 18 -20
4B	741154	HEEL LOOP 14-15 COMPOSITE HEMI	14 -15 HEMI
4B	741155	HEEL LOOP 16-17 COMPOSITE HEMI	16 -17 HEMI
4B	741153	HEEL LOOP 18-20 COMPOSITE HEMI	18 -10 HEMI
4B	902260	HEEL LOOPS HEMI COMPOSITE 14-15	PAIR 14 -15 HEMI
4B	902261	HEEL LOOPS HEMI COMPOSITE 16-17	PAIR 16 -17 HEMI
4B	902262	HEEL LOOPS HEMI COMPOSITE 18-20	PAIR 18 -20 HEMI
5	561040	HEEL LOOP PEG	
6	106944	1/4 AN WASHER FLAT THIN	

Pos.	Item Number	Description	Remarks
7	106958	HHCS 1/4-20 X 1 ROHS	
8	561003	3/4" SADDLE THIN	USED W/ ROUND EXT TUBES ONLY
1-3	921180	COMPOSITE FOOTPLATE ASSM 14-15	RIGHT (14 -15 OR 16 -18V) W/O HEEL LOOP
1-3	921181	COMPOSITE FOOTPLATE ASSM 14-15	LEFT (14 -15 OR 16 -18V) W/O HEEL LOOP
1-3	921182	COMPOSITE FOOTPLATE ASSM 16-17	RIGHT (16 -17 OR 19 -20V) W/O HEEL LOOP
1-3	921183	COMPOSITE FOOTPLATE ASSM 16-17	LEFT (16 -17 OR 19 -20V) W/O HEEL LOOP
1-3	921184	COMPOSITE FOOTPLATE ASSM 18-20	RIGHT (18 -20) W/O HEEL LOOP
1-3	921185	COMPOSITE FOOTPLATE ASSM 18-20	LEFT (18 -20) W/O HEEL LOOP
1-3	921151	COMPOSITE FOOTPLATE ASSM 14-15/16-18V	PAIR (14 -15 OR 16 -18V) W/O HEEL LOOP
1-3	921152	COMPOSITE FOOTPLATE ASSM 16-17/19-20V	PAIR (16 -17 OR 19 -20V) W/O HEEL LOOP
1-3	921153	COMPOSITE FOOTPLATE ASSM 18-20	PAIR (18 -20) W/O HEEL LOOP
1,2,3A,4-7	921190	COMPOSITE FOOTPLATE ASSM HL LP 14-15	RIGHT (14 -15 OR 16 -18V) W/ HEEL LOOP
1,2,3A,4-7	921191	COMPOSITE FOOTPLATE ASSM HL LP 14-15	LEFT (14 -15 OR 16 -18V) W/ HEEL LOOP
1,2,3A,4-7	921192	COMPOSITE FOOTPLATE ASSM HL LP 16-17	RIGHT (16 -17 OR 19 -20V) W/ HEEL LOOP
1,2,3A,4-7	921193	COMPOSITE FOOTPLATE ASSM HL LP 16-17	LEFT (16 -17 OR 19 -20V) W/ HEEL LOOP
1,2,3A,4-7	921194	COMPOSITE FOOTPLATE ASSM HL LP 18-20	RIGHT (18 -20) W/ HEEL LOOP
1,2,3A,4-7	921195	COMPOSITE FOOTPLATE ASSM HL LP 18-20	LEFT (18 -20) W/ HEEL LOOP
1,2,3A,4-7	921161	COMPOSITE FOOTPLATE ASSM HL 14-15/16-18V	PAIR (14 -15 OR 16 -18V) W/ HEEL LOOP
1,2,3A,4-7	921162	COMPOSITE FOOTPLATE ASSM HL 16-17/19-20V	PAIR (16 -17 OR 19 -20V) W/ HEEL LOOP
1,2,3A,4-7	921163	COMPOSITE FOOTPLATE ASSM HL 18-20	PAIR (18 -20) W/ HEEL LOOP
1,2,3B,4-7	921140	COMPOSITE FOOTPLATE ASSM HEMI HL LP 14-15	RIGHT (14 -15) W/ HEEL LOOP
1,2,3B,4-7	921141	COMPOSITE FOOTPLATE ASSM HEMI HL LP 14-15	LEFT (14 -15) W/ HEEL LOOP
1,2,3B,4-7	921142	COMPOSITE FOOTPLATE ASSM HEMI HL LP 16-17	RIGHT (16 -17) W/ HEEL LOOP
1,2,3B,4-7	921143	COMPOSITE FOOTPLATE ASSM HEMI HL LP 16-17	LEFT (16 -17) W/ HEEL LOOP
1,2,3B,4-7	921144	COMPOSITE FOOTPLATE ASSM HEMI HL LP 18-20	RIGHT (18 -20) W/ HEEL LOOP
1,2,3B,4-7	921145	COMPOSITE FOOTPLATE ASSM HEMI HL LP 18-20	LEFT (18 -20) W/ HEEL LOOP
1,2,3B,4-7	921167	COMPOSITE FOOTPLATE ASSM HEMI HL LPS 14-15	PAIR (14 -15) W/ HEEL LOOP
1,2,3B,4-7	921168	COMPOSITE FOOTPLATE ASSM HEMI HL LPS 16-17	PAIR (16 -17) W/ HEEL LOOP
1,2,3B,4-7	921169	COMPOSITE FOOTPLATE ASSM HEMI HL LPS 18-20	PAIR (18 -20) W/ HEEL LOOP
		Ship assembled part #	Use with multiple assemblies
	ASSY-HNG-FP	HANGER/FOOTPLATE ASSY REQUIRED	add with Hanger & Footplate kit

ADULT ANGLE-ADJUSTABLE FOOTPLATE EXT MOUNT [02/19/2020]

NOTE: FOR HIGH-MOUNT ADULT ANGLE-ADJUSTABLE FOOTPLATE, SEE "HIGH-MOUNT EXTENSION TUBE" PAGE.

NOTE: ORDER ITEMS 4B AND 7B FOR CHAIRS PRIOR TO 8/13/01.

NOTE: ONLY 1 WASHER PRIOR TO 8/13/01.

NOTE: See attached REFERENCE GUIDE.

To have complete Footrest ship assembled, choose compatible Hanger + Footplate part numbers and add "ASSY-HNG-FP" to order

INSET FORMULA
0" Inset (Seat Width) = Footrest Width
1" Inset (Seat Width) -2" = Footrest Width
"V" Hanger (Seat Width) -4" = Footrest Width
Offset Hanger Receiver (Seat Width) +2" = Footrest Width

MEASURING GUIDE

CHAIR WIDTH	"A"	"B"
10" - 11"	3 1/2"	7 1/4"
12" - 13"	4 1/2"	7 3/4"
14" - 15"	5 1/2"	7 3/4"
16" - 17"	6 1/2"	7 3/4"
18" - 20"	7 1/2"	7 3/4"

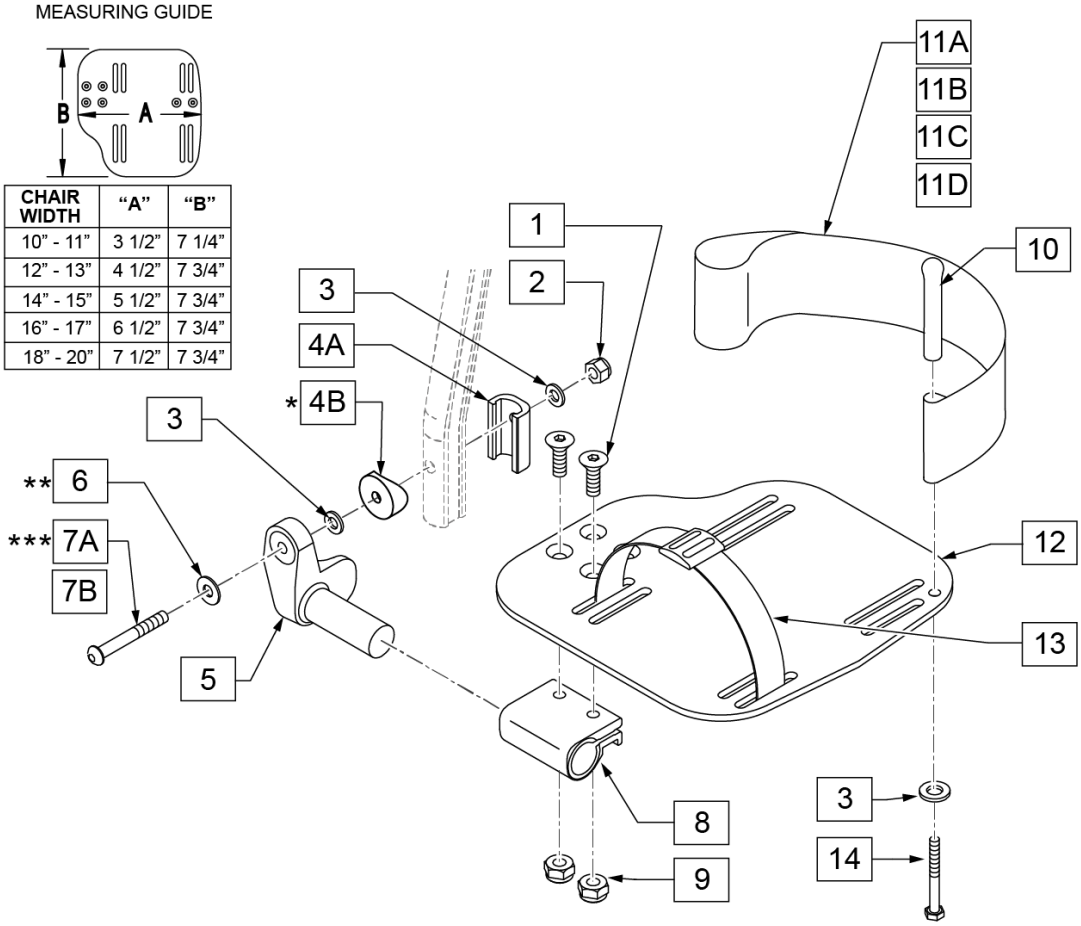

15 ADLT ANG ADJ FP D2 HDWR KIT

ITEM #	ILLUSTRATION	DESCRIPTION	QTY
1		1/4-28 X 7/8 FH C/S	2
2		1/4-28 AUTOMATION NUT	1
3		WASHER FLAT THIN AN 1/4	3
6		1/4" SAE WASHER	1
7A		BHCS 1/4-28 X 1-3/4	1
9		NUT NYLOCK THIN 1/4-28	2
10		HEEL LOOP PEG	1
14		1/4-20 X 1 HEX C/S	1

16 ADLT ANG ADJ FP RND HDWR KIT

ITEM #	ILLUSTRATION	DESCRIPTION	QTY
1		1/4-28 X 7/8 FH C/S	2
2		1/4-28 AUTOMATION NUT	1
3		WASHER FLAT THIN AN 1/4	3
4B		3/4" SADDLE 1" OD	1
6		1/4" SAE WASHER	1
7B		1/4-28 X 1.625 BH C/S BLK	1
9		NUT NYLOCK THIN 1/4-28	2
10		HEEL LOOP PEG	1
14		1/4-20 X 1 HEX C/S	1

Pos.	Item Number	Description	Remarks
1	106978	1/4-28 x 7/8 FH C/S	
2	106941	1/4-28 AUTOMATION NUT	

Pos.	Item Number	Description	Remarks
3	106944	WASHER FLAT THIN AN 1/4	
4A	483720	HANGER EXTENSION SADDLE LONG	USE W/ DOUBLE D EXT TUBE
4B	561055	3/4" SADDLE 1" OD	USE W/ ROUND EXT TUBE
5	541002	FTRST MOUNTING BRKT-3/8 RAD R	RIGHT
5	541003	FTRST MOUNTING BRKT-3/8 RAD L	LEFT
6	106945	WASHER FLAT SAE 1/4 ROHS	
7A	106962	BHCS 1/4-28 X 1-3/4 ROHS	use w/ Double D Ext Tube
7B	226167	1/4-28 x 1.625 BH C/S BLK	use w/ Round Ext Tube
8	550350	3/4" CLMP ADJ FT PLT	
9	106935	NUT NYLOCK THIN 1/4-28 ROHS	
10	561040	HEEL LOOP PEG	
11A	741154	HEEL LOOP 14-15 CMPST HEMI	used w/ 10-11" Adult Ang Adj Ftplts
11B	741155	HEEL LOOP 16-17 CMPST HEMI	used w/ 12 -13" Adult Ang Adj Ftplts
11C	741153	H/L 18-20 CMPST/14-15 ANG ADJ	used w/ 14-15"/16-17" Adult Ang Adj Ftplts
11D	741253	HEEL LOOP ADLT ADJ F/PLT 18-20	used w/ 18 -20" Adult Ang Adj Ftplts
12	500656	ADLT ANGL ADJ F/PLT 10/11" R	RIGHT
12	500657	ADLT ANGL ADJ F/PLT 10/11" L	LEFT
12	500658	ADLT ANGL ADJ F/PLT 12/13" R	RIGHT
12	500659	ADLT ANGL ADJ F/PLT 12/13" L	LEFT
12	500660	ADLT ANGL ADJ F/PLT 14/15	RIGHT
12	500661	ADLT ANGL ADJ F/PLT 14/15	LEFT
12	500662	ADLT ANGL ADJ F/PLT 16/17	RIGHT
12	500663	ADLT ANGL ADJ F/PLT 16/17	LEFT
12	500664	ADLT ANGL ADJ F/PLT 18-20	RIGHT
12	500665	ADLT ANGL ADJ F/PLT 18-20	LEFT
13	740260	TOE/ANKLE STRAP ADJ ADLT F/PLT	
14	106958	1/4-20 x 1 HEX C/S	
15	101533	ADLT ANG ADJ FP D2 HDWR KIT	for Double D Ext Tubes; Kit for one side
16	101534	ADLT ANG ADJ FP RND HDWR KIT	for Round Ext Tubes (Q2 HP only); Kit for one side
1-3,5,6,8,9,12	820526	AD ANG ADJ F/PLT R 12"/13" OMIT HL	RIGHT
1-3,5,6,8,9,12	820536	AD ANG ADJ F/PLT L 12"/13" OMT HL	LEFT
1-3,5,6,8,9,12	820460	FP ADLT ADJ 14/15 OMIT HL	RIGHT
1-3,5,6,8,9,12	820462	FP ADLT ADJ 14/15 OMIT HL	LEFT
1-3,5,6,8,9,12	820464	FP ADLT ADJ 16/17 OMIT HL	RIGHT
1-3,5,6,8,9,12	820466	FP ADLT ADJ 16/17 OMIT HL	LEFT
1-3,5,6,8,9,12	820468	FP ADLT ADJ 18-20 OMIT HL	RIGHT
1-3,5,6,8,9,12	820470	FP ADLT ADJ 18-20 OMIT HL	LEFT
1-3,5,6,8,9,12	921466	ADLT ANGL ADJ F/PLT 12"/13" OMIT HL	PAIR
1-3,5,6,8,9,12	921320	FP ADLT ADJ 14/15 OMIT HL	PAIR
1-3,5,6,8,9,12	921322	FP ADLT ADJ 16/17 OMIT HL	PAIR
1-3,5,6,8,9,12	921324	FP ADLT ADJ 18-20 OMIT HL	PAIR
1-3,5,6,8,9,11B,12	820522	AD ANGL ADJ F/PLT R 12/13" H/L	RIGHT
1-3,5,6,8,9,11B,12	820532	AD ANGL ADJ F/PLT L 12/13" H/L	LEFT
1-3,5,6,8-10,11C, 12,14	820461	FP ADLT ADJ 14/15 HL	RIGHT
1-3,5,6,8-10,11C, 12,14	820463	FP ADLT ADJ 14/15 HL	LEFT
1-3,5,6,8-10,11C, 12,14	820465	FP ADLT ADJ 16/17 HL	RIGHT
1-3,5,6,8-10,11C, 12,14	820467	FP ADLT ADJ 16/17 HL	LEFT
1-3,5,6,8-10,11D, 12,14	820469	FP ADLT ADJ 18-20 HL	RIGHT
1-3,5,6,8-10,11D, 12,14	820471	FP ADLT ADJ 18-20 HL	LEFT
1-3,5,6,8-10,11B, 12,14	921462	ADLT ANGL ADJ F/PLATE 12"/13" HL	PAIR
1-3,5,6,8-10,11C, 12,14	921321	FP ADLT ADJ 14/15 HL	PAIR
1-3,5,6,8-10,11C, 12,14	921323	FP ADLT ADJ 16/17 HL	PAIR
1-3,5,6,8-10,11D, 12,14	921325	FP ADLT ADJ 18-20 HL	PAIR
		Ship assembled part #	Use with multiple assemblies
	ASSY-HNG-FP	HANGER/FOOTPLATE ASSY REQUIRED	add with Hanger & Footplate kit

KIDS ANGLE ADJUSTABLE FOOTPLATE EXT MOUNT

[08/22/2019]

Note: Footplate Assemblies are set to footrest width; please see "Footplate Formula" table for seat width conversion.

Note: V Style Hangers are not available on Swing Away Style chairs effective 7/14/14; see the "Prior To" ordering guide for V Style footplate assemblies.

Note: Zippie Iris (ZRS&ZRSE) and Zippie TS (Z1A&Z1SE) only use Straight Extension Tube.

Note: if chair has High Mount Ext Tubes or if switching to High Mount Ext Tubes, see KAA Footplate w/ High Mount Extension Ordering Guide.

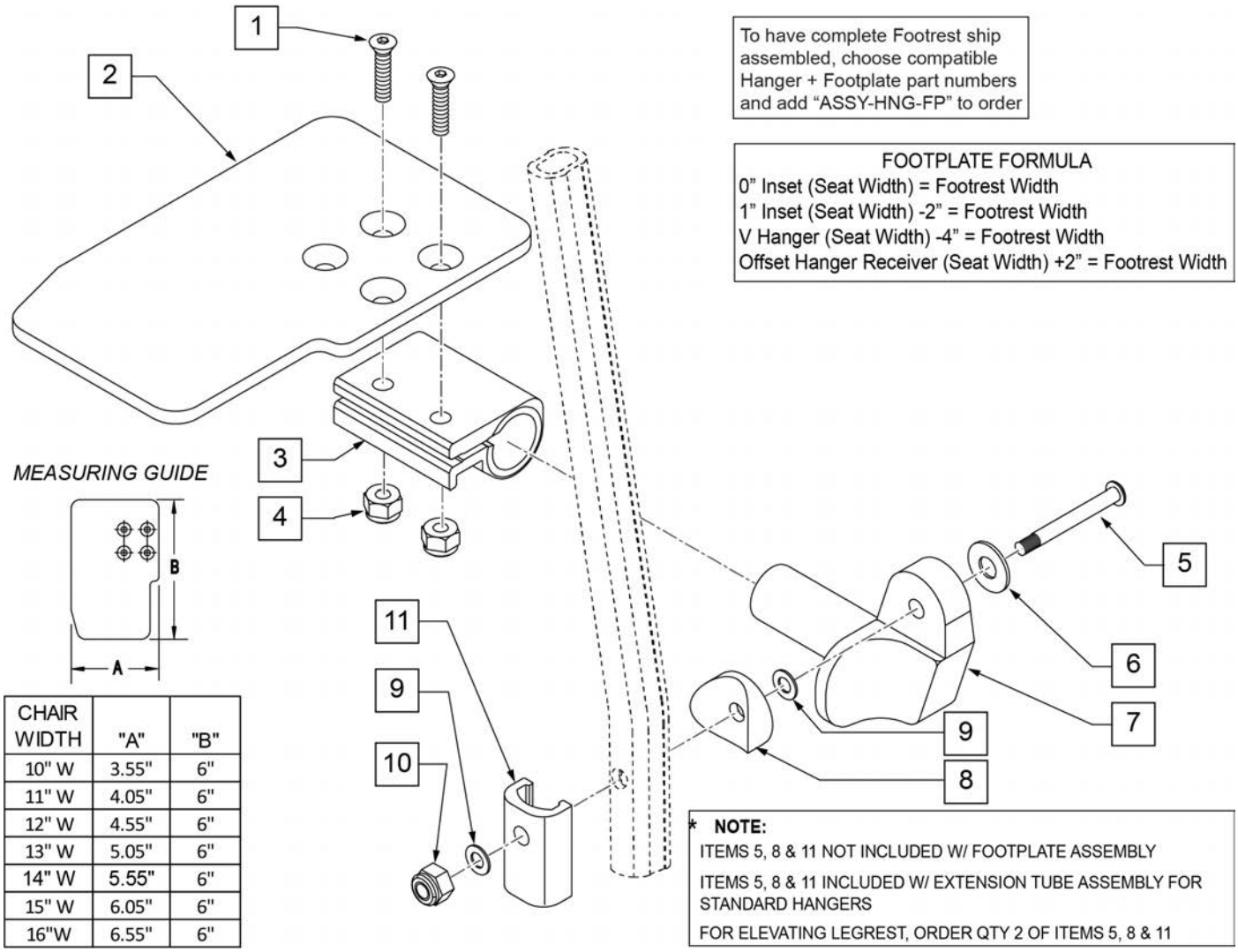

CHAIR WIDTH	"A"	"B"
10" W	3.55"	6"
11" W	4.05"	6"
12" W	4.55"	6"
13" W	5.05"	6"
14" W	5.55"	6"
15" W	6.05"	6"
16"W	6.55"	6"

Pos.	Item Number	Description	Remarks
1	106978	FHCS 1/4 -28 x 7/8 ROHS	

Pos.	Item Number	Description	Remarks
2	500635	KIDS ANGL ADJ F/PLT 10" R	Right
2	500636	KIDS ANGL ADJ F/PLT 10" L	Left
2	500637	KIDS ANGL ADJ F/PLT 11" R	Right
2	500638	KIDS ANGL ADJ F/PLT 11" L	Left
2	500639	KIDS ANGL ADJ F/PLT 12" R	Right
2	500640	KIDS ANGL ADJ F/PLT 12" L	Left
2	500641	KIDS ANGL ADJ F/PLT 13" R	Right
2	500642	KIDS ANGL ADJ F/PLT 13" L	Left
2	500643	KIDS ANGL ADJ F/PLT 14" R	Right
2	500644	KIDS ANGL ADJ F/PLT 14" L	Left
2	500645	KIDS ANGL ADJ F/PLT 15" R	Right
2	500646	KIDS ANGL ADJ F/PLT 15" L	Left
2	500647	KIDS ANGL ADJ F/PLT 16" R	Right
2	500648	KIDS ANGL ADJ F/PLT 16" L	Left
3	550350	3/4" CLAMP ADJ FOOTPLATE	
4	106935	NUT NYLOCK THIN 1/4 -28 ROHS	
5	106962	1/4-28 x 1 3/4 BH C/S BLK ZN (D2 EXTENSION TUBES)	
5	226167	1/4-28 x 1.625 BH C/S BLK (ROUND EXTENSION TUBES)	
6	106945	1/4 SAE WASHER	
7	541002	FTRST MOUNTING BRKT-3/8 RAD R	
7	541003	FTRST MOUNTING BRKT-3/8 RAD L	
8	561055	3/4" SADDLE 1" OD	
9	106944	WASHER FLAT THIN AN 1/4 ROHS	
10	106941	NUT AUTOMATION 1/4 -28 ROHS	
11	483720	HANGER EXTENSION SADDLE LONG	Use with Double D Ext Tube
1-4,6,7,9,10	828850	KIDS ANG ADJ F/PLT EXT-MNT 10"R	Right
1-4,6,7,9,10	828851	KIDS ANG ADJ F/PLT EXT-MNT 10"L	Left
1-4,6,7,9,10	828852	KIDS ANG ADJ F/PLT EXT-MNT 11"R	Right
1-4,6,7,9,10	828853	KIDS ANG ADJ F/PLT EXT-MNT 11"L	Left
1-4,6,7,9,10	828854	KIDS ANG ADJ F/PLT EXT-MNT 12"R	Right
1-4,6,7,9,10	828855	KIDS ANG ADJ F/PLT EXT-MNT 12"L	Left
1-4,6,7,9,10	828856	KIDS ANG ADJ F/PLT EXT-MNT 13"R	Right
1-4,6,7,9,10	828857	KIDS ANG ADJ F/PLT EXT-MNT 13"L	Left
1-4,6,7,9,10	828858	KIDS ANG ADJ F/PLT EXT-MNT 14"R	Right
1-4,6,7,9,10	828859	KIDS ANG ADJ F/PLT EXT-MNT 14"L	Left
1-4,6,7,9,10	828860	KIDS ANG ADJ F/PLT EXT-MNT 15"R	Right
1-4,6,7,9,10	828861	KIDS ANG ADJ F/PLT EXT-MNT 15"L	Left
1-4,6,7,9,10	828862	KIDS ANG ADJ F/PLT EXT-MNT 16"R	Right
1-4,6,7,9,10	828863	KIDS ANG ADJ F/PLT EXT-MNT 16"L	Left
1-4,6,7,9,10	921280	KIDS ANG ADJ F/PLT EXT-MNT 10"	Pair
1-4,6,7,9,10	921281	KIDS ANG ADJ F/PLT EXT-MNT 11"	Pair
1-4,6,7,9,10	921282	KIDS ANG ADJ F/PLT EXT-MNT 12"	Pair
1-4,6,7,9,10	921283	KIDS ANG ADJ F/PLT EXT-MNT 13"	Pair
1-4,6,7,9,10	921284	KIDS ANG ADJ F/PLT EXT-MNT 14"	Pair
1-4,6,7,9,10	921285	KIDS ANG ADJ F/PLT EXT-MNT 15"	Pair
1-4,6,7,9,10	921286	KIDS ANG ADJ F/PLT EXT-MNT 16"	Pair
		Ship assembled part #	Use with multiple assemblies
	ASSY-HNG-FP	HANGER/FOOTPLATE ASSY REQUIRED	add with Hanger & Footplate kit

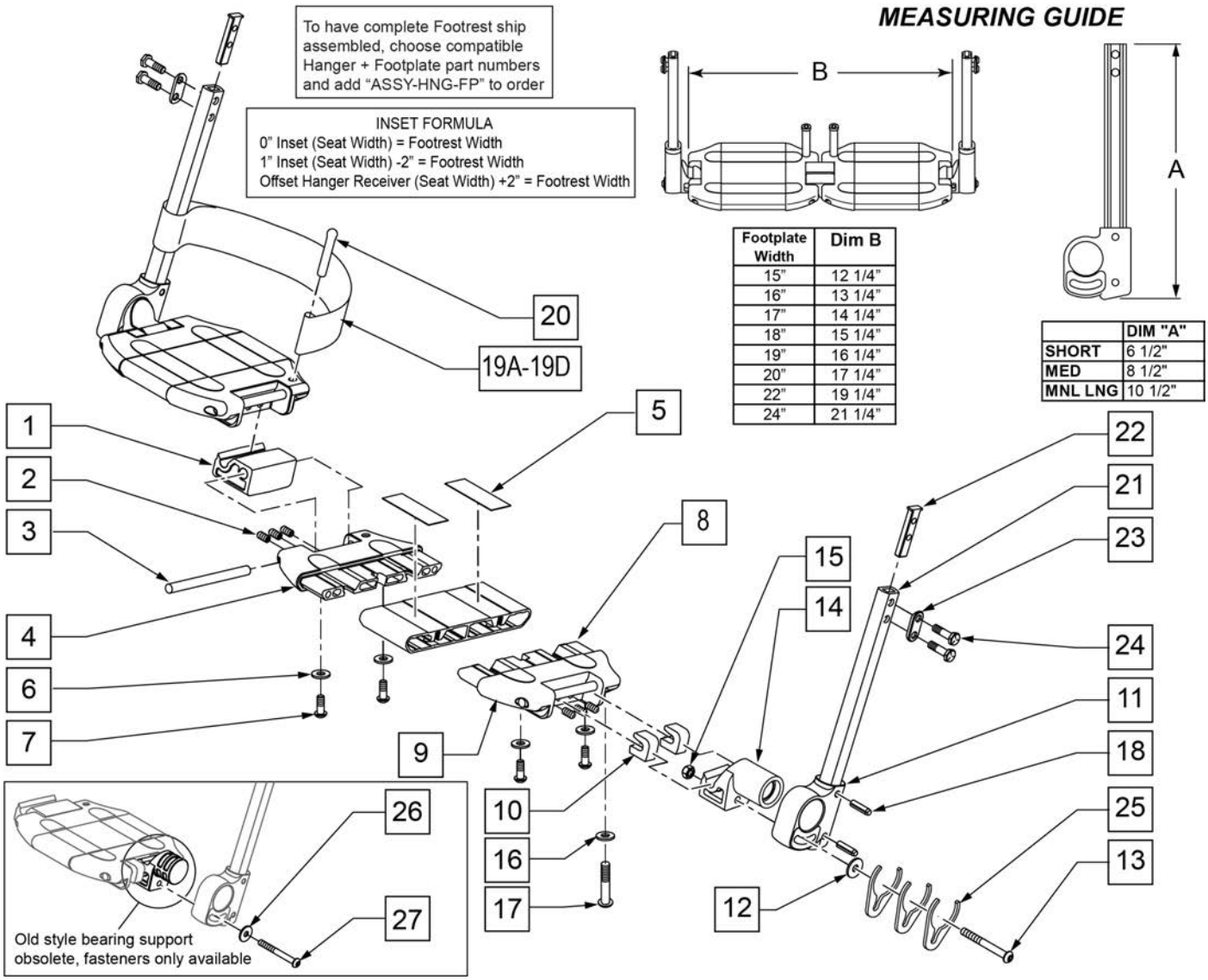

Pos.	Item Number	Description	Remarks
2	230030	M6 x 12 SET SCREW CUP POINT	
3	481283	PIN 8MM x 100 MM	
5	360010	FOOT BOARD SKID TAPE	
6	106943	1/4 AN WASHER FLAT	
7	230032	M6 x 16 B/H CAP SCREW	
9	560019	FOOT BOARD HOLDER R	
9	560020	FOOT BOARD HOLDER L	
10	560021	FOOT BOARD SHIM ALIGNMENT	
11	560024	FOOT YOKE	
12	250070	M6 WASHER	
13	210000	M6 x 55 8.8 BUTTON HD CAP SCRW	
15	200113	NUT HEX NYLOCK M6 X 1 NUT	
16	106944	1/4 AN WASHER FLAT THIN	
17	106958	1/4-20 x 1 HEX C/S	
18	349583	6 x 25MM GROOVED PIN	
19A	741151	HEEL LOOP 14-15 CMPST EA 13.24 44	

Pos.	Item Number	Description	Remarks
19B	741153	HEEL LOOP 18-20 CMPST/14-15 ANG ADJ	
19C	741156	HEEL LOOP 18-20 CMPST	
19D	741253	HEEL LOOP ADLT ADJ F/PLT 18-20	
20	561040	HEEL LOOP PEG	
21A	550831	EXT TBE PLTFRM ONLY SHT	
21B	550832	EXT TBE PLTFRM ONLY MED	
21C	550842	EXT TBE PLTFRM ONLY MNL LNG	
22	500078	INSERT D2 EXT TUBE	
23	483717	HANGER SADDLE	
24	221102	1/4-28 x 3/4 HEX HEAD C/S BLK W/PTCH	
26	250070	M6 WASHER	
27	210000	M6 x 55 8.8 BUTTON HD CAP SCRW	
11,18,21-24	921748	EXT TBE PLTFRM SHT ASSM PCKT	
11,18,21-24	921749	EXT TBE PLTFRM MED ASSM PCKT	
11,18,21-24	900368	EXT TBE PLTFRM MNL LNG PACKET	
1-10,12-16,19,20,25	820620	LOCKING FTPLT 15 W LEFT	
1-10,12-16,19,20,25	820621	LOCKING FTPLT 15 W RIGHT	
1-10,12-16,19,20,25	820622	LOCKING FTPLT 16 W LEFT	
1-10,12-16,19,20,25	820623	LOCKING FTPLT 16 W RIGHT	
1-10,12-16,19,20,25	820624	LOCKING FTPLT 17 W LEFT	
1-10,12-16,19,20,25	820625	LOCKING FTPLT 17 W RIGHT	
1-10,12-16,19,20,25	820626	LOCKING FTPLT 18 W LEFT	
1-10,12-16,19,20,25	820627	LOCKING FTPLT 18 W RIGHT	
1-10,12-16,19,20,25	820628	LOCKING FTPLT 19 W LEFT	
1-10,12-16,19,20,25	820629	LOCKING FTPLT 19 W RIGHT	
1-10,12-16,19,20,25	820630	LOCKING FTPLT 20 W LEFT	
1-10,12-16,19,20,25	820631	LOCKING FTPLT 20 W RIGHT	
1-10,12-16,19,20,25	820632	LOCKING FTPLT 22 W LEFT	
1-10,12-16,19,20,25	820633	LOCKING FTPLT 22 W RIGHT	
1-25	900280	LOCKING FTPLT 15" W/ SHT EXT ASSM	
1-25	900281	LOCKING FTPLT 16" W/ SHT EXT ASSM	
1-25	900282	LOCKING FTPLT 17" W/ SHT EXT ASSM	
1-25	900283	LOCKING FTPLT 18" W/ SHT EXT ASSM	
1-25	900284	LOCKING FTPLT 19" W/ SHT EXT ASSM	
1-25	900285	LOCKING FTPLT 20" W/ SHT EXT ASSM	
1-25	900763	LCKNG FTPLT 21" W/SHT EXT ASSM	
1-25	900763	LOCKING FTPLT 21" W/ SHT EXT ASSM	
1-25	900286	LOCKING FTPLT 22" W/ SHT EXT ASSM	
1-25	900287	LCKNG FTPLT 24" W/SHT EXT ASSM	
1-25	900290	LOCKING FTPLT 15" W/ MED EXT ASSM	
1-25	900291	LOCKING FTPLT 16" W/ MED EXT ASSM	
1-25	900292	LOCKING FTPLT 17" W/ MED EXT ASSM	
1-25	900293	LOCKING FTPLT 18" W/ MED EXT ASSM	
1-25	900294	LOCKING FTPLT 19" W/ MED EXT ASSM	
1-25	900295	LOCKING FTPLT 20" W/ MED EXT ASSM	
1-25	900296	LOCKING FTPLT 22" W/ MED EXT ASSM	
1-25	900762	LOCKING FTPLT 21" W /MED EXT ASSM	
1-25	900297	LCKNG FTPLT 24" W/MED EXT ASSM	
1-25	900360	LOCKING FTPLT 15" W/ MNL LONG EXT	
1-25	900361	LOCKING FTPLT 16" W/ MNL LONG EXT	
1-25	900362	LOCKING FTPLT 17" W/ MNL LONG EXT	
1-25	900363	LOCKING FTPLT 18" W/ MNL LONG EXT	
1-25	900364	LOCKING FTPLT 19" W/ MNL LONG EXT	
1-25	900365	LOCKING FTPLT 20" W/ MNL LONG EXT	
1-25	900366	LOCKING FTPLT 21" W/ MNL LONG EXT	
1-25	900367	LOCKING FTPLT 22" W/ MNL LONG EXT	

Pos.	Item Number	Description	Remarks
		Ship assembled part #	Use with multiple assemblies
	ASSY-HNG-FP	HANGER/FOOTPLATE ASSY REQUIRED	add with Hanger & Footplate kit

PLATFORM FLIP-UP FOOTPLATE

NOTE: * FOR ORDERING INFORMATION, PLEASE SEE "PLATFORM FLIP-UP FOOTREST REFERENCE GUIDE" ATTACHED.

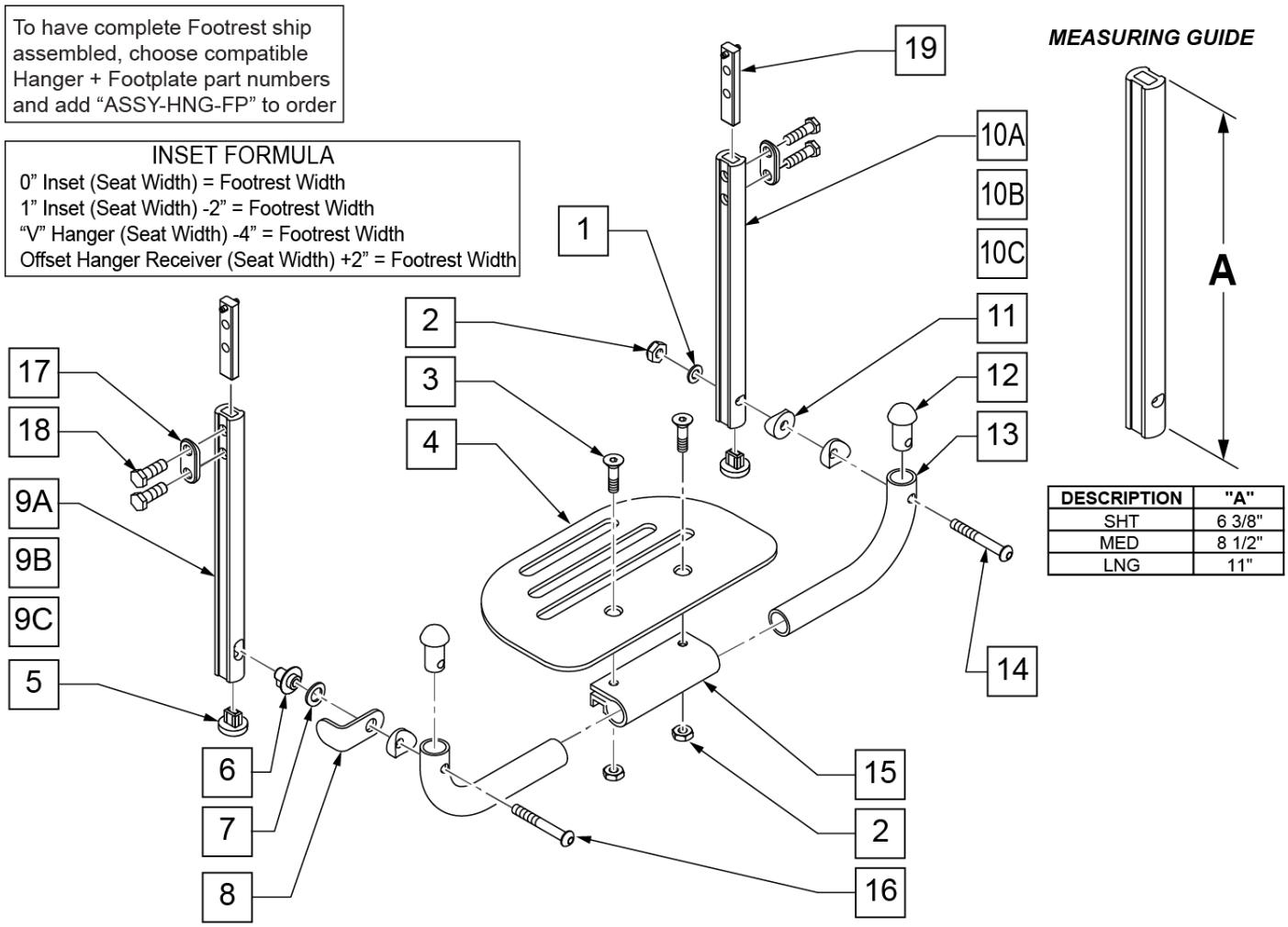

Pos.	Item Number	Description	Remarks
1	106944	1/4 AN WASHER FLAT THIN	
2	106941	1/4-28 AUTOMATION NUT	
3	106978	FHCS 1/4-28 X 7/8 ROHS	
4	500650	PLATFORM F/PLT 6" x 5 1/2"	
4	500651	PLATFORM F/PLT 8 x 5 1/2"	
4	500652	PLATFORM F/PLT 10" x 5 1/2"	
4	500653	PLATFORM F/PLT 12" x 5 1/2"	
4	500654	PLATFORM F/PLT 14" x 5 1/2"	
5	113221	PLUD DOUBLE D EXT TUBE	
6	540410	F/UP FOOTREST KEY STUD D2	
7	262137	3/8 WASHER CURVED	
8	505078	FOOTREST RETAINING BRACKET	
9C	550830	EXT TUBE F/UP KEY ONLY LONG	
9A	550828	EXT TUBE F/UP KEY ONLY SHORT	
9B	550829	EXT TUBE F/UP KEY ONLY MED	
10C	550827	EXT TUBE F/UP SLT ONLY LONG	

Pos.	Item Number	Description	Remarks
10A	550825	EXT TUBE F/UP SLT ONLY SHORT	
10B	550826	EXT TUBE F/UP SLT ONLY MED	
11	561003	3/4" SADDLE THIN	
12	561034	SHORT DOME PLUG	
14	106964	1/4-28 x 2 BH C/S	
15	550351	PLATFORM FOOTPLATE CLAMP	
16	226131	1/4-28 x 1 1/4 BH C/S SHLDR	
17	483717	HANGER SADDLE	
18	221102	1/4-28 x 3/4 HEX C/S	
19	500078	INSERT D2 EXT TUBE	
5,10A, 17-19	921742	EXT TBE F/UP SLT SHT ASSM PCKT	Pivot side
5,10B, 17-19	921743	EXT TBE F/UP SLT MED ASSM PCKT	Pivot side
5,10C, 17-19	921744	EXT TBE F/UP SLT LNG ASSM PCKT	Pivot side
5,9A, 17-19	921745	EXT TBE F/UP KEY SHT ASSM PCKT	Release side
5,9B, 17-19	921746	EXT TBE F/UP KEY MED ASSM PCKT	Release side
5,9C, 17-19	921747	EXT TBE F/UP KEY LNG ASSM PCKT	Release side
5,9A,10A, 17-19	921269	S/A EXT TUBE D2 SHT PLTFRM BLK	Pivot and Release Ext Assm
5,9B,10B, 17-19	921267	S/A EXT TUBE D2 MED PLTFRM BLK	Pivot and Release Ext Assm
5,9C,10C, 17-19	921268	S/A EXT TUBE D2 LNG PLTFRM BLK	Pivot and Release Ext Assm
1-4,6-8, 11-16	900304	PLATFM F/P F/PLT BLK 10" ASSM D2	
1-4,6-8, 11-16	900305	PLATFM F/P F/PLT BLK 11" ASSM D2	
1-4,6-8, 11-16	900306	PLATFM F/P F/PLT BLK 12" ASSM D2	
1-4,6-8, 11-16	900307	PLATFM F/P F/PLT BLK 13" ASSM D2	
1-4,6-8, 11-16	900308	PLATFM F/P F/PLT BLK 14" ASSM D2	
1-4,6-8, 11-16	900309	PLATFM F/P F/PLT BLK 15" ASSM D2	
1-4,6-8, 11-16	900310	PLATFM F/P F/PLT BLK 16" ASSM D2	
1-4,6-8, 11-16	900311	PLATFM F/P F/PLT BLK 17" ASSM D2	
1-4,6-8, 11-16	900312	PLATFM F/P F/PLT BLK 18" ASSM D2	
1-4,6-8, 11-16	900313	PLATFM F/P F/PLT BLK 19" ASSM D2	
1-4,6-8, 11-16	900314	PLATFM F/P F/PLT BLK 20" ASSM D2	
1-4,6-8, 11-16	900315	PLATFM F/P F/PLT BLK 21" ASSM D2	
1-4,6-8, 11-16	900316	PLATFM F/P F/PLT BLK 22" ASSM D2	
		Ship assembled part #	Use with multiple assemblies
	ASSY-HNG-FP	HANGER/FOOTPLATE ASSY REQUIRED	add with Hanger & Footplate kit

DOUBLE D FOOTREST EXTENSION TUBE "OLD STYLE"

NOTE: DISCONTINUED - PARTS ONLY ON GP SWNG-AWAY BEGINNING 4/4/15 & S/N GP-95902, KIDS Q2 SE BEGINNING 4/16/15 & S/N QKE-003425, LX BEGINNING 10/24/2008 & S/N LX-034330, LXI BEGINNING 4/25/15 & S/N LXI-060868, QTS BEGINNING 5/15/15 & S/N QT-044951, QTS SE BEGINNING 5/15/15 & S/N QTE-002092

NOTE: IF REPLACING AN EXTENSION TUBE ON AN MANUAL ALR PLEASE REFER TO THE ROUND EXT TUBE PARTS MANUAL PAGE.

NOTE: WHEN ORDERING REPLACEMENT EXTENSION TUBES PLEASE VERIFY IF YOU HAVE THE OLD STYLE DOUBLE D EXTENSION TUBE OR THE NEW STYLE DOUBLE D EXTENSION TUBE. THIS CAN BE DONE BY REVIEWING THE HANGER THE EXTENSION TUBE IS USED ON. IF THE HANGER UTILIZES A SINGLE SET SCREW AT THE BOTTOM OF THE HANGER TUBE TO ATTACH THE EXTENSION TUBE TO THE HANGER, THEN THIS UTILIZES THE NEW STYLE DOUBLE D EXT TUBE. ALL OTHER HANGERS REQUIRING A DOUBLE D EXTENSION TUBE UTILIZE THE OLD STYLE.

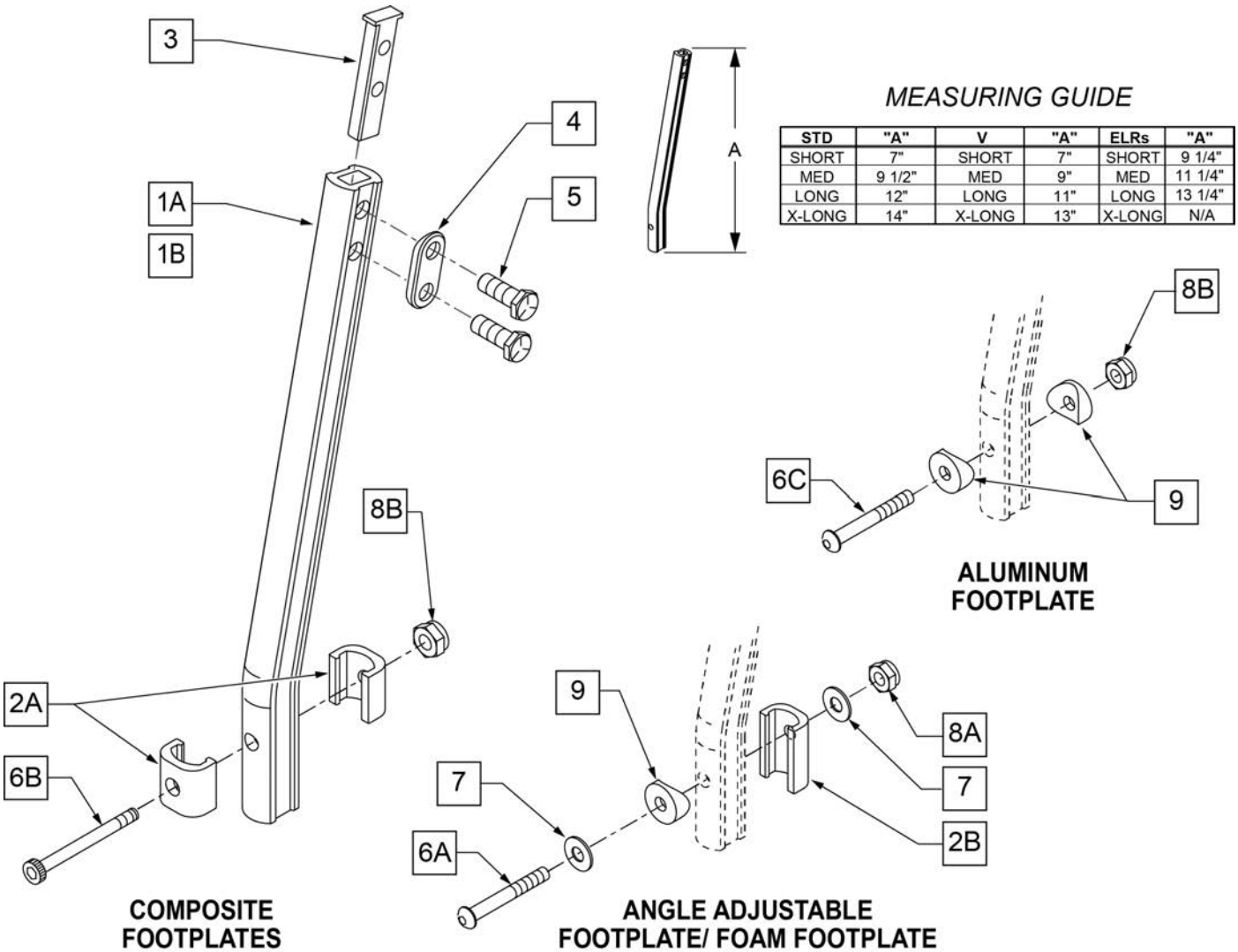

MEASURING GUIDE

STD	"A"	V	"A"	ELRs	"A"
SHORT	7"	SHORT	7"	SHORT	9 1/4"
MED	9 1/2"	MED	9"	MED	11 1/4"
LONG	12"	LONG	11"	LONG	13 1/4"
X-LONG	14"	X-LONG	13"	X-LONG	N/A

Pos.	Item Number	Description	Remarks
1A	550819	EXT TUBE S/A ONLY SHT	Short Ext-Swing Away Hanger

Pos.	Item Number	Description	Remarks
1A	550820	EXT TUBE S/A ONLY MED	Med Ext-Swing Away Hanger
1A	550821	EXT TUBE S/A ONLY LONG	Long Ext-Swing Away Hanger
1A	550822	EXT TUBE S/A ONLY X-LONG	X-Long Ext-Swing Away Hanger
1B	550834	EXT TUBE V IN ONLY D2 SHT R	Right Short Ext-Swing Away Hanger
1B	550835	EXT TUBE V IN ONLY D2 SHT L	Left Short Ext-Swing Away Hanger
1B	550836	EXT TUBE V IN ONLY D2 MED R	Right Med Ext-Swing Away Hanger
1B	550837	EXT TUBE V IN ONLY D2 MED L	Left Med Ext-Swing Away Hanger
1B	550838	EXT TUBE V IN ONLY D2 LONG R	Right Long Ext-Swing Away Hanger
1B	550839	EXT TUBE V IN ONLY D2 LONG L	Left Long Ext-Swing Away Hanger
1B	550840	EXT TUBE V IN ONLY D2 X-LONG R	Right X-Long Ext-Swing Away Hanger
1B	550841	EXT TUBE V IN ONLY D2 X-LONG L	Left X-Long Ext-Swing Away Hanger
2A	483718	HANGER EXTENSION SADDLE	USE W/ COMPOSITE FTPLT
2B	483720	HANGER EXTENSION SADDLE LONG	USE W/ ANGLE ADJ FTPLT
3	500078	INSERT D2 EXT TUBE	
4	483717	HANGER SADDLE	
5	221102	1/4-28 x 3/4 HEX HEAD C/S BLK W/PTCH	
6A	106962	1/4-28 x 1 3/4 BH C/S BLK ZN	USE W/ ANGLE ADJ FTPLT
6B	226165	1/4 -28 x 2 1/2 SOC C/S	USE W/ COMPOSITE FTPLT
6C	226147	1/4 -28 X 1.85 BH C/S	
7	106945	1/4" SAE WASHER	
8A	106941	1/4 -28 AUTOMATION NUT	USE W/ ANGLE ADJ FTPLT
8B	106935	1/4 -28 NYLOCK NUT THIN	USE W/ COMPOSITE FTPLT
9	561055	3/4 SADDLE 1" OD	USE W/ ANGLE ADJ FTPLT
1A,2A-5	921759	EXT TUBE S/A SHT ASSM PCKT	USE W/ COMPOSITE FTPLT
1A,2A-5	921760	EXT TUBE S/A MED ASSM PCKT	USE W/ COMPOSITE FTPLT
1A,2A-5	921761	EXT TUBE S/A LONG ASSM PCKT	USE W/ COMPOSITE FTPLT
1A,2A-5	921762	EXT TUBE S/A X-LONG ASSM PCKT	USE W/ COMPOSITE FTPLT
1B,2A-5	921751	EXT TUBE "V" D2 SHT R ASSM PCKT	RIGHT - USE W/ COMPOSITE FTPLT V HANGER
1B,2A-5	921752	EXT TUBE "V" D2 SHT L ASSM PCKT	LEFT - USE W/ COMPOSITE FTPLT V HANGER
1B,2A-5	921753	EXT TUBE "V" D2 MED R ASSM PCKT	RIGHT - USE W/ COMPOSITE FTPLT V HANGER
1B,2A-5	921754	EXT TUBE "V" D2 MED L ASSM PCKT	LEFT - USE W/ COMPOSITE FTPLT V HANGER
1B,2A-5	921755	EXT TUBE "V" D2 LONG R ASSM PCKT	RIGHT - USE W/ COMPOSITE FTPLT V HANGER
1B,2A-5	921756	EXT TUBE "V" D2 LONG L ASSM PCKT	LEFT - USE W/ COMPOSITE FTPLT V HANGER
1B,2A-5	921757	EXT TUBE "V" D2 X-LONG R ASSM PCKT	RIGHT - USE W/ COMPOSITE FTPLT V HANGER
1B,2A-5	921758	EXT TUBE "V" D2 X-LONG L ASSM PCKT	LEFT - USE W/ COMPOSITE FTPLT V HANGER
1A,2A-7,9	921772	EXT TUBE S/A SHT ANG ADJ PCKT	USE W/ ANGLE ADJ FTPLT
1A,2A-7,9	921773	EXT TUBE S/A MED ANG ADJ PCKT	USE W/ ANGLE ADJ FTPLT
1A,2A-7,9	921774	EXT TUBE S/A LONG ANG ADJ PCKT	USE W/ ANGLE ADJ FTPLT
1A,2A-7,9	921775	EXT TUBE S/A X-LONG ANG ADJ PCKT	USE W/ ANGLE ADJ FTPLT
1B,2A-7,9	921764	EXT TUBE "V" D2 SHT R ANG ADJ PCKT	RIGHT - USE W/ ANGLE ADJ FTPLT V HANGER
1B,2A-7,9	921765	EXT TUBE "V" D2 SHT L ANG ADJ PCKT	LEFT - USE W/ ANGLE ADJ FTPLT V HANGER
1B,2A-7,9	921766	EXT TUBE "V" D2 MED R ANG ADJ PCKT	RIGHT - USE W/ ANGLE ADJ FTPLT V HANGER
1B,2A-7,9	921767	EXT TUBE "V" D2 MED L ANG ADJ PCKT	LEFT - USE W/ ANGLE ADJ FTPLT V HANGER
1B,2A-7,9	921768	EXT TUBE "V" D2 LONG R ANG ADJ PCKT	RIGHT - USE W/ ANGLE ADJ FTPLT V HANGER
1B,2A-7,9	921769	EXT TUBE "V" D2 LONG L ANG ADJ PCKT	LEFT - USE W/ ANGLE ADJ FTPLT V HANGER
1B,2A-7,9	921770	EXT TUBE "V" D2 X-LONG R ANG AD PCKT	RIGHT - USE W/ ANGLE ADJ FTPLT V HANGER
1B,2A-7,9	921771	EXT TUBE "V" D2 X-LONG L ANG AD PCKT	LEFT - USE W/ ANGLE ADJ FTPLT V HANGER

60 DEG HANGER SWING IN-OUT

Note: Effective on GP SA beginning GP-95902, Kids Q2 SE beginning QKE-003425, LX/LXI beginning LXI-060868, Quickie TS beginning QT-044951 & QTE-002092.

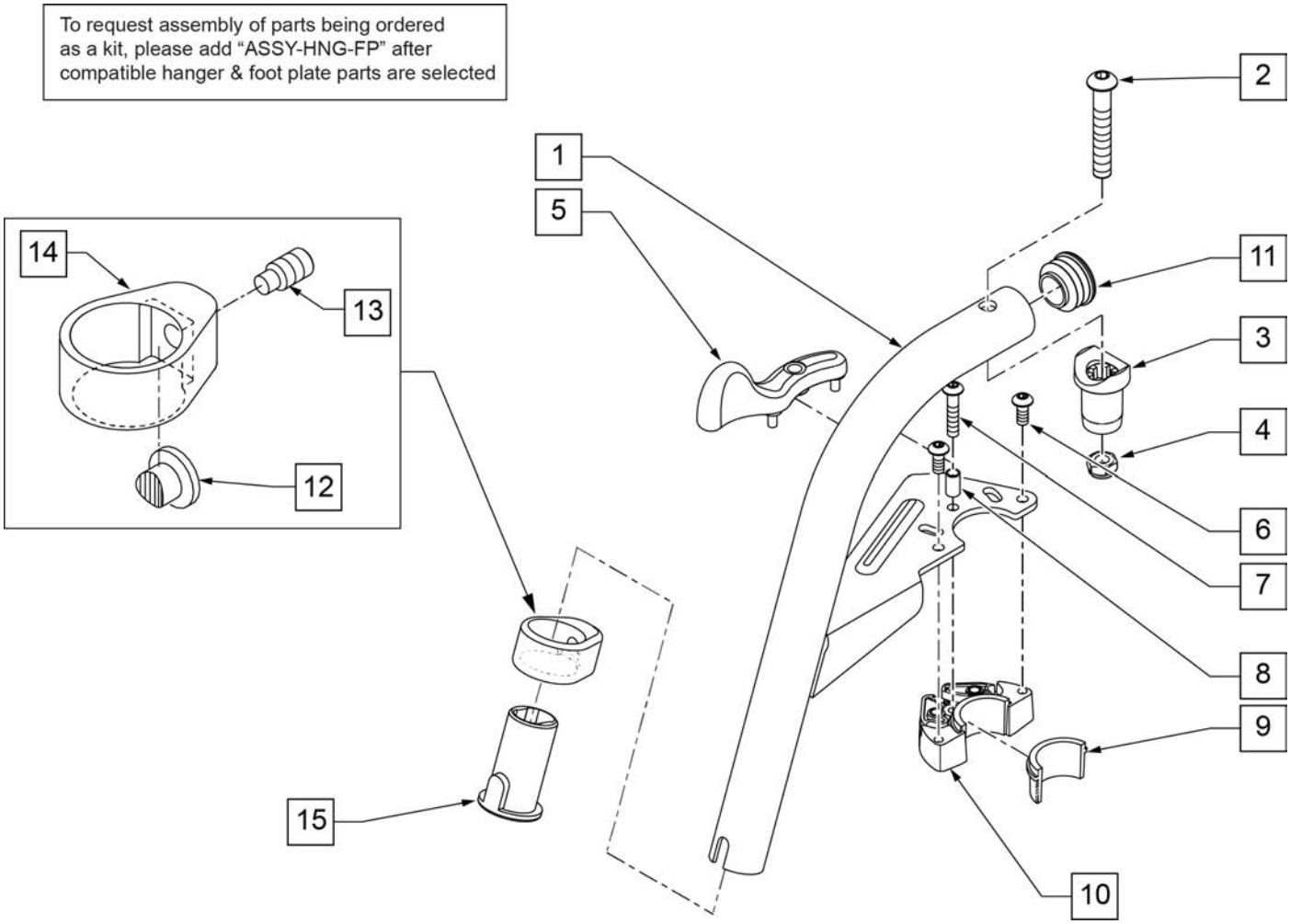

Pos.	Item Number	Description	Remarks
2	106983	5/16-18 X 2 BH C/S SHT THREAD	
3,4	561197	PIVOT SADDLE PLASTIC	
5	052296	SWING I/O LATCH LEVER RIGHT	Right
5	052297	SWING I/O LATCH LEVER LEFT	Left
6	102259-001	BHCS M5 X .8 X 12 W/PL INORG	
7	230494	M5-30 BTTN HD SOC C/S BLK	
8	052054	BUSHING PIVOT HANGER SWING I/O	
11	561062	1" INSERT PLUG .065 RIBS	
15	104160	BUSHING FOOTREST	
1-15	111243S	HANGER 60 Deg S/A ASSM R	SPECIFY COLOR,RIGHT
1-15	111242S	HANGER 60 Deg S/A ASSM L	SPECIFY COLOR,LEFT
12-15	107485	FOOTREST CLAMP ASSM	
6,9,10	120976	ASSY LATCH BLOCK ANTI LIFT	
		Ship assembled part #	Use with multiple assemblies
	ASSY-HNG-FP	HANGER/FOOTPLATE ASSY REQUIRED	add with Hanger & Footplate kit

70 DEG HANGER SWING IN-OUT [07/2010]

Note: Effective on GP SA beginning GP-95902, Kids Q2 SE beginning QKE-003425, LX/LXI beginning LXI-060868, Quickie TS beginning QT-044951 & QTE-002092.

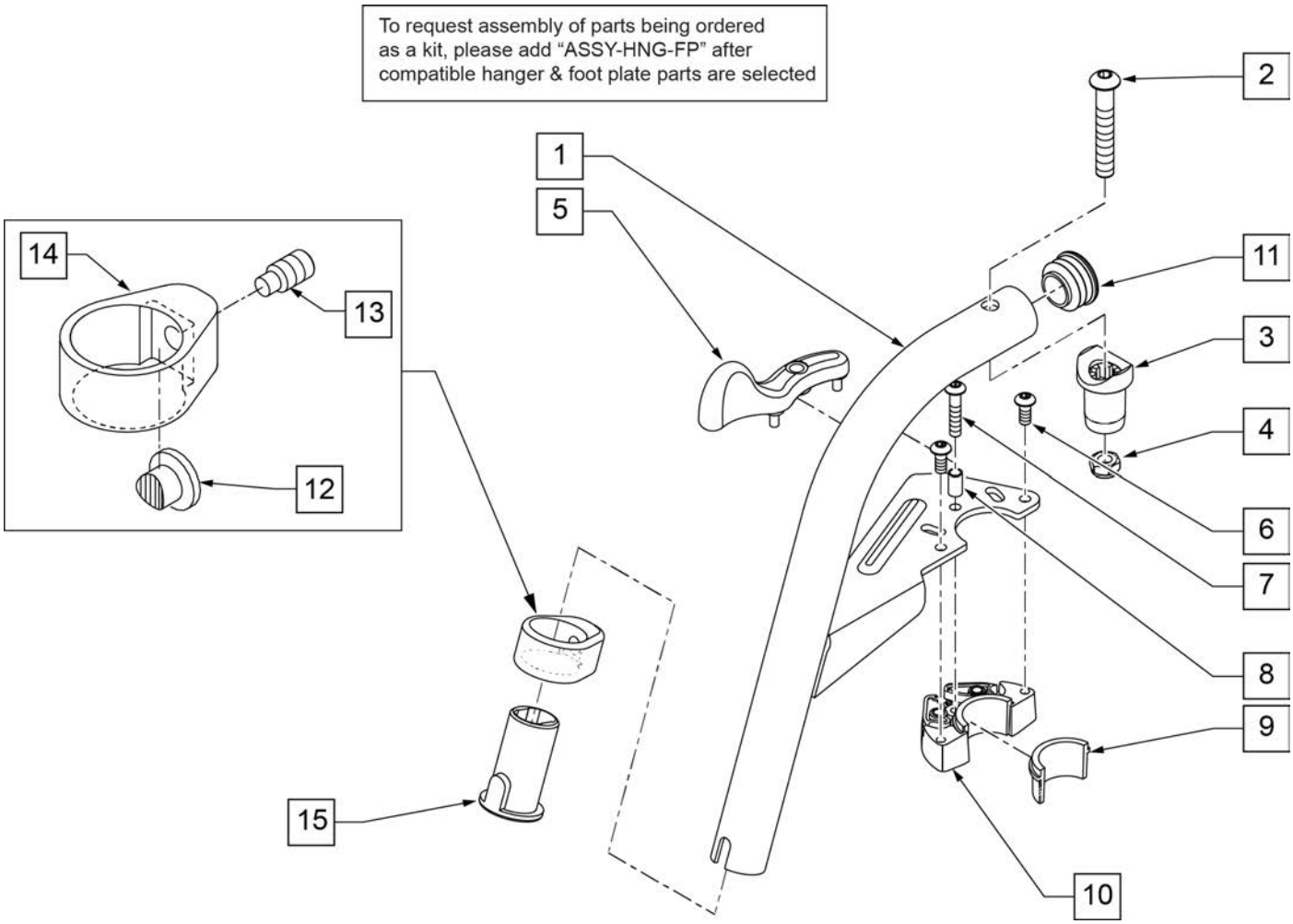

Pos.	Item Number	Description	Remarks
2	106983	5/16-18 X 2 BH C/S SHT THREAD	
3,4	561197	PIVOT SADDLE PLASTIC	
5	052296	SWING I/O LATCH LEVER RIGHT	Right
5	052297	SWING I/O LATCH LEVER LEFT	Left
6	102259-001	BHCS M5 X .8 X 12 W/PL INORG	
7	230494	M5-30 BTTN HD SOC C/S BLK	
8	052054	BUSHING PIVOT HANGER SWING I/O	
11	561062	1" INSERT PLUG .065 RIBS	
15	104160	BUSHING FOOTREST	
1-15	107671S	70 DEG SWING IN/OUT HANGER ASSEMBLY LEFT	SPECIFY COLOR,LEFT
1-15	107670S	70 DEG SWING IN/OUT HANGER ASSEMBLY RIGHT	SPECIFY COLOR,RIGHT
12-15	107485	FOOTREST CLAMP ASSM	
6,9,10	120976	ASSY LATCH BLOCK ANTI LIFT	
		Ship assembled part #	Use with multiple assemblies
	ASSY-HNG-FP	HANGER/FOOTPLATE ASSY REQUIRED	add with Hanger & Footplate kit

80 DEG HANGER SWING IN-OUT

Note: Effective on GP SA beginning GP-95902, Kids Q2 SE beginning QKE-003425, LX/LXI beginning LXI-060868, Quickie TS beginning QT-044951 & QTE-002092.

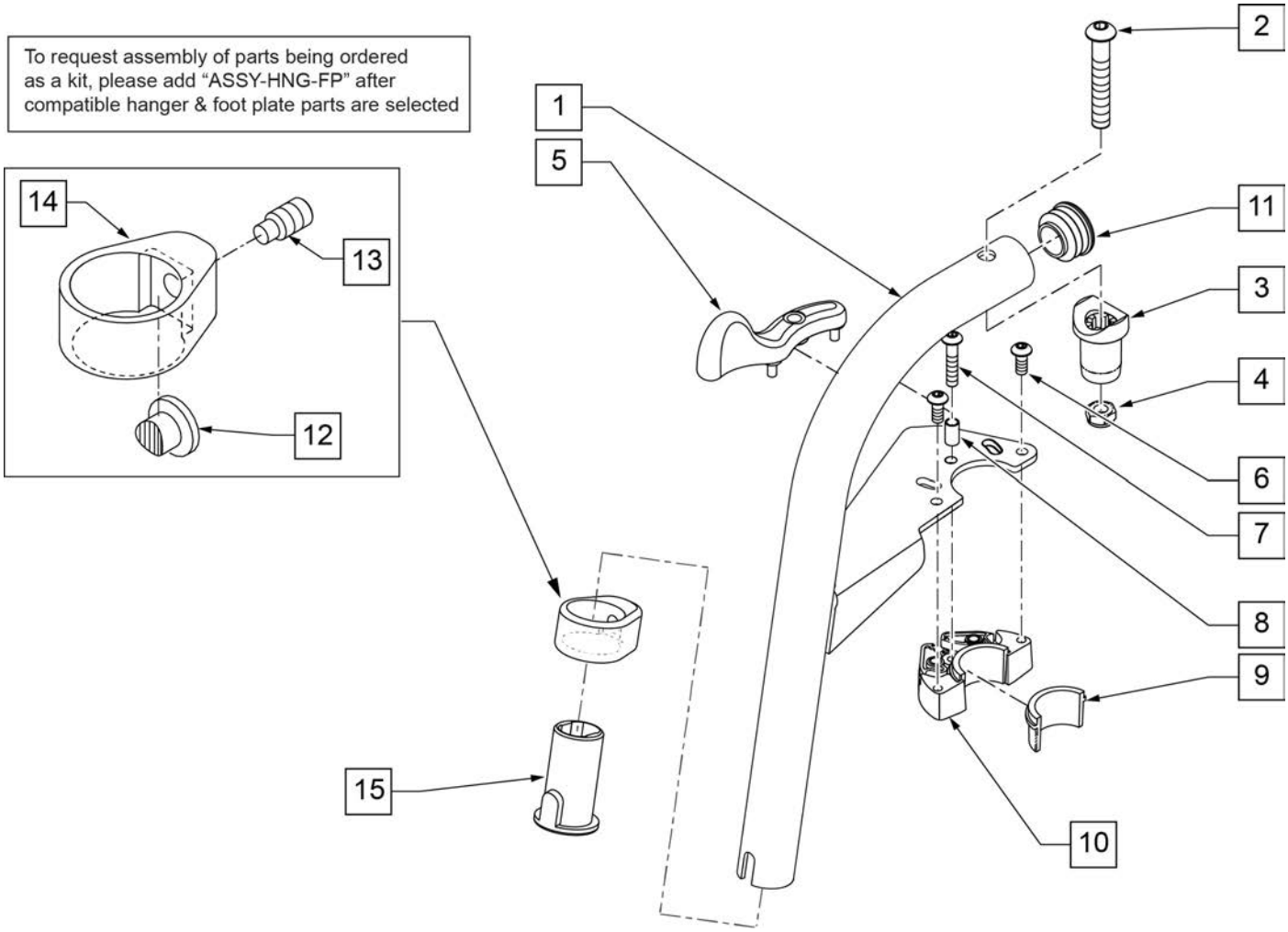

Pos.	Item Number	Description	Remarks
2	106983	5/16-18 X 2 BH C/S SHT THREAD	
3,4	561197	PIVOT SADDLE PLASTIC	
5	052296	SWING I/O LATCH LEVER RIGHT	Right
5	052297	SWING I/O LATCH LEVER LEFT	Left
6	102259-001	BHCS M5 X .8 X 12 W/PL INORG	
7	230494	M5-30 BTTN HD SOC C/S BLK	
8	052054	BUSHING PIVOT HANGER SWING I/O	
11	561062	1" INSERT PLUG .065 RIBS	
15	104160	BUSHING FOOTREST	
1-15	107673S	80 DEG HNGR SWING I/O L	SPECIFY COLOR,LEFT
1-15	107672S	80 DEG HNGR SWING I/O R	SPECIFY COLOR,RIGHT
12-15	107485	FOOTREST CLAMP ASSM	
6,9,10	120976	ASSY LATCH BLOCK ANTI LIFT	
		Ship assembled part #	Use with multiple assemblies
	ASSY-HNG-FP	HANGER/FOOTPLATE ASSY REQUIRED	add with Hanger & Footplate kit

COMPOSITE FOOTPLATE

Note: Footplate Assemblies are set to footrest width; please see "Footplate Formula" table for seat width conversion.

Note: V Style Hangers are not available on Swing Away Style chairs effective 7/14/14; see the "Prior To" ordering guide for V Style footplate assemblies.

Note: for QX Series or SR45 footplate replacement parts see the ordering guide marked specifically for these two models in the informations panel.

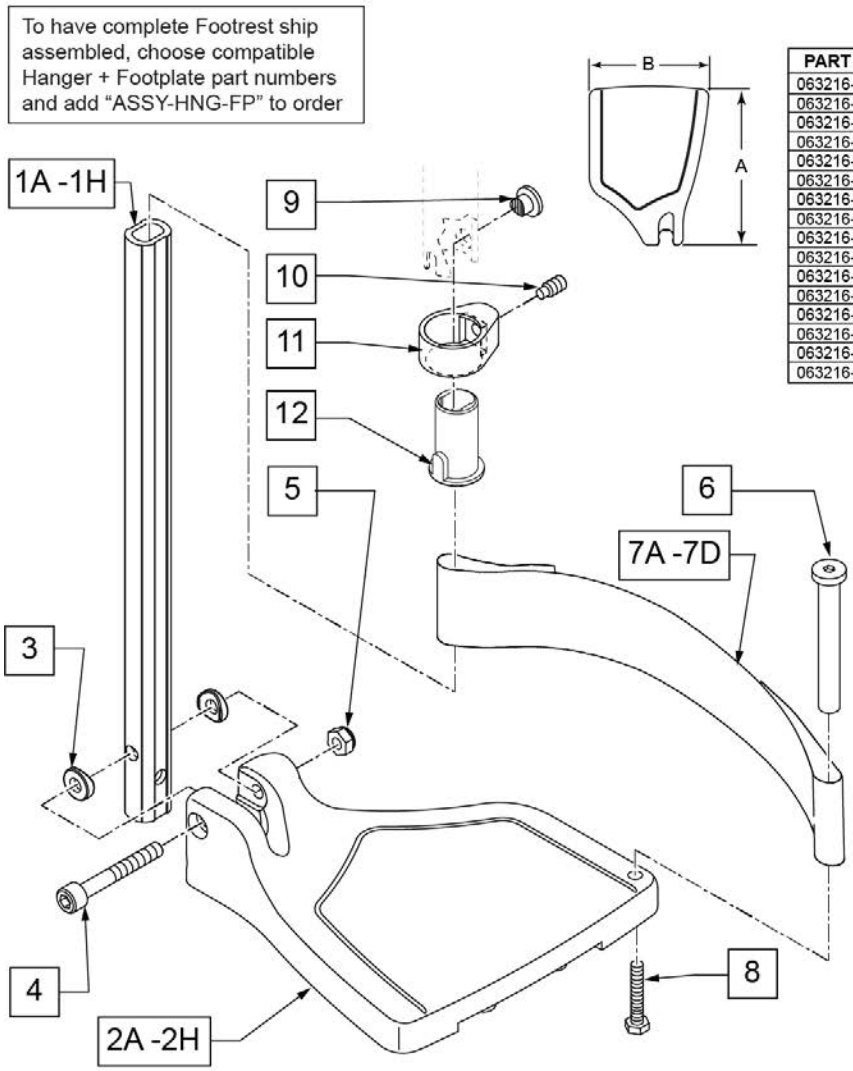

FOOTPLATE MEASURING GUIDE

PART NO	DESCRIPTION	"A"	"B"
063216-006	FOOTPLATE COMPOSITE 157 R (13"W)	6 1/8"	6"
063216-012	FOOTPLATE COMPOSITE 157 L (13"W)	6 1/8"	6"
063216-015	FOOTPLATE COMPOSITE 170 R (14"W)	6 5/8"	6"
063216-018	FOOTPLATE COMPOSITE 170 L (14"W)	6 5/8"	6"
063216-005	FOOTPLATE COMPOSITE 182 R (15"W)	7 1/8"	6"
063216-011	FOOTPLATE COMPOSITE 182 L (15"W)	7 1/8"	6"
063216-014	FOOTPLATE COMPOSITE 195 R (16"W)	7 5/8"	6"
063216-017	FOOTPLATE COMPOSITE 195 L (16"W)	7 5/8"	6"
063216-004	FOOTPLATE COMPOSITE 207 R (17"W)	8 1/8"	6"
063216-010	FOOTPLATE COMPOSITE 207 L (17"W)	8 1/8"	6"
063216-013	FOOTPLATE COMPOSITE 220 R (18"W)	8 5/8"	6 1/4"
063216-016	FOOTPLATE COMPOSITE 220 L (18"W)	8 5/8"	6 1/4"
063216-003	FOOTPLATE COMPOSITE 232 R (19-20"W)	9 1/8"	6 1/4"
063216-009	FOOTPLATE COMPOSITE 232 L (19-20"W)	9 1/8"	6 1/4"
063216-002	FOOTPLATE COMPOSITE 257 R (21-22"W)	10 1/8"	6 1/4"
063216-008	FOOTPLATE COMPOSITE 257 L (21-22"W)	10 1/8"	6 1/4"

INSET FORMULA
0" Inset (Seat Width) = Footrest Width
1" Inset (Seat Width) -2" = Footrest Width
"V" Hanger (Seat Width) -4" = Footrest Width
Offset Hanger Receiver (Seat Width) +2" = Footrest Width

Pos.	Item Number	Description	Remarks
1A,3-5	120660	SHT STRT EXT COMP HDWR	80 deg hangers + ELR only
1B,3-5	120661	MED STRT EXT COMP HDWR	80 deg hangers + ELR only
1C,3-5	120662	LNG STRT EXT COMP HDWR	80 deg hangers + ELR only
1D,3-5	120663	SHT BNT EXT COMP HDWR	60,70,70 Hemi Hangers
1E,3-5	120664	MED BNT EXT COMP HDWR	60,70,70 Hemi Hangers

Pos.	Item Number	Description	Remarks
1F,3-5	120665	LNG BNT EXT COMP HDWR	60,70,70 Hemi Hangers
1G,3-5	120666	SHT V EXT R COMP HDWR	70 deg V hangers only-LEFT
1G,3-5	120667	SHT V EXT L COMP HDWR	70 deg V hangers only-RIGHT
1H,3-5	120668	LNG V EXT R COMP HDWR	70 deg V hangers only-LEFT
1H,3-5	120669	LNG V EXT L COMP HDWR	70 deg V hangers only-RIGHT
2A	063216-006	FOOTPLATE COMPOSITE 157 R	RIGHT 13" Footrest Width
2A	063216-012	FOOTPLATE COMPOSITE 157 L	LEFT 13" Footrest Width
2B	063216-015	FOOTPLATE COMPOSITE 170 R	RIGHT 14" Footrest Width
2B	063216-018	FOOTPLATE COMPOSITE 170 L	LEFT 14" Footrest Width
2C	063216-005	COMPOSITE FOOTPLATE 182 R	RIGHT 15" Footrest Width
2C	063216-011	COMPOSITE FOOTPLATE 182 L	LEFT 15" Footrest Width
2D	063216-014	FOOTPLATE COMPOSITE 195 R	RIGHT 16" Footrest Width
2D	063216-017	FOOTPLATE COMPOSITE 195 L	LEFT 16" Footrest Width
2E	063216-004	COMPOSITE FOOTPLATE 207 R	RIGHT 17" Footrest Width
2E	063216-010	COMPOSITE FOOTPLATE 207 L	LEFT 17" Footrest Width
2F	063216-013	FOOTPLATE COMPOSITE 220 R	RIGHT 18" Footrest Width
2F	063216-016	FOOTPLATE COMPOSITE 220 L	LEFT 18" Footrest Width
2G	063216-003	COMPOSITE FOOTPLATE 232 R	RIGHT 19" & 20" Footrest Width
2G	063216-009	COMPOSITE FOOTPLATE 232 L	LEFT 19" & 20" Footrest Width
2H	063216-002	FOOTPLATE COMPOSITE 257 R	RIGHT 21" & 22" Footrest Width
2H	063216-008	FOOTPLATE COMPOSITE 257 L	LEFT 21" & 22" Footrest Width
3	104377	3/4" SADDLE THIN	
4	103175	SHCS M6 X 1 X 40 INORG	
5	132626	NUT AUTOMATION M6 X 1.0	Inserted in bottom of footplate.
6	104328	HEEL LOOP PEG	
7A	104380-001	ADJUSTABLE FOOT REST STRAP	14" wide
7B	104380-002	ADJUSTABLE FOOT REST STRAP	15-16" wide
7C	104380-003	ADJUSTABLE FOOT REST STRAP	17-18" wide
7D	104380-004	ADJUSTABLE FOOT REST STRAP	19-22" wide
8	102268-001	HHCS M6 X 1 X 25	
12	104160	BUSHING FOOTREST	
9-12	107485	FOOTREST CLAMP ASSM	
		Ship assembled part #	Use with multiple assemblies
	ASSY-HNG-FP	HANGER/FOOTPLATE ASSY REQUIRED	add with Hanger & Footplate kit
>>>>		60°,70°,70° HEMI HANGERS - SHORT EXT - RIGHT	
1D,2A,3-6,7A,8	107746	COMP BNT SHT EXT ASM 13" W R	Right- 70D- 13" W- SHORT
1D,2B,3-6,7A,8	107747	COMP BNT SHT EXT ASM 14" W R	Right- 70D- 14" W- SHORT
1D,2C,3-6,7B,8	107748	COMP BNT SHT EXT ASM 15" W R	Right- 70D- 15" W- SHORT
1D,2D,3-6,7B,8	107749	COMP BNT SHT EXT ASM 16" W R	Right- 70D- 16" W- SHORT
1D,2E,3-6,7C,8	107750	COMP BNT SHT EXT ASM 17" W R	Right- 70D- 17" W- SHORT
1D,2F,3-6,7C,8	107751	COMP BNT SHT EXT ASM 18" W R	Right- 70D- 18" W- SHORT
1D,2G,3-6,7D,8	107752	COMP BNT SHT EXT ASM 19 & 20"W R	Right- 70D- 19 & 20" W- SHORT
1D,2H,3-6,7D,8	111528	COMP BNT SHT EXT ASM 21 & 22"W R	Right- 70D- 21 & 22" W- SHORT
>>>>		60°,70°,70° HEMI HANGERS - SHORT EXT - LEFT	
1D,2A,3-6,7A,8	107753	COMP BNT SHT EXT ASM 13" W L	Left- 70D- 13 W- SHORT
1D,2B,3-6,7A,8	107754	COMP BNT SHT EXT ASM 14" W L	Left- 70D- 14 W- SHORT
1D,2C,3-6,7B,8	107755	COMP BNT SHT EXT ASM 15" W L	Left- 70D- 15 W- SHORT
1D,2D,3-6,7B,8	107756	COMP BNT SHT EXT ASM 16" W L	Left- 70D- 16 W- SHORT
1D,2E,3-6,7C,8	107757	COMP BNT SHT EXT ASM 17" W L	Left- 70D- 17 W- SHORT
1D,2F,3-6,7C,8	107758	COMP BNT SHT EXT ASM 18" W L	Left- 70D- 18 W- SHORT
1D,2G,3-6,7D,8	107759	COMP BNT SHT EXT ASM 19 & 20"W L	Left- 70D- 19 & 20" W- SHORT
1D,2H,3-6,7D,8	111529	COMP BNT SHT EXT ASM 21 & 22"W L	Left- 70D- 21 & 22" W- SHORT
>>>>		60°,70°,70° HEMI HANGERS - MED EXT - RIGHT	
1E,2A,3-6,7A,8	107760	COMP BNT MED EXT ASM 13" W R	Right- 70D- 13" W- MED
1E,2B,3-6,7A,8	107761	COMP BNT MED EXT ASM 14" W R	Right- 70D- 14" W- MED
1E,2C,3-6,7B,8	107762	COMP BNT MED EXT ASM 15" W R	Right- 70D- 15" W- MED

Pos.	Item Number	Description	Remarks
1E,2D,3-6,7B,8	107763	COMP BNT MED EXT ASM 16" W R	Right- 70D- 16" W- MED
1E,2E,3-6,7C,8	107764	COMP BNT MED EXT ASM 17" W R	Right- 70D- 17" W- MED
1E,2F,3-6,7C,8	107765	COMP BNT MED EXT ASM 18" W R	Right- 70D- 18" W- MED
1E,2G,3-6,7D,8	107766	COMP BNT MED EXT ASM 19 & 20"W R	Right- 70D- 19 & 20" W- MED
1E,2H,3-6,7D,8	111530	COMP BNT MED EXT ASM 21 & 22"W R	Right- 70D- 21 & 22" W- MED
>>>>		60°,70°,70° HEMI HANGERS - MED EXT - LEFT	
1E,2A,3-6,7A,8	107767	COMP BNT MED EXT ASM 13" W L	Left- 70D- 13 W- MED
1E,2B,3-6,7A,8	107768	COMP BNT MED EXT ASM 14" W L	Left- 70D- 14 W- MED
1E,2C,3-6,7B,8	107769	COMP BNT MED EXT ASM 15" W L	Left- 70D- 15 W- MED
1E,2D,3-6,7B,8	107770	COMP BNT MED EXT ASM 16" W L	Left- 70D- 16 W- MED
1E,2E,3-6,7C,8	107771	COMP BNT MED EXT ASM 17" W L	Left- 70D- 17 W- MED
1E,2F,3-6,7C,8	107772	COMP BNT MED EXT ASM 18" W L	Left- 70D- 18 W- MED
1E,2G,3-6,7D,8	107773	COMP BNT MED EXT ASM 19 & 20"W L	Left- 70D- 19 & 20" W- MED
1E,2H,3-6,7D,8	111531	COMP BNT MED EXT ASM 21 & 22"W L	Left- 70D- 21 & 22" W- MED
>>>>		60°,70°,70° HEMI HANGERS - LONG EXT - RIGHT	
1F,2A,3-6,7A,8	107774	COMP BNT LONG EXT ASM 13" W R	Right- 70D- 13" W- LONG
1F,2B,3-6,7A,8	107775	COMP BNT LONG EXT ASM 14" W R	Right- 70D- 14" W- LONG
1F,2C,3-6,7B,8	107776	COMP BNT LONG EXT ASM 15" W R	Right- 70D- 15" W- LONG
1F,2D,3-6,7B,8	107777	COMP BNT LONG EXT ASM 16" W R	Right- 70D- 16" W- LONG
1F,2E,3-6,7C,8	107778	COMP BNT LONG EXT ASM 17" W R	Right- 70D- 17" W- LONG
1F,2F,3-6,7C,8	107779	COMP BNT LONG EXT ASM 18" W R	Right- 70D- 18" W- LONG
1F,2G,3-6,7D,8	107780	COMP BNT LONG EXT ASM 19 & 20"W R	Right- 70D- 19 & 20" W- LONG
1F,2H,3-6,7D,8	111532	COMP BNT LONG EXT ASM 21 & 22"W R	Right- 70D- 21 & 22" W- LONG
>>>>		60°,70°,70° HEMI HANGERS - LONG EXT - LEFT	
1F,2A,3-6,7A,8	107781	COMP BNT LONG EXT ASM 13" W L	Left- 70D- 13 W- LONG
1F,2B,3-6,7A,8	107782	COMP BNT LONG EXT ASM 14" W L	Left- 70D- 14 W- LONG
1F,2C,3-6,7B,8	107783	COMP BNT LONG EXT ASM 15" W L	Left- 70D- 15 W- LONG
1F,2D,3-6,7B,8	107784	COMP BNT LONG EXT ASM 16" W L	Left- 70D- 16 W- LONG
1F,2E,3-6,7C,8	107785	COMP BNT LONG EXT ASM 17" W L	Left- 70D- 17 W- LONG
1F,2F,3-6,7C,8	107786	COMP BNT LONG EXT ASM 18" W L	Left- 70D- 18 W- LONG
1F,2G,3-6,7D,8	107787	COMP BNT LONG EXT ASM 19 & 20"W L	Left- 70D- 19 & 20" W- LONG
1F,2H,3-6,7D,8	111533	COMP BNT LONG EXT ASM 21 & 22"W L	Left- 70D- 21 & 22" W- LONG
>>>>		70 DEGREE "V" HANGERS - MED EXT - RIGHT	
1G,2A,3-8	107788	COMP V MED EXT ASM 13W R	Right- 70D V hangers only 13 W- MED
1G,2B,3-8	107789	COMP V MED EXT ASM 14W R	Right- 70D V hangers only 14 W- MED
1G,2C,3-8	107790	COMP V MED EXT ASM 15W R	Right- 70D V hangers only 15 W- MED
1G,2D,3-8	107791	COMP V MED EXT ASM 16W R	Right- 70D V hangers only 16 W- MED
1G,2E,3-8	107792	COMP V MED EXT ASM 17W R	Right- 70D V hangers only 17 W- MED
1G,2F,3-8	107793	COMP V MED EXT ASM 18W R	Right- 70D V hangers only 18 W- MED
>>>>		70 DEGREE "V" HANGERS - MED EXT - LEFT	
1G,2A,3-8	107795	COMP V MED EXT ASM 13W L	Left- 70D V hangers only 13 W- MED
1G,2B,3-8	107796	COMP V MED EXT ASM 14W L	Left- 70D V hangers only 14 W- MED
1G,2C,3-8	107797	COMP V MED EXT ASM 15W L	Left- 70D V hangers only 15 W- MED
1G,2D,3-8	107798	COMP V MED EXT ASM 16W L	Left- 70D V hangers only 16 W- MED
1G,2E,3-8	107799	COMP V MED EXT ASM 17W L	Left- 70D V hangers only 17 W- MED
1G,2F,3-8	107800	COMP V MED EXT ASM 18W L	Left- 70D V hangers only 18 W- MED
>>>>		70 DEGREE "V" HANGERS - LONG EXT - RIGHT	
1H,2A,3-8	107802	COMP V LNG EXT ASM 13W R	Right- 70D V hangers only 13 W- LONG
1H,2B,3-8	107803	COMP V LNG EXT ASM 14W R	Right- 70D V hangers only 14 W- LONG
1H,2C,3-8	107804	COMP V LNG EXT ASM 15W R	Right- 70D V hangers only 15 W- LONG
1H,2D,3-8	107805	COMP V LNG EXT ASM 16W R	Right- 70D V hangers only 16 W- LONG
1H,2E,3-8	107806	COMP V LNG EXT ASM 17W R	Right- 70D V hangers only 17 W- LONG
1H,2F,3-8	107807	COMP V LNG EXT ASM 18W R	Right- 70D V hangers only 18 W- LONG
>>>>		70 DEGREE "V" HANGERS - LONG EXT - LEFT	
1H,2A,3-8	107809	COMP V LNG EXT ASM 13W L	Left- 70D V hangers only 13 W- LONG
1H,2B,3-8	107810	COMP V LNG EXT ASM 14W L	Left- 70D V hangers only 14 W- LONG

Pos.	Item Number	Description	Remarks
1H,2C,3-8	107811	COMP V LNG EXT ASM 15W L	Left- 70D V hangers only 15 W- LONG
1H,2D,3-8	107812	COMP V LNG EXT ASM 16W L	Left- 70D V hangers only 16 W- LONG
1H,2E,3-8	107813	COMP V LNG EXT ASM 17W L	Left- 70D V hangers only 17 W- LONG
1H,2F,3-8	107814	COMP V LNG EXT ASM 18W L	Left- 70D V hangers only 18 W- LONG
>>>>		80 DEGREE HANGERS - SHORT EXT - RIGHT	
1A,2A,3-6,7A,8	107704	COMP STRT SHT EXT ASM 13"W R	Right- 80D- 13" W- SHORT
1A,2B,3-6,7A,8	107705	COMP STRT SHT EXT ASM 14"W R	Right- 80D- 14" W- SHORT
1A,2C,3-6,7B,8	107706	COMP STRT SHT EXT ASM 15"W R	Right- 80D- 15" W- SHORT
1A,2D,3-6,7B,8	107707	COMP STRT SHT EXT ASM 16"W R	Right- 80D- 16" W- SHORT
1A,2E,3-6,7C,8	107708	COMP STRT SHT EXT ASM 17"W R	Right- 80D- 17" W- SHORT
1A,2F,3-6,7C,8	107709	COMP STRT SHT EXT ASM 18"W R	Right- 80D- 18" W- SHORT
1A,2G,3-6,7D,8	107710	COMP STRT SHT EXT ASM 19 & 20"W R	Right- 80D- 19 & 20" W- SHORT
1A,2H,3-6,7D,8	111522	COMP STRT SHT EXT ASM 21 & 22"W R	Right- 80D- 21 & 22" W- SHORT
>>>>		80 DEGREE HANGERS - SHORT EXT - LEFT	
1A,2A,3-6,7A,8	107711	COMP STRT SHT EXT ASM 13"W L	LEFT- 80D- 13" W- SHORT
1A,2B,3-6,7A,8	107712	COMP STRT SHT EXT ASM 14"W L	LEFT- 80D- 14" W- SHORT
1A,2C,3-6,7B,8	107713	COMP STRT SHT EXT ASM 15"W L	LEFT- 80D- 15" W- SHORT
1A,2D,3-6,7B,8	107714	COMP STRT SHT EXT ASM 16"W L	LEFT- 80D- 16" W- SHORT
1A,2E,3-6,7C,8	107715	COMP STRT SHT EXT ASM 17"W L	LEFT- 80D- 17" W- SHORT
1A,2F,3-6,7C,8	107716	COMP STRT SHT EXT ASM 18"W L	LEFT- 80D- 18" W- SHORT
1A,2G,3-6,7D,8	107717	COMP STRT SHT EXT ASM 19 & 20"W L	LEFT- 80D- 19 & 20" W- SHORT
1A,2H,3-6,7D,8	111523	COMP STRT SHT EXT ASM 21 & 22"W L	LEFT- 80D- 21 & 22" W- SHORT
>>>>		80 DEGREE HANGERS - MED EXT - RIGHT	
1B,2A,3-6,7A,8	107718	COMP STRT MED EXT ASM 13"W R	Right- 80D- 13" W- MED
1B,2B,3-6,7A,8	107719	COMP STRT MED EXT ASM 14"W R	Right- 80D- 14" W- MED
1B,2C,3-6,7B,8	107720	COMP STRT MED EXT ASM 15"W R	Right- 80D- 15" W- MED
1B,2D,3-6,7B,8	107721	COMP STRT MED EXT ASM 16"W R	Right- 80D- 16" W- MED
1B,2E,3-6,7C,8	107722	COMP STRT MED EXT ASM 17"W R	Right- 80D- 17" W- MED
1B,2F,3-6,7C,8	107723	COMP STRT MED EXT ASM 18"W R	Right- 80D- 18" W- MED
1B,2G,3-6,7D,8	107724	COMP STRT MED EXT ASM 19 & 20"W R	Right- 80D- 19 & 20" W- MED
1B,2H,3-6,7D,8	111524	COMP STRT MED EXT ASM 21 & 22"W R	Right- 80D- 21 & 22" W- MED
>>>>		80 DEGREE HANGERS - MED EXT - LEFT	
1B,2A,3-6,7A,8	107725	COMP STRT MED EXT ASM 13"W L	LEFT- 80D- 13" W- MED
1B,2B,3-6,7A,8	107726	COMP STRT MED EXT ASM 14"W L	LEFT- 80D- 14" W- MED
1B,2C,3-6,7B,8	107727	COMP STRT MED EXT ASM 15"W L	LEFT- 80D- 15" W- MED
1B,2D,3-6,7B,8	107728	COMP STRT MED EXT ASM 16"W L	LEFT- 80D- 16" W- MED
1B,2E,3-6,7C,8	107729	COMP STRT MED EXT ASM 17"W L	LEFT- 80D- 17" W- MED
1B,2F,3-6,7C,8	107730	COMP STRT MED EXT ASM 18"W L	LEFT- 80D- 18" W- MED
1B,2G,3-6,7D,8	107731	COMP STRT MED EXT ASM 19 & 20"W L	LEFT- 80D- 19 & 20" W- MED
1B,2H,3-6,7D,8	111525	COMP STRT MED EXT ASM 21 & 22"W L	LEFT- 80D- 21 & 22" W- MED
>>>>		80 DEGREE HANGERS - LONG EXT - RIGHT	
1C,2A,3-6,7A,8	107732	COMP STRT LONG EXT ASM 13"W R	Right- 80D- 13" W- LONG
1C,2B,3-6,7A,8	107733	COMP STRT LONG EXT ASM 14"W R	Right- 80D- 14" W- LONG
1C,2C,3-6,7B,8	107734	COMP STRT LONG EXT ASM 15"W R	Right- 80D- 15" W- LONG
1C,2D,3-6,7B,8	107735	COMP STRT LONG EXT ASM 16"W R	Right- 80D- 16" W- LONG
1C,2E,3-6,7C,8	107736	COMP STRT LONG EXT ASM 17"W R	Right- 80D- 17" W- LONG
1C,2F,3-6,7C,8	107737	COMP STRT LONG EXT ASM 18"W R	Right- 80D- 18" W- LONG
1C,2G,3-6,7D,8	107738	COMP STRT LONG EXT ASM 19 & 20"W R	Right- 80D- 19 & 20" W- LONG
1C,2H,3-6,7D,8	111526	COMP STRT LONG EXT ASM 21 & 22"W R	Right- 80D- 21 & 22" W- LONG
>>>>		80 DEGREE HANGERS - LONG EXT - LEFT	
1C,2A,3-6,7A,8	107739	COMP STRT LONG EXT ASM 13"W L	LEFT- 80D- 13" W- LONG
1C,2B,3-6,7A,8	107740	COMP STRT LONG EXT ASM 14"W L	LEFT- 80D- 14" W- LONG
1C,2C,3-6,7B,8	107741	COMP STRT LONG EXT ASM 15"W L	LEFT- 80D- 15" W- LONG
1C,2D,3-6,7B,8	107742	COMP STRT LONG EXT ASM 16"W L	LEFT- 80D- 16" W- LONG
1C,2E,3-6,7C,8	107743	COMP STRT LONG EXT ASM 17"W L	LEFT- 80D- 17" W- LONG
1C,2F,3-6,7C,8	107744	COMP STRT LONG EXT ASM 18"W L	LEFT- 80D- 18" W- LONG

Pos.	Item Number	Description	Remarks
1C,2G,3-6,7D,8	107745	COMP STRT LONG EXT ASM 19 & 20"W L	LEFT- 80D- 19 & 20" W- LONG
1C,2H,3-6,7D,8	111527	COMP STRT LONG EXT ASM 21 & 22"W L	LEFT- 80D- 21 & 22" W- LONG

ADULT ANGLE-ADJ FOOTPLATE EXT MOUNT

[02/19/2020]

Note: Footplate Assemblies are set to footrest width; please see "Footplate Formula" table for seat width conversion.

Note: V Style Hangers are not available on Swing Away Style chairs effective 7/14/14; see the "Prior To" ordering guide for V Style footplate assemblies.

Note: for QX Series or SR45 footplate replacement parts see the ordering guide marked specifically for these two models in the informations panel.

To have complete Footrest ship assembled, choose compatible Hanger + Footplate part numbers and add “ASSY-HNG-FP” to order

INSET FORMULA
0” Inset (Seat Width) = Footrest Width
1” Inset (Seat Width) -2” = Footrest Width
“V” Hanger (Seat Width) -4” = Footrest Width
Offset Hanger Receiver (Seat Width) +2” = Footrest Width

MEASURING GUIDE

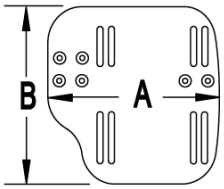

CHAIR WIDTH	“A”	“B”
10” - 11”	3 1/2”	7 1/4”
12” - 13”	4 1/2”	7 3/4”
14” - 15”	5 1/2”	7 3/4”
16” - 17”	6 1/2”	7 3/4”
18” - 20”	7 1/2”	7 3/4”

21 EXT MNT HARDWARE 1 SIDE

ITEM #	ILLUSTRATION	DESCRIPTION	QTY
3		NUT AUTOMATION M6 X 1.0 ROHS	1
4		WASHER FLAT THIN AN 1/4	2
5		HANGER EXTENSION SADDLE	1
6		3/4” SADDLE 1” OD	1
8		WASHER FLAT SAE 1/4 ROHS	1
9		SHCS M6 X 1 X 45 12MM PART THD	1

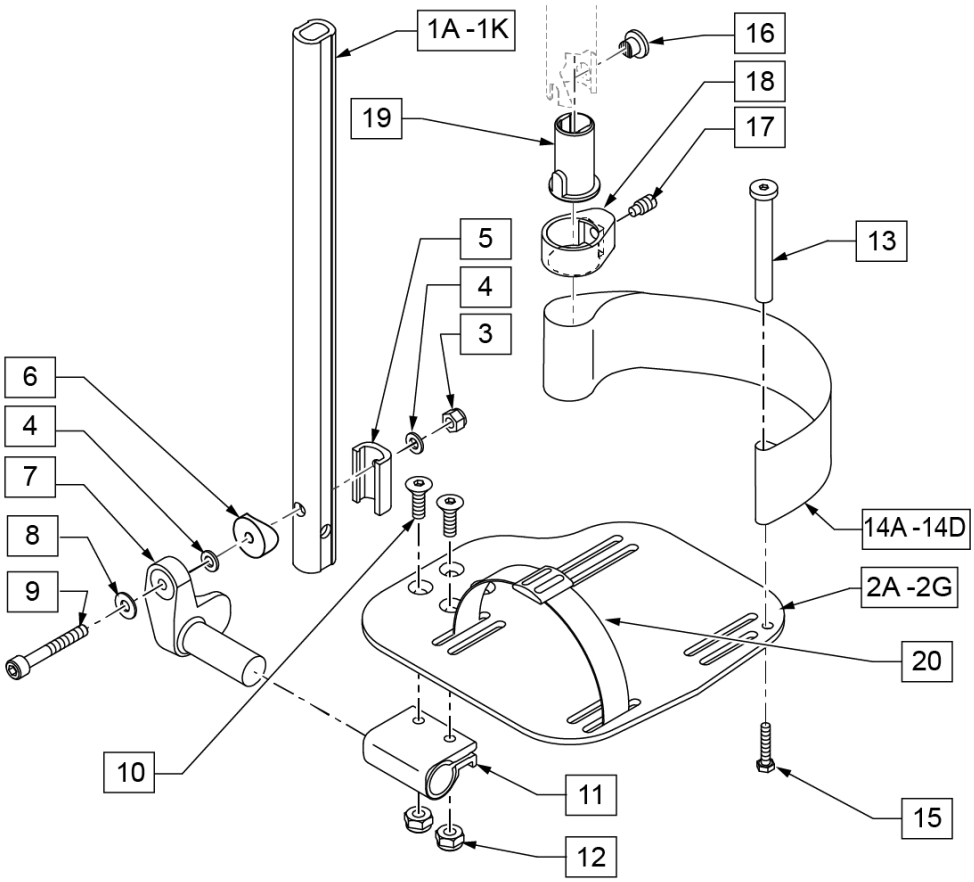

Pos.	Item Number	Description	Remarks
1A,3-6,8,9	120670	SHT STRT EXT AAA HDWR	80 deg Hangers Only
1B,3-6,8,9	120671	MED STRT EXT AAA HDWR	80 deg Hangers Only
1C,3-6,8,9	120672	LNG STRT EXT AAA HDWR	80 deg Hangers Only
1D,3-6,8,9	120673	SHT BNT EXT AAA HDWR	60,70,70 Hemi Hangers
1E,3-6,8,9	120674	MED BNT EXT AAA HDWR	60,70,70 Hemi Hangers

Pos.	Item Number	Description	Remarks
1F,3-6,8,9	120675	LNG BNT EXT AAA HDWR	60,70,70 Hemi Hangers
1G,3-6,8,9	120676	SHT V EXT R AAA HDWR	Left - 70 deg V Hangers Only
1H,3-6,8,9	120677	SHT V EXT L AAA HDWR	Right - 70 deg V Hangers Only
1I,3-6,8,9	120678	LNG V EXT R AAA HDWR	Left - 70 deg V Hangers Only
1J,3-6,8,9	120679	LNG V EXT L AAA HDWR	Right - 70 deg V Hangers Only
2A	500656	ADULT ANG ADJ F/PLT 10/11" R	RIGHT 10-11" Footrest Width
2A	500657	ADULT ANG ADJ F/PLT 10/11" L	LEFT 10-11" Footrest Width
2B	500658	ADULT ANG ADJ F/PLT 12/13" R	RIGHT 12-13" Footrest Width
2B	500659	ADULT ANG ADJ F/PLT 12/13" L	LEFT 12-13" Footrest Width
2C	500660	ADLT ANGL ADJ F/PLT 14/15	RIGHT 14-15" Footrest Width
2C	500661	ADLT ANGL ADJ F/PLT 14/15	LEFT 14-15" Footrest Width
2D	500662	ADLT ANGL ADJ F/PLT 16/17	RIGHT 16-17" Footrest Width
2D	500663	ADLT ANGL ADJ F/PLT 16/17	LEFT 16-17" Footrest Width
2E	500664	ADLT ANGL ADJ F/PLT 18-20	RIGHT 18-22" Footrest Width
2E	500665	ADLT ANGL ADJ F/PLT 18-20	LEFT 18-22" Footrest Width
3	132626	NUT AUTOMATION M6 X 1.0	
4	106944	WASHER FLAT THIN AN 1/4 ROHS	
5	107199	HANGER EXTENSION SADDLE	
6	104377	3/4" SADDLE THIN	
7	541002	FTRST MOUNTING BRKT-3/8 RAD R	RIGHT
7	541003	FTRST MOUNTING BRKT-3/8 RAD L	LEFT
8	106945	WASHER FLAT SAE 1/4 ROHS	
9	104399	SHCS M6X1X45 12 MM PART THD	
10	106978	FHCS 1/4-28 X 7/8 ROHS	
11	550350	3/4" CLMP ADJ FT PLT	
12	106935	NUT NYLOCK THIN 1/4-28 ROHS	
13	104328	POST HEEL LOOP	
14A	104380-001	ADJUSTABLE FOOT REST STRAP	12 - 14" WIDE
14B	104380-002	ADJUSTABLE FOOT REST STRAP	15 - 16" WIDE
14C	104380-003	ADJUSTABLE FOOT REST STRAP	17 - 18" WIDE
14D	104380-004	ADJUSTABLE FOOT REST STRAP	19 - 20" WIDE
15	102268-001	HHCS M6 X 1 X 25	
16-19	107485	FOOTREST CLAMP ASSM	
20	740260	TOE-ANKLE STRAP ADJ ADULT FOOTPLATE	
21	120659	EXT MNT HARDWARE 1 SIDE	
>>>>		80° HANGERS - SHORT EXT - RIGHT	
1A,2B,3-14A,15	111534	AAA STRT SHT EXT ASM 12-13" W R	Right- 80D- 12-13" W- SHORT
1A,2C,3-14B,15	107928	AAA STRT SHT EXT ASM 14-15" W R	Right- 80D- 14-15" W- SHORT
1A,2D,3-14C,15	107930	AAA STRT SHT EXT ASM 16-17" W R	Right- 80D- 16-17" W- SHORT
1A,2E,3-14D,15	107932	AAA STRT SHT EXT ASM 18-22" W R	Right- 80D- 18-22" W- SHORT
>>>>		80° HANGERS - SHORT EXT - LEFT	
1A,2B,3-14A,15	111535	AAA STRT SHT EXT ASM 12-13" W L	Left- 80D- 12-13" W- SHORT
1A,2C,3-14B,15	107935	AAA STRT SHT EXT ASM 14" W L	Left- 80D- 14-15" W- SHORT
1A,2D,3-14C,15	107937	AAA STRT SHT EXT ASM 16" W L	Left- 80D- 16-17" W- SHORT
1A,2E,3-14D,15	107939	AAA STRT SHT EXT ASM 18" W L	Left- 80D- 18-22" W- SHORT
>>>>		80° HANGERS - MED EXT - RIGHT	
1B,2B,3-14A,15	111536	AAA STRT MED EXT ASM 12-13" W R	Right- 80D- 12-13" W- MED
1B,2C,3-14B,15	107942	AAA STRT MED EXT ASM 14-15" W R	Right- 80D- 14-15" W- MED
1B,2D,3-14C,15	107944	AAA STRT MED EXT ASM 16-17" W R	Right- 80D- 16-17" W- MED
1B,2E,3-14D,15	107946	AAA STRT MED EXT ASM 18-22" W R	Right- 80D- 18-22" W- MED
>>>>		80° HANGERS - MED EXT - LEFT	
1B,2B,3-14A,15	111537	AAA STRT MED EXT ASM 12-13" W L	Left- 80D- 12-13" W- MED
1B,2C,3-14B,15	107949	AAA STRT MED EXT ASM 14" W L	Left- 80D- 14-15" W- MED
1B,2D,3-14C,15	107951	AAA STRT MED EXT ASM 16" W L	Left- 80D- 16-17" W- MED
1B,2E,3-14D,15	107953	AAA STRT MED EXT ASM 18" W L	Left- 80D- 18-22" W- MED
>>>>		80° HANGERS - LONG EXT - RIGHT	

Pos.	Item Number	Description	Remarks
1C,2B,3-14A,15	111538	AAA STRT LNG EXT ASM 12-13" W R	Right- 80D- 12-13" W- LONG
1C,2C,3-14B,15	107956	AAA STRT LNG EXT ASM 14 -15" W R	Right- 80D- 14-15" W- LONG
1C,2D,3-14C,15	107958	AAA STRT LNG EXT ASM 16 -17" W R	Right- 80D- 16-17" W- LONG
1C,2E,3-14D,15	107960	AAA STRT LNG EXT ASM 18 -22" W R	Right- 80D- 18-22" W- LONG
>>>>		80° HANGERS - LONG EXT - LEFT	
1C,2B,3-14A,15	111539	AAA STRT LNG EXT ASM 12-13" W L	Left- 80D- 12-13" W- LONG
1C,2C,3-14B,15	107963	AAA STRT LNG EXT ASM 14W L	Left- 80D- 14-15" W- LONG
1C,2D,3-14C,15	107965	AAA STRT LNG EXT ASM 16W L	Left- 80D- 16-17" W- LONG
1C,2E,3-14D,15	107968	AAA STRT LNG EXT ASM 18W L	Left- 80D- 18-22" W- LONG
>>>>		70° HANGERS - SHORT EXT - RIGHT	
1D,2B,3-14A,15	111540	AAA BNT SHT EXT ASM 12-13" W R	Right- 60D,70D,70D HEMI - 12-13" W- SHORT
1D,2C,3-14B,15	107973	AAA BNT SHT EXT ASM 14 -15" W R	Right- 60D,70D,70D HEMI - 14-15" W- SHORT
1D,2D,3-14C,15	107975	AAA BNT SHT EXT ASM 16 -17" W R	Right- 60D,70D,70D HEMI - 16-17" W- SHORT
1D,2E,3-14D,15	107977	AAA BNT SHT EXT ASM 18 -22" W R	Right- 60D,70D,70D HEMI - 18-22" W- SHORT
>>>>		70° HANGERS - SHORT EXT - LEFT	
1D,2B,3-14A,15	111541	AAA BNT SHT EXT ASM 12-13" W L	Left- 60D,70D,70D HEMI - 12-13" W- SHORT
1D,2C,3-14B,15	107980	AAA BNT SHT EXT ASM 14 -15" W L	Left- 60D,70D,70D HEMI - 14-15" W- SHORT
1D,2D,3-14C,15	107982	AAA BNT SHT EXT ASM 16 -17" W L	Left- 60D,70D,70D HEMI - 16-17" W- SHORT
1D,2E,3-14D,15	107984	AAA BNT SHT EXT ASM 18 -22" W L	Left- 60D,70D,70D HEMI - 18-22" W- SHORT
>>>>		70° HANGERS - MED EXT - RIGHT	
1E,2B,3-14A,15	111542	AAA BNT MED EXT ASM 12-13" W R	Right- 60D,70D,70D HEMI - 12-13" W- MED
1E,2C,3-14B,15	107987	AAA BNT MED EXT ASM 14 -15" W R	Right- 60D,70D,70D HEMI - 14-15" W- MED
1E,2D,3-14C,15	107989	AAA BNT MED EXT ASM 16 -17" W R	Right- 60D,70D,70D HEMI - 16-17" W- MED
1E,2E,3-14D,15	107991	AAA BNT MED EXT ASM 18 -22" W R	Right- 60D,70D,70D HEMI - 18-22" W- MED
>>>>		70° HANGERS - MED EXT - LEFT	
1E,2B,3-14A,15	111543	AAA BNT MED EXT ASM 12-13" W L	Left- 60D,70D,70D HEMI - 12-13" W- MED
1E,2C,3-14B,15	107994	AAA BNT MED EXT ASM 14 -15" W L	Left- 60D,70D,70D HEMI - 14-15" W- MED
1E,2D,3-14C,15	107996	AAA BNT MED EXT ASM 16 -17" W L	Left- 60D,70D,70D HEMI - 16-17" W- MED
1E,2E,3-14D,15	107998	AAA BNT MED EXT ASM 18 -22" W L	Left- 60D,70D,70D HEMI - 18-22" W- MED
>>>>		70° HANGERS - LONG EXT - RIGHT	
1F,2B,3-14A,15	111544	AAA BNT LONG EXT ASM 12-13" W R	Right- 60D,70D,70D HEMI - 12-13" W- LONG
1F,2C,3-14B,15	108001	AAA BNT LONG EXT ASM 14 -15" W R	Right- 60D,70D,70D HEMI - 14-15" W- LONG
1F,2D,3-14C,15	108003	AAA BNT LONG EXT ASM 16 -17" W R	Right- 60D,70D,70D HEMI - 16-17" W- LONG
1F,2E,3-14D,15	108005	AAA BNT LONG EXT ASM 18 -22" W R	Right- 60D,70D,70D HEMI - 18-22" W- LONG
>>>>		70° HANGERS - LONG EXT - LEFT	
1F,2B,3-14A,15	111545	AAA BNT LONG EXT ASM 12-13" W L	Left- 60D,70D,70D HEMI - 12-13" W- LONG
1F,2C,3-14B,15	108008	AAA BNT LONG EXT ASM 14 -15" W L	Left- 60D,70D,70D HEMI - 14-15" W- LONG
1F,2D,3-14C,15	108010	AAA BNT LONG EXT ASM 16 -17" W L	Left- 60D,70D,70D HEMI - 16-17" W- LONG
1F,2E,3-14D,15	108012	AAA BNT LONG EXT ASM 18 -22" W L	Left- 60D,70D,70D HEMI - 18-22" W- LONG
>>>>		70° "V" HANGERS - MED EXT - RIGHT	
1G,2A,3-15	111546	AAA V MED EXT ASM 10-11" W R	Right- 70D V hangers only 10-11" W- MED
1G,2B,3-15	111548	AAA V MED EXT ASM 12-13" W R	Right- 70D V hangers only 12-13" W- MED
1G,2C,3-15	108015	AAA V MED EXT ASM 14 -15" W R	Right- 70D V hangers only 14-15" W- MED
1G,2D,3-15	108017	AAA V MED EXT ASM 16 -17" W R	Right- 70D V hangers only 16-18" W- MED
1G,2E,3-15	108019	AAA V MED EXT ASM 18 -18" W R	Right- 70D V hangers only 18-22" W- MED
>>>>		70° "V" HANGERS - MED EXT - LEFT	
1G,2A,3-15	111547	AAA V MED EXT ASM 10-11" W L	Left- 70D V hangers only 10-11" W- MED
1G,2B,3-15	111549	AAA V MED EXT ASM 12-13" W L	Left- 70D V hangers only 12-13" W- MED
1G,2C,3-15	108022	AAA V MED EXT ASM 14 -15"W L	Left- 70D V hangers only 14-15" W- MED
1G,2D,3-15	108024	AAA V MED EXT ASM 16 -17" W L	Left- 70D V hangers only 16-18" W- MED
1G,2E,3-15	108026	AAA V MED EXT ASM 18 -22: W L	Left- 70D V hangers only 18-22" W- MED
>>>>		70° "V" HANGERS - LONG EXT - RIGHT	
1H,2A,3-15	111550	AAA V LONG EXT ASM 10-11" W R	Right- 70D V hangers only 10-11" W- LONG
1H,2B,3-15	111552	AAA V LONG EXT ASM 12-13" W R	Right- 70D V hangers only 12-13" W- LONG
1H,2C,3-15	108029	AAA V LONG EXT ASM 14 -15" W R	Right- 70D V hangers only 14-15" W- LONG
1H,2D,3-15	108031	AAA V LONG EXT ASM 16 -17" W R	Right- 70D V hangers only 16-18" W- LONG

Pos.	Item Number	Description	Remarks
1H,2E,3-15	108033	AAA V LONG EXT ASM 18 -22: W R	Right- 70D V hangers only 18-22" W- LONG
>>>>		70° "V" HANGERS - LONG EXT - LEFT	
1H,2A,3-15	111551	AAA V LONG EXT ASM 10-11" W L	Left- 70D V hangers only 10-11" W- LONG
1H,2B,3-15	111553	AAA V LONG EXT ASM 12-13" W L	Left- 70D V hangers only 12-13" W- LONG
1H,2C,3-15	108036	AAA V LONG EXT ASM 14 -15" W L	Left- 70D V hangers only 14-15" W- LONG
1H,2D,3-15	108038	AAA V LONG EXT ASM 16 -17" W L	Left- 70D V hangers only 16-18" W- LONG
1H,2E,3-15	108040	AAA V LONG EXT ASM 18 -22" W L	Left- 70D V hangers only 18-22" W- LONG
		Ship assembled part #	Use with multiple assemblies
	ASSY-HNG-FP	HANGER/FOOTPLATE ASSY REQUIRED	add with Hanger & Footplate kit

KIDS ANGLE ADJ FOOTPLATE EXTENSION MOUNT

[02/19/2020]

Note: Footplate Assemblies are set to footrest width; please see "Footplate Formula" table for seat width conversion.

Note: Zippie Iris (ZRS&ZRSE) and Zippie TS (Z1A&Z1SE) only use Straight Extension Tube.

Note: V Style Hangers are not available on Swing Away Style chairs effective 7/14/14; see the "Prior To" ordering guide for V Style footplate assemblies.

To have complete Footrest ship assembled, choose compatible Hanger + Footplate part numbers and add "ASSY-HNG-FP" to order

FOOTPLATE FORMULA
0" Inset (Seat Width) = Footrest Width
1" Inset (Seat Width) -2 = Footrest Width
V Hanger (Seat Width) -4 = Footrest Width
Offset Hanger Receiver (Seat Width) +2" = Footrest Width

MEASURING GUIDE

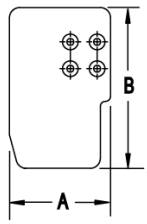

CHAIR WIDTH	"A"	"B"
10" W	3.55"	6.00"
11" W	4.05"	6.00"
12" W	4.55"	6.00"
13" W	5.05"	6.00"
14" W	5.55"	6.00"
15" W	6.05"	6.00"
16" W	6.55"	6.00"

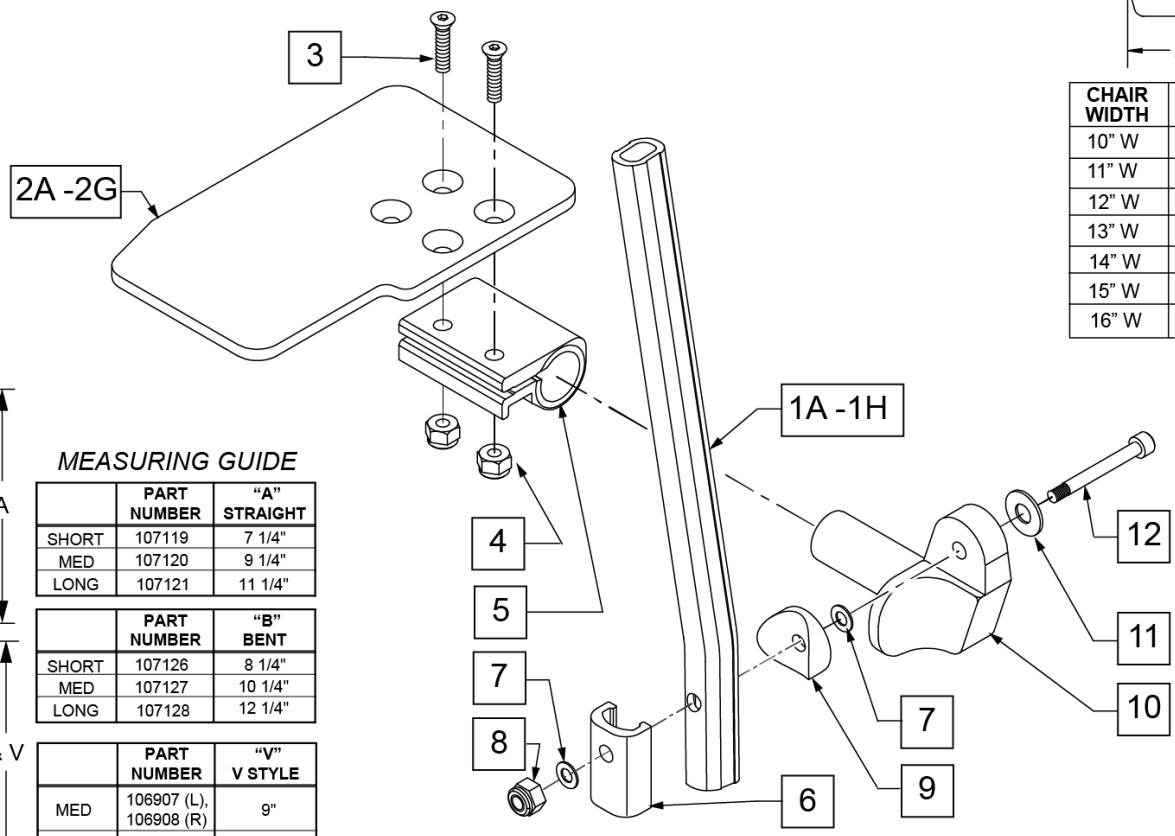

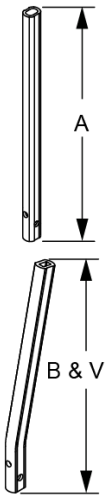

MEASURING GUIDE

	PART NUMBER	"A" STRAIGHT
SHORT	107119	7 1/4"
MED	107120	9 1/4"
LONG	107121	11 1/4"

	PART NUMBER	"B" BENT
SHORT	107126	8 1/4"
MED	107127	10 1/4"
LONG	107128	12 1/4"

	PART NUMBER	"V" V STYLE
MED	106907 (L), 106908 (R)	9"
X-LONG	106909 (L), 106910 (R)	13"

Pos.	Item Number	Description	Remarks
1A	107119	TUBE FOOTREST EXT STRAIGHT SHORT	80 deg hangers only
1B	107120	TUBE FOOTREST EXT STRAIGHT MED	80 deg hangers only
1C	107121	TUBE FOOTREST EXT STRAIGHT LONG	80 deg hangers only
1D	107126	TUBE FOOTREST EXT SHORT	60,70,70 Hemi Hangers
1E	107127	TUBE FOOTREST EXT MED	60,70,70 Hemi Hangers

Pos.	Item Number	Description	Remarks
1F	107128	TUBE FOOTREST EXT LONG	60,70,70 Hemi Hangers
1G	106907	EXT TUBE V ONLY D2 MED LEFT	70 deg V hangers only-LEFT
1G	106908	EXT TUBE V ONLY D2 MED RIGHT	70 deg V hangers only-RIGHT
1H	106909	EXT TUBE V ONLY D2 X-LONG LEFT	70 deg V hangers only-LEFT
1H	106910	EXT TUBE V ONLY D2 X-LONG RIGHT	70 deg V hangers only-RIGHT
2A	500635	KIDS ANGL ADJ F/PLT 10" R	RIGHT -10" Footrest Width
2A	500636	KIDS ANGL ADJ F/PLT 10" L	LEFT -10" Footrest Width
2B	500637	KIDS ANGL ADJ F/PLT 11" R	RIGHT -11" Footrest Width
2B	500638	KIDS ANGL ADJ F/PLT 11" L	LEFT -11" Footrest Width
2C	500639	KIDS ANGL ADJ F/PLT 12" R	RIGHT -12" Footrest Width
2C	500640	KIDS ANGL ADJ F/PLT 12" L	LEFT -12" Footrest Width
2D	500641	KIDS ANGL ADJ F/PLT 13" R	RIGHT -13" Footrest Width
2D	500642	KIDS ANGL ADJ F/PLT 13" L	LEFT -13" Footrest Width
2E	500643	KIDS ANGL ADJ F/PLT 14" R	RIGHT -14" Footrest Width
2E	500644	KIDS ANGL ADJ F/PLT 14" L	LEFT -14" Footrest Width
2F	500645	KIDS ANGL ADJ F/PLT 15" R	RIGHT -15" Footrest Width
2F	500646	KIDS ANGL ADJ F/PLT 15" L	LEFT -15" Footrest Width
2G	500647	KIDS ANGL ADJ F/PLT 16" R	RIGHT -16" Footrest Width
2G	500648	KIDS ANGL ADJ F/PLT 16" L	LEFT -16" Footrest Width
3	106978	FHCS 1/4 -28 x 7/8 ROHS	
4	106935	NUT NYLOCK THIN 1/4-28 ROHS	
5	550350	3/4" CLAMP ADJ FT PLT	
6	107199	HANGER EXTENSION SADDLE	
7	106944	WASHER FLAT THIN AN 1/4 ROHS	
8	132626	NUT AUTOMATION M6 x 1.0	
9	104377	3/4" SADDLE THIN	
10	541002	FOOTREST MOUNTING BRKT 3/8 RAD R	RIGHT
10	541003	FOOTREST MOUNTING BRKT 3/8 RAD L	LEFT
11	106945	WASHER FLAT SAE 1/4 ROHS	
12	104399	SHCS M6 x 1 x 45 12mm PART THD	
1A,2C,3-12	111310	KAA STRT SHT EXT ASM 12W R	RIGHT- 80D- 12 W- SHORT
1A,2D,3-12	111311	KAA STRT SHT EXT ASM 13W R	RIGHT- 80D- 13 W- SHORT
1A,2E,3-12	111312	KAA STRT SHT EXT ASM 14W R	RIGHT- 80D- 14 W- SHORT
1A,2F,3-12	111313	KAA STRT SHT EXT ASM 15W R	RIGHT- 80D- 15 W- SHORT
1A,2G,3-12	111314	KAA STRT SHT EXT ASM 16W R	RIGHT- 80D- 16 W- SHORT
1A,2C,3-12	111315	KAA STRT SHT EXT ASM 12W L	LEFT- 80D- 12 W- SHORT
1A,2D,3-12	111316	KAA STRT SHT EXT ASM 13W L	LEFT- 80D- 13 W- SHORT
1A,2E,3-12	111317	KAA STRT SHT EXT ASM 14W L	LEFT- 80D- 14 W- SHORT
1A,2F,3-12	111318	KAA STRT SHT EXT ASM 15W L	LEFT- 80D- 15 W- SHORT
1A,2G,3-12	111319	KAA STRT SHT EXT ASM 16W L	LEFT- 80D- 16 W- SHORT
1B,2C,3-12	111320	KAA STRT MED EXT ASM 12W R	RIGHT- 80D- 12 W- MED
1B,2D,3-12	111321	KAA STRT MED EXT ASM 13W R	RIGHT- 80D- 13 W- MED
1B,2E,3-12	111322	KAA STRT MED EXT ASM 14W R	RIGHT- 80D- 14 W- MED
1B,2F,3-12	111323	KAA STRT MED EXT ASM 15W R	RIGHT- 80D- 15 W- MED
1B,2G,3-12	111324	KAA STRT MED EXT ASM 16W R	RIGHT- 80D- 16 W- MED
1B,2C,3-12	111325	KAA STRT MED EXT ASM 12W L	LEFT- 80D- 12 W- MED
1B,2D,3-12	111326	KAA STRT MED EXT ASM 13W L	LEFT- 80D- 13 W- MED
1B,2E,3-12	111327	KAA STRT MED EXT ASM 14W L	LEFT- 80D- 14 W- MED
1B,2F,3-12	111328	KAA STRT MED EXT ASM 15W L	LEFT- 80D- 15 W- MED
1B,2G,3-12	111329	KAA STRT MED EXT ASM 16W L	LEFT- 80D- 16 W- MED
1C,2C,3-12	111330	KAA STRT LNG EXT ASM 12W R	RIGHT- 80D- 12 W- LONG
1C,2D,3-12	111331	KAA STRT LNG EXT ASM 13W R	RIGHT- 80D- 13 W- LONG
1C,2E,3-12	111332	KAA STRT LNG EXT ASM 14W R	RIGHT- 80D- 14 W- LONG
1C,2F,3-12	111333	KAA STRT LNG EXT ASM 15W R	RIGHT- 80D- 15 W- LONG
1C,2G,3-12	111334	KAA STRT LNG EXT ASM 16W R	RIGHT- 80D- 16 W- LONG
1C,2C,3-12	111335	KAA STRT LNG EXT ASM 12W L	LEFT- 80D- 12 W- LONG

Pos.	Item Number	Description	Remarks
1C,2D,3-12	111336	KAA STRT LNG EXT ASM 13W L	LEFT- 80D- 13 W- LONG
1C,2E,3-12	111337	KAA STRT LNG EXT ASM 14W L	LEFT- 80D- 14 W- LONG
1C,2F,3-12	111338	KAA STRT LNG EXT ASM 15W L	LEFT- 80D- 15 W- LONG
1C,2G,3-12	111339	KAA STRT LNG EXT ASM 16W L	LEFT- 80D- 16 W- LONG
1D,2C,3-12	111340	KAA BNT SHT EXT ASM 12W R	RIGHT- 60 & 70D- 12 W- SHORT
1D,2D,3-12	111341	KAA BNT SHT EXT ASM 13W R	RIGHT- 60 & 70D- 13 W- SHORT
1D,2E,3-12	111342	KAA BNT SHT EXT ASM 14W R	RIGHT- 60 & 70D- 14 W- SHORT
1D,2F,3-12	111343	KAA BNT SHT EXT ASM 15W R	RIGHT- 60 & 70D- 15 W- SHORT
1D,2G,3-12	111344	KAA BNT SHT EXT ASM 16W R	RIGHT- 60 & 70D- 16 W- SHORT
1D,2C,3-12	111345	KAA BNT SHT EXT ASM 12W L	LEFT- 70D- 12 W- SHORT
1D,2D,3-12	111346	KAA BNT SHT EXT ASM 13W L	LEFT- 70D- 13 W- SHORT
1D,2E,3-12	111347	KAA BNT SHT EXT ASM 14W L	LEFT- 70D- 14 W- SHORT
1D,2F,3-12	111348	KAA BNT SHT EXT ASM 15W L	LEFT- 70D- 15 W- SHORT
1D,2G,3-12	111349	KAA BNT SHT EXT ASM 16W L	LEFT- 70D- 16 W- SHORT
1E,2C,3-12	111350	KAA BNT MED EXT ASM 12W R	RIGHT- 70D- 12 W- MED
1E,2D,3-12	111351	KAA BNT MED EXT ASM 13W R	RIGHT- 70D- 13 W- MED
1E,2E,3-12	111352	KAA BNT MED EXT ASM 14W R	RIGHT- 60 & 70D- 14 W- MED
1E,2F,3-12	111353	KAA BNT MED EXT ASM 15W R	RIGHT- 60 & 70D- 15 W- MED
1E,2G,3-12	111354	KAA BNT MED EXT ASM 16W R	RIGHT- 60 & 70D- 16 W- MED
1E,2C,3-12	111355	KAA BNT MED EXT ASM 12W L	LEFT- 60 & 70D- 12 W- MED
1E,2D,3-12	111356	KAA BNT MED EXT ASM 13W L	LEFT- 60 & 70D- 13 W- MED
1E,2E,3-12	111357	KAA BNT MED EXT ASM 14W L	LEFT- 60 & 70D- 14 W- MED
1E,2F,3-12	111358	KAA BNT MED EXT ASM 15W L	LEFT- 60 & 70D- 15 W- MED
1E,2G,3-12	111359	KAA BNT MED EXT ASM 16W L	LEFT- 60 & 70D- 16 W- MED
1F,2C,3-12	111360	KAA BNT LNG EXT ASM 12W R	RIGHT- 60 & 70D- 12 W- LONG
1F,2D,3-12	111361	KAA BNT LNG EXT ASM 13W R	RIGHT- 60 & 70D- 13 W- LONG
1F,2E,3-12	111362	KAA BNT LNG EXT ASM 14W R	RIGHT- 60 & 70D- 14 W- LONG
1F,2F,3-12	111363	KAA BNT LNG EXT ASM 15W R	RIGHT- 60 & 70D- 15 W- LONG
1F,2G,3-12	111364	KAA BNT LNG EXT ASM 16W R	RIGHT- 60 & 70D- 16 W- LONG
1F,2C,3-12	111365	KAA BNT LNG EXT ASM 12W L	LEFT- 60 & 70D- 12 W- LONG
1F,2D,3-12	111366	KAA BNT LNG EXT ASM 13W L	LEFT- 60 & 70D- 13 W- LONG
1F,2E,3-12	111367	KAA BNT LNG EXT ASM 14W L	LEFT- 60 & 70D- 14 W- LONG
1F,2F,3-12	111368	KAA BNT LNG EXT ASM 15W L	LEFT- 60 & 70D- 15 W- LONG
1F,2G,3-12	111369	KAA BNT LNG EXT ASM 16W L	LEFT- 60 & 70D- 16 W- LONG
1G,2A,3-12	111370	KAA V MED EXT ASM 10W R	RIGHT- 70D V hangers only 10 W- MED
1G,2B,3-12	111371	KAA V MED EXT ASM 11W R	RIGHT- 70D V hangers only 11 W- MED
1G,2C,3-12	111372	KAA V MED EXT ASM 12W R	RIGHT- 70D V hangers only 12 W- MED
1G,2D,3-12	111373	KAA V MED EXT ASM 13W R	RIGHT- 70D V hangers only 13 W- MED
1G,2E,3-12	111374	KAA V MED EXT ASM 14W R	RIGHT- 70D V hangers only 14 W- MED
1G,2F,3-12	111375	KAA V MED EXT ASM 15W R	RIGHT- 70D V hangers only 15 W- MED
1G,2G,3-12	111376	KAA V MED EXT ASM 16W R	RIGHT- 70D V hangers only 16 W- MED
1G,2A,3-12	111377	KAA V MED EXT ASM 10W L	LEFT- 70D V hangers only 10 W- MED
1G,2B,3-12	111378	KAA V MED EXT ASM 11W L	LEFT- 70D V hangers only 11 W- MED
1G,2C,3-12	111379	KAA V MED EXT ASM 12W L	LEFT- 70D V hangers only 12 W- MED
1G,2D,3-12	111380	KAA V MED EXT ASM 13W L	LEFT- 70D V hangers only 13 W- MED
1G,2E,3-12	111381	KAA V MED EXT ASM 14W L	LEFT- 70D V hangers only 14 W- MED
1G,2F,3-12	111382	KAA V MED EXT ASM 15W L	LEFT- 70D V hangers only 15 W- MED
1G,2G,3-12	111383	KAA V MED EXT ASM 16W L	LEFT- 70D V hangers only 16 W- MED
1H,2A,3-12	111384	KAA V LNG EXT ASM 10W R	RIGHT- 70D V hangers only 10 W- LONG
1H,2B,3-12	111385	KAA V LNG EXT ASM 11W R	RIGHT- 70D V hangers only 11 W- LONG
1H,2C,3-12	111386	KAA V LNG EXT ASM 12W R	RIGHT- 70D V hangers only 12 W- LONG
1H,2D,3-12	111387	KAA V LNG EXT ASM 13W R	RIGHT- 70D V hangers only 13 W- LONG
1H,2E,3-12	111388	KAA V LNG EXT ASM 14W R	RIGHT- 70D V hangers only 14 W- LONG
1H,2F,3-12	111389	KAA V LNG EXT ASM 15W R	RIGHT- 70D V hangers only 15 W- LONG
1H,2G,3-12	111390	KAA V LNG EXT ASM 16W R	RIGHT- 70D V hangers only 16 W- LONG
1H,2A,3-12	111391	KAA V LNG EXT ASM 10W L	LEFT- 70D V hangers only 10 W- LONG

Pos.	Item Number	Description	Remarks
1H,2B,3-12	111392	KAA V LNG EXT ASM 11W L	LEFT- 70D V hangers only 11 W- LONG
1H,2C,3-12	111393	KAA V LNG EXT ASM 12W L	LEFT- 70D V hangers only 12 W- LONG
1H,2D,3-12	111394	KAA V LNG EXT ASM 13W L	LEFT- 70D V hangers only 13 W- LONG
1H,2E,3-12	111395	KAA V LNG EXT ASM 14W L	LEFT- 70D V hangers only 14 W- LONG
1H,2F,3-12	111396	KAA V LNG EXT ASM 15W L	LEFT- 70D V hangers only 15 W- LONG
1H,2G,3-12	111397	KAA V LNG EXT ASM 16W L	LEFT- 70D V hangers only 16 W- LONG
		Ship assembled part #	Use with multiple assemblies
	ASSY-HNG-FP	HANGER/FOOTPLATE ASSY REQUIRED	add with Hanger & Footplate kit

PLATFORM FLIP-UP FOOTPLATE

[10/2017]

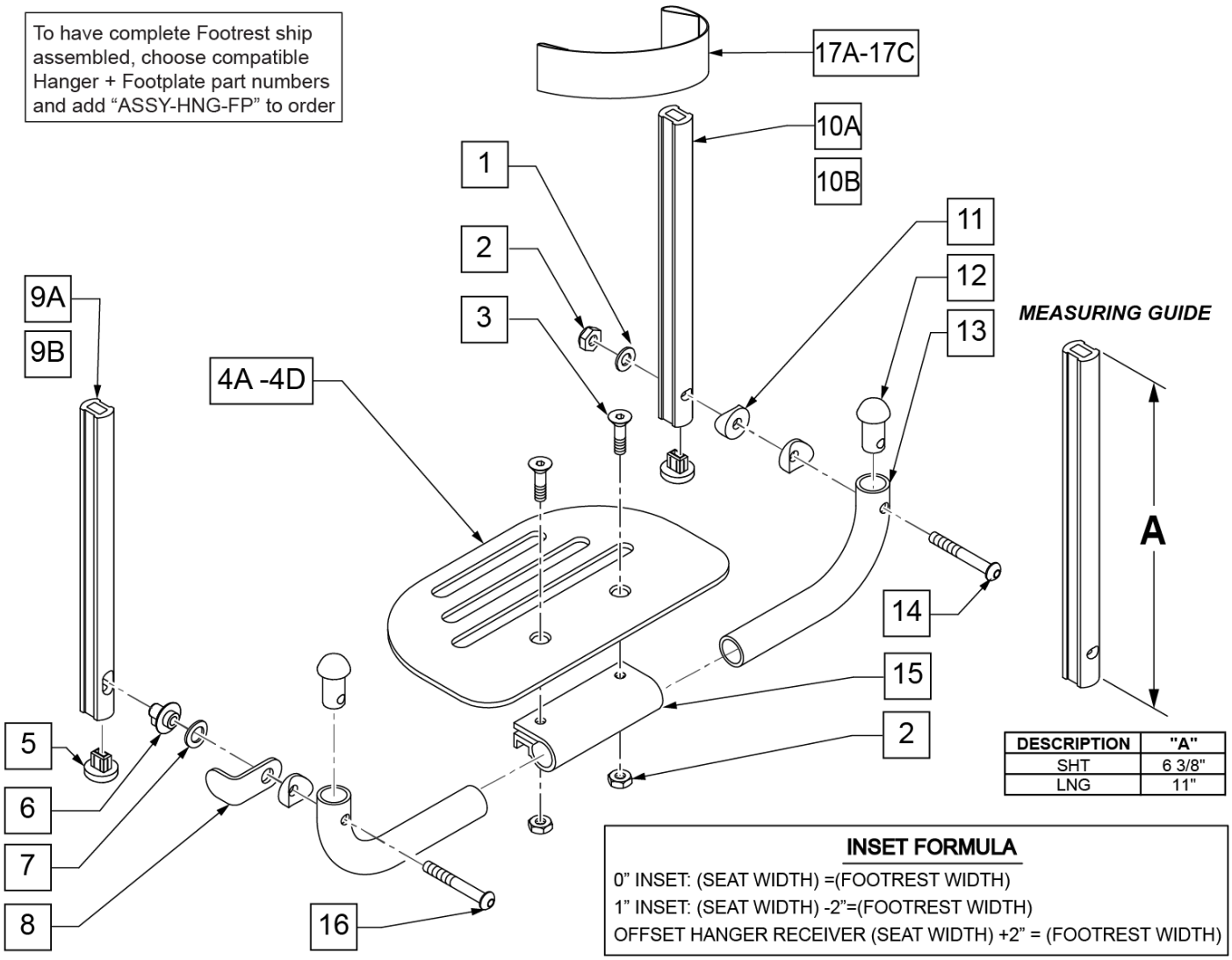

DESCRIPTION	"A"
SHT	6 3/8"
LNG	11"

Pos.	Item Number	Description	Remarks
1	106944	WASHER FLAT THIN AN 1/4 ROHS	
2	106941	NUT AUTOMATION 1/4-28 ROHS	
3	106978	FHCS 1/4-28 X 7/8 ROHS	
4A	500651	PLATFORM F/PLT 8 x 5 1/2"	12 -14" Footrest Width
4B	500652	PLATFORM F/PLT 10" x 5 1/2"	15 -17" Footrest Width
4C	500653	PLATFORM F/PLT 12" x 5 1/2"	18 -20" Footrest Width
4D	500654	PLATFORM F/PLT 14" x 5 1/2	21 -22" Footrest Width
5	113221	PLUG DOUBLE D EXT TUBE	
6	540410	F/UP FOOTREST KEY STUD D2	
7	107385	WASHER CURVED 3/8 ROHS	
8	505078	FOOTREST RETAINING BRACKET	
9A	106875	EXT TBE F/UP KEY SHT	Short -Latch Side
9B	106876	EXT TBE F/UP KEY LNG	Long -Latch Side
10A	106873	EXT TBE F/UP SLT SHT	Short -Pivot Side
10B	106874	EXT TBE F/UP SLT LNG	Long -Pivot Side
11	561003	3/4" SADDLE THIN	
12	561034	SHORT DOME PLUG	

Pos.	Item Number	Description	Remarks
14	106964	BHCS 1/4-28 X 2 ROHS	
15	550351	PLATFORM FOOTPLATE CLAMP	
16	107027	BHCS 1/4-28 X 1-1/4 SHLDR ROHS	
17A	740130	LEG STRAP 10"-14" BLK	12-14" Footrest Width
17B	740131	LEG STRAP 15"-17" BLK	15-17" Footrest Width
17C	740132	LEG STRAP 18"-20" BLK	18-20" Footrest Width
1-4A,6-8,11-16	900306	PLTFM F/P PLT BLK 12" D2 W/ INSTR	12" Footrest Width
1-4A,6-8,11-16	900307	PLTFM F/P PLT BLK 13" D2 W/ INSTR	13" Footrest Width
1-4A,6-8,11-16	900308	PLTFM F/P PLT BLK 14" D2 W /INSTR	14" Footrest Width
1-4B,6-8,11-16	900309	PLTFM F/P PLT BLK 15" D2 W /INSTR	15" Footrest Width
1-4B,6-8,11-16	900310	PLTFM F/P PLT BLK 16" D2 W /INSTR	16" Footrest Width
1-4B,6-8,11-16	900311	PLTFM F/P PLT BLK 17" D2 W /INSTR	17" Footrest Width
1-4C,6-8,11-16	900312	PLTFM F/P PLT BLK 18" D2 W /INSTR	18" Footrest Width
1-4C,6-8,11-16	900313	PLTFM F/P PLT BLK 19" D2 W /INSTR	19" Footrest Width
1-4C,6-8,11-16	900314	PLTFM F/P PLT BLK 20" D2 W/ INSTR	20" Footrest Width
1-4D,6-8,11-16	900315	PLTFM F/P PLT BLK 21" D2 W/ INSTR	21" Footrest Width
1-4D,6-8,11-16	900316	PLTFM F/P PLT BLK 22" D2 W/ INSTR	22" Footrest Width
		SHORT EXT ASSEMBLIES	
1-3,4A,5-8,9A,10B,11-16,17A	108043	PLTFRM FLIP FTRST SHT 12W	12" wide (Short)
1-3,4A,5-8,9A,10B,11-16,17A	108044	PLTFRM FLIP FTRST SHT 13W	13" wide (Short)
1-3,4A,5-8,9A,10B,11-16,17A	108045	PLTFRM FLIP FTRST SHT 14W	14" wide (Short)
1-3,4B,5-8,9A,10B,11-16,17B	108046	PLTFRM FLIP FTRST SHT 15W	15" wide (Short)
1-3,4B,5-8,9A,10B,11-16,17B	108047	PLTFRM FLIP FTRST SHT 16W	16" wide (Short)
1-3,4B,5-8,9A,10B,11-16,17B	108048	PLTFRM FLIP FTRST SHT 17W	17" wide (Short)
1-3,4C,5-8,9A,10B,11-16,17C	108049	PLTFRM FLIP FTRST SHT 18W	18" wide (Short)
1-3,4C,5-8,9A,10B,11-16,17C	108051	PLTFRM FLIP FTRST SHT 19W	19" wide (Short)
1-3,4C,5-8,9A,10B,11-16,17C	108052	PLTFRM FLIP FTRST SHT 20W	20" wide (Short)
1-3,4D,5-8,9A,10B,11-16,17C	111554	PLTFRM FLIP FTRST SHT 21W	21" wide (Short)
1-3,4D,5-8,9A,10B,11-16,17C	111555	PLTFRM FLIP FTRST SHT 22W	22" wide (Short)
		LONG EXT ASSEMBLIES	
1-3,4A,5-8,9B,10A,11-16,17A	108053	PLTFRM FLIP FTRST LONG 12W	12" wide (Long)
1-3,4A,5-8,9B,10A,11-16,17A	108054	PLTFRM FLIP FTRST LONG 13W	13" wide (Long)
1-3,4A,5-8,9B,10A,11-16,17A	108055	PLTFRM FLIP FTRST LONG 14W	14" wide (Long)
1-3,4B,5-8,9B,10A,11-16,17B	108056	PLTFRM FLIP FTRST LONG 15W	15" wide (Long)
1-3,4B,5-8,9B,10A,11-16,17B	108057	PLTFRM FLIP FTRST LONG 16W	16" wide (Long)
1-3,4B,5-8,9B,10A,11-16,17B	108058	PLTFRM FLIP FTRST LONG 17W	17" wide (Long)
1-3,4C,5-8,9B,10A,11-16,17C	108059	PLTFRM FLIP FTRST LONG 18W	18" wide (Long)
1-3,4C,5-8,9B,10A,11-16,17C	108060	PLTFRM FLIP FTRST LONG 19W	19" wide (Long)
1-3,4C,5-8,9B,10A,11-16,17C	108061	PLTFRM FLIP FTRST LONG 20W	20" wide (Long)
1-3,4D,5-8,9B,10A,11-16,17C	111556	PLTFRM FLIP FTRST LONG 21W	21" wide (Long)
1-3,4D,5-8,9B,10A,11-16,17C	111557	PLTFRM FLIP FTRST LONG 22W	22" wide (Long)
		Ship assembled part #	Use with multiple assemblies
	ASSY-HNG-FP	HANGER/FOOTPLATE ASSY REQUIRED	add with Hanger & Footplate kit

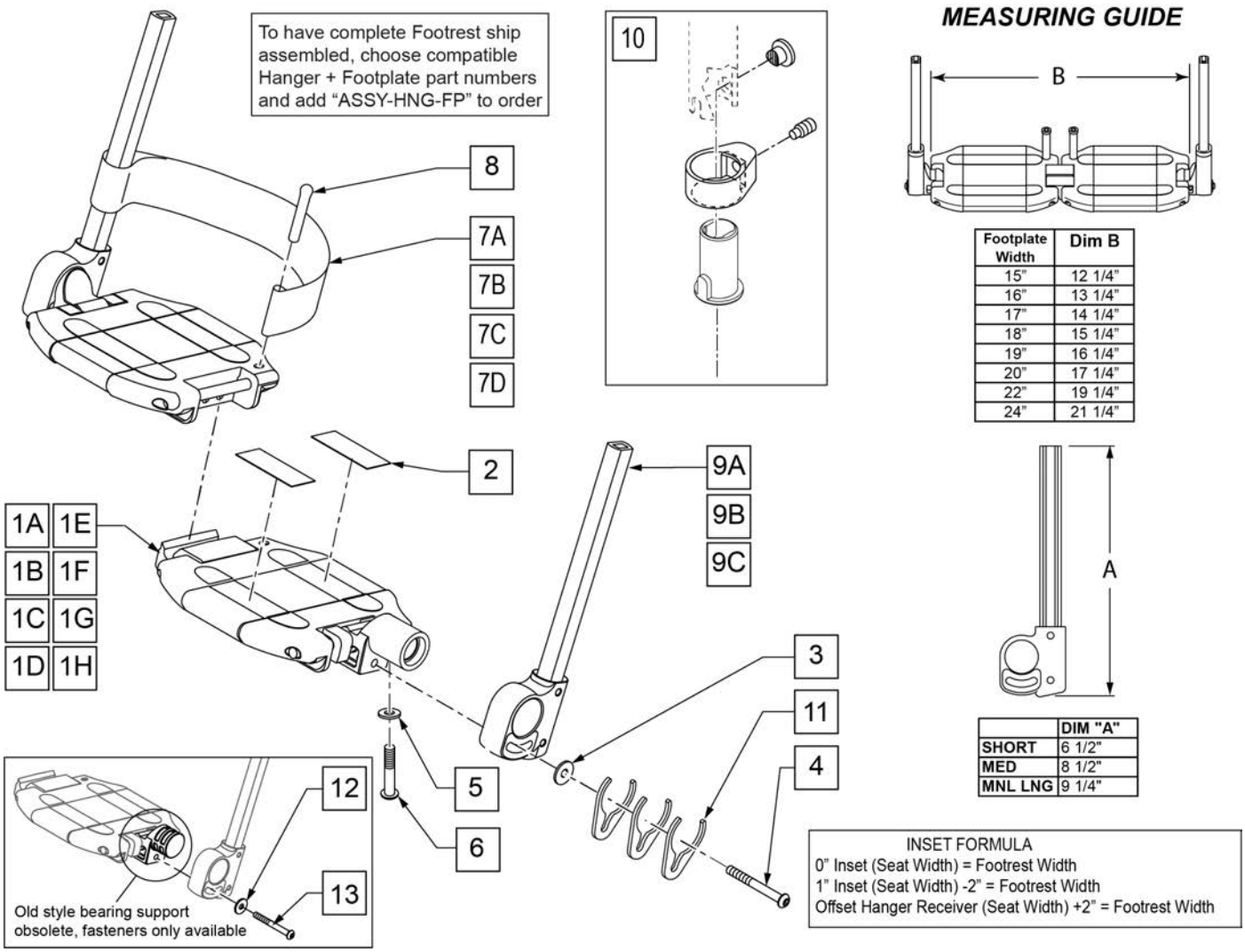

Footplate Width	Dim B
15"	12 1/4"
16"	13 1/4"
17"	14 1/4"
18"	15 1/4"
19"	16 1/4"
20"	17 1/4"
22"	19 1/4"
24"	21 1/4"

	DIM "A"
SHORT	6 1/2"
MED	8 1/2"
MNL LNG	9 1/4"

Pos.	Item Number	Description	Remarks
2	360010	FOOT BOARD SKID TAPE	
3	250070	M6 WASHER	
4	210000	M6 x 55 8.8 BUTTON HD CAP SCRW	
5	106944	1/4 AN WASHER FLAT THIN	
6	106958	1/4-20 x 1 HEX C/S	
7A	741151	HEEL LOOP 14-15 CMPST EA 13.24 44	15" Footrest Width
7B	741156	HEEL LOOP 18-20 CMPST HEMI	16 -17" Footrest Width
7C	741153	HEEL LOOP 18-20 CMPST/14-15 ANG ADJ	18 -20" Footrest Width
7D	741253	HEEL LOOP ADLT ADJ F/PLT 18-20	21 & 22" Footrest Width
8	561040	HEEL LOOP PEG	
9A	109780	EXT TUBE PLTFRM SMALL ASSM	SMALL EXT
9B	109781	EXT TUBE PLTFRM MEDIUM ASSM	MEDIUM EXT
9C	109782	EXT TUBE PLTFRM LONG ASSM	LONG EXT
10	107485	FOOTREST CLAMP ASSM	
1A,2-7A,8,11	820620	LOCKING FTPLT 15" W LEFT	Left -15" Footrest Width
1A,2-7A,8,11	820621	LOCKING FTPLT 15" W RIGHT	Right -15" Footrest Width
1B,2-7B,8,11	820622	LOCKING FTPLT 16" W LEFT	Left -16" Footrest Width
1B,2-7B,8,11	820623	LOCKING FTPLT 16" W RIGHT	Right -16" Footrest Width

Pos.	Item Number	Description	Remarks
1C,2-7B,8,11	820624	LOCKING FTPLT 17" W LEFT	Left -17" Footrest Width
1C,2-7B,8,11	820625	LOCKING FTPLT 17" W RIGHT	Right -17" Footrest Width
1D,2-7C,8,11	820626	LOCKING FTPLT 18" W LEFT	Left -18" Footrest Width
1D,2-7C,8,11	820627	LOCKING FTPLT 18" W RIGHT	Right -18" Footrest Width
1E,2-7C,8,11	820628	LOCKING FTPLT 19" W LEFT	Left -19" Footrest Width
1E,2-7C,8,11	820629	LOCKING FTPLT 19" W RIGHT	Right -19" Footrest Width
1F,2-7C,8,11	820630	LOCKING FTPLT 20" W LEFT	Left -20" Footrest Width
1F,2-7C,8,11	820631	LOCKING FTPLT 20" W RIGHT	Right -20" Footrest Width
1H,2-7D,8,11	820632	LOCKING FTPLT 22" W LEFT	Left -22" Footrest Width
1H,2-7D,8,11	820633	LOCKING FTPLT 22" W RIGHT	Right -22" Footrest Width
		FOOTPLATE W/ SMALL EXT	
1A,2-7A,8,9A,11	109783	15" W LOCKING F/PLT SMALL EXT HL	Small Ext 15" Footrest Width
1B,2-7B,8,9A,11	109787	16" W LOCKING F/PLT SMALL EXT HL	Small Ext 16" Footrest Width
1C,2-7B,8,9A,11	109790	17" W LOCKING F/PLT SMALL EXT HL	Small Ext 17" Footrest Width
1D,2-7C,8,9A,11	109793	18" W LOCKING F/PLT SMALL EXT HL	Small Ext 18" Footrest Width
1E,2-7C,8,9A,11	109796	19" W LOCKING F/PLT SMALL EXT HL	Small Ext 19" Footrest Width
1F,2-7C,8,9A,11	109799	20" W LOCKING F/PLT SMALL EXT HL	Small Ext 20" Footrest Width
1G,2-7D,8,9A,11	109802	21" W LOCKING F/PLT SMALL EXT HL	Small Ext 21" Footrest Width
1H,2-7D,8,9A,11	109805	22" W LOCKING F/PLT SMALL EXT HL	Small Ext 22" Footrest Width
		FOOTPLATE W/ MED EXT	
1A,2-7A,8,9B,11	109784	15" W LOCKING F/PLT MED EXT HL	Med Ext 15" Footrest Width
1B,2-7B,8,9B,11	109788	16" W LOCKING F/PLT MED EXT HL	Med Ext 16" Footrest Width
1C,2-7B,8,9B,11	109791	17" W LOCKING F/PLT MED EXT HL	Med Ext 17" Footrest Width
1D,2-7C,8,9B,11	109794	18" W LOCKING F/PLT MED EXT HL	Med Ext 18" Footrest Width
1E,2-7C,8,9B,11	109797	19" W LOCKING F/PLT MED EXT HL	Med Ext 19" Footrest Width
1F,2-7C,8,9B,11	109800	20" W LOCKING F/PLT MED EXT HL	Med Ext 20" Footrest Width
1G,2-7D,8,9B,11	109803	21" W LOCKING F/PLT MED EXT HL	Med Ext 21" Footrest Width
1H,2-7D,8,9B,11	109806	22" W LOCKING F/PLT MED EXT HL	Med Ext 22" Footrest Width
		FOOTPLATE W/ LONG EXT	
1A,2-7A,8,9C,11	109786	15" W LOCKING F/PLT LONG EXT HL	Long Ext 15" Footrest Width
1B,2-7B,8,9C,11	109789	16" W LOCKING F/PLT LONG EXT HL	Long Ext 16" Footrest Width
1C,2-7B,8,9C,11	109792	17" W LOCKING F/PLT LONG EXT HL	Long Ext 17" Footrest Width
1D,2-7C,8,9C,11	109795	18" W LOCKING F/PLT LONG EXT HL	Long Ext 18" Footrest Width
1E,2-7C,8,9C,11	109798	19" W LOCKING F/PLT LONG EXT HL	Long Ext 19" Footrest Width
1F,2-7C,8,9C,11	109801	20" W LOCKING F/PLT LONG EXT HL	Long Ext 20" Footrest Width
1G,2-7D,8,9C,11	109804	21" W LOCKING F/PLT LONG EXT HL	Long Ext 21" Footrest Width
1H,2-7D,8,9C,11	109807	22" W LOCKING F/PLT LONG EXT HL	Long Ext 22" Footrest Width
		Ship assembled part #	Use with multiple assemblies
	ASSY-HNG-FP	HANGER/FOOTPLATE ASSY REQUIRED	add with Hanger & Footplate kit
12	250070	M6 WASHER	
13	210000	M6 x 55 8.8 BUTTON HD CAP SCRW	

NOTE: only available with Adult Angle Adjustable (AAA) or Kids Angle Adjustable (KAA) Footplates.

NOTE: if retrofitting to an existing chair with Front Mount Hangers, new Adult Angle Adjustable (AAA) or Kids Angle Adjustable (KAA) Footplates with High Mount Extension Tubes are required. See Footplate Ordering Guide.

NOTE: if retrofitting to an existing chair with extension tube mounted hangers (D2 extension tubes) with Adult Angle Adjustable (AAA) or Kids Angle Adjustable (KAA) Footplates, order 2 each of 226167 and 561055 to mount the footplates onto the round high-mount extension tubes.

NOTE: if retrofitting on a chair with extension tube mounted hangers with Composite, Composite Angle Adjustable, Foam, Locking Angle Adjustable, Platform Flip-Up, or Platform Flip-Up Locking Footplates, then new Adult Angle Adjustable (AAA) or Kids Angle Adjustable (KAA) Footplates with High Mount Extension Tubes are required. See Footplate Ordering Guide.

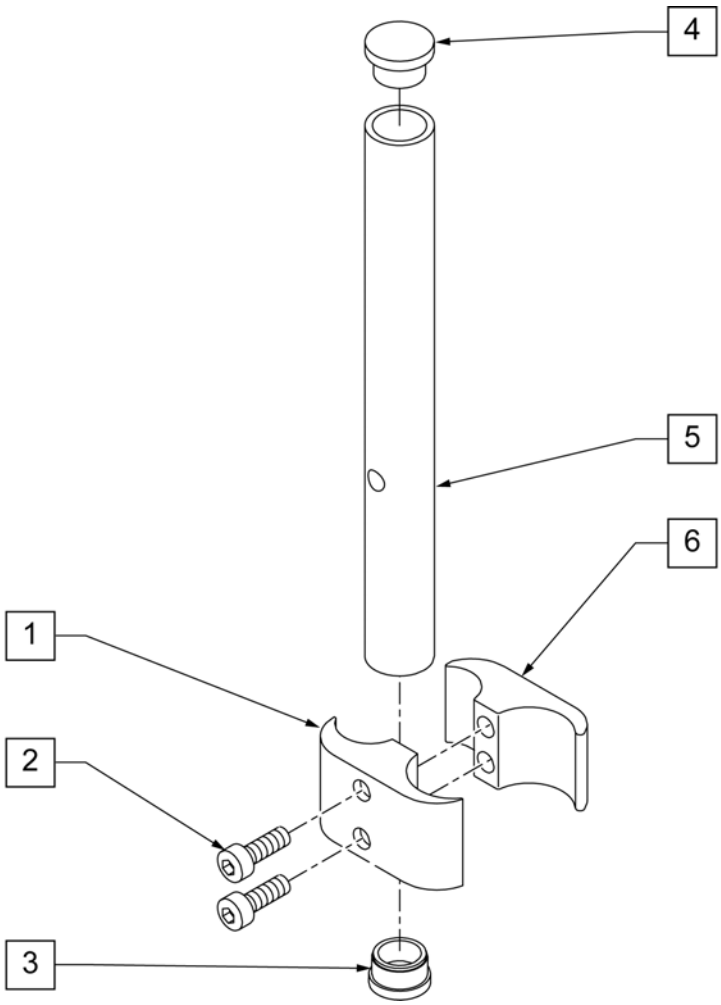

Pos.	Item Number	Description	Remarks
1	550657	CLAMP 1 1/4" RECESS FULL BLK	
2	107032	SHCS 1/4-28 X 1 ROHS	
3	561000-QU	3/4" INSERT PLUG .083	
4	482016	HIGH-MOUNT FL FT TUBE PLUG	
5	524100	H/M FL FT EXT TUBE BLK	
6	550658	CLAMP 1 1/4" THREADED BLK	
1,2,6	880538	HI-MOUNT FR CLAMP ASSEMBLY BLK	
1-6	921550S	H/M FL FT CLAMPS AND TUBES (PR)	Pair

60 DEG SWING IN/OUT HANGER

[08/20/2019]

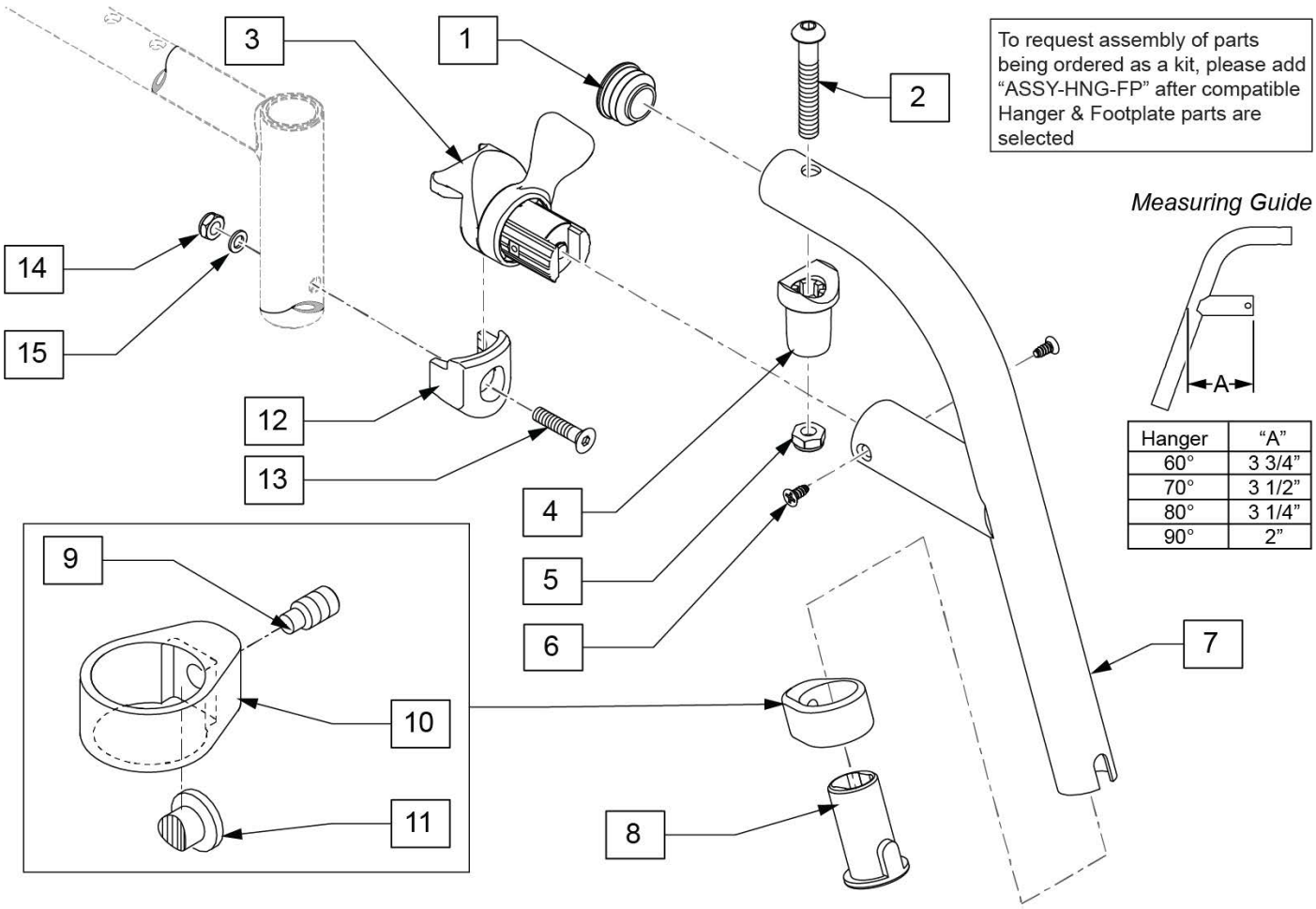

To request assembly of parts being ordered as a kit, please add "ASSY-HNG-FP" after compatible Hanger & Footplate parts are selected

Measuring Guide

Hanger	"A"
60°	3 3/4"
70°	3 1/2"
80°	3 1/4"
90°	2"

Pos.	Item Number	Description	Remarks
1	561062	1" INSERT PLUG .065 RIBS	
8	104160	BUSHING FOOTREST	
13	103500-010	FHCSM6X1X35FULLNP	
14	104381	NUT HEX NYLOCK M6X1.0	
15	104414	WAVE WASHER 6 MM	
1,2,4,5	119518	PIVOT SADDLE KIT	
3,6	119509	HANGER LATCH ASSM W/HDWR L	Left
3,6	119510	HANGER LATCH ASSM W/HDWR R	Right
1-11	122699S	60 D SWING I/O HNGR PNTD L	
1-11	122700S	60 D SWING I/O HNGR PNTD R	
8-11	107485	FOOTREST CLAMP ASSM	
12-15	119514	LATCH RECEIVER KIT	
		Ship assembled part #	Use with multiple assemblies
	ASSY-HNG-FP	HANGER/FOOTPLATE ASSY REQUIRED	add with Hanger & Footplate kit

70 DEG SWING IN/OUT HANGER

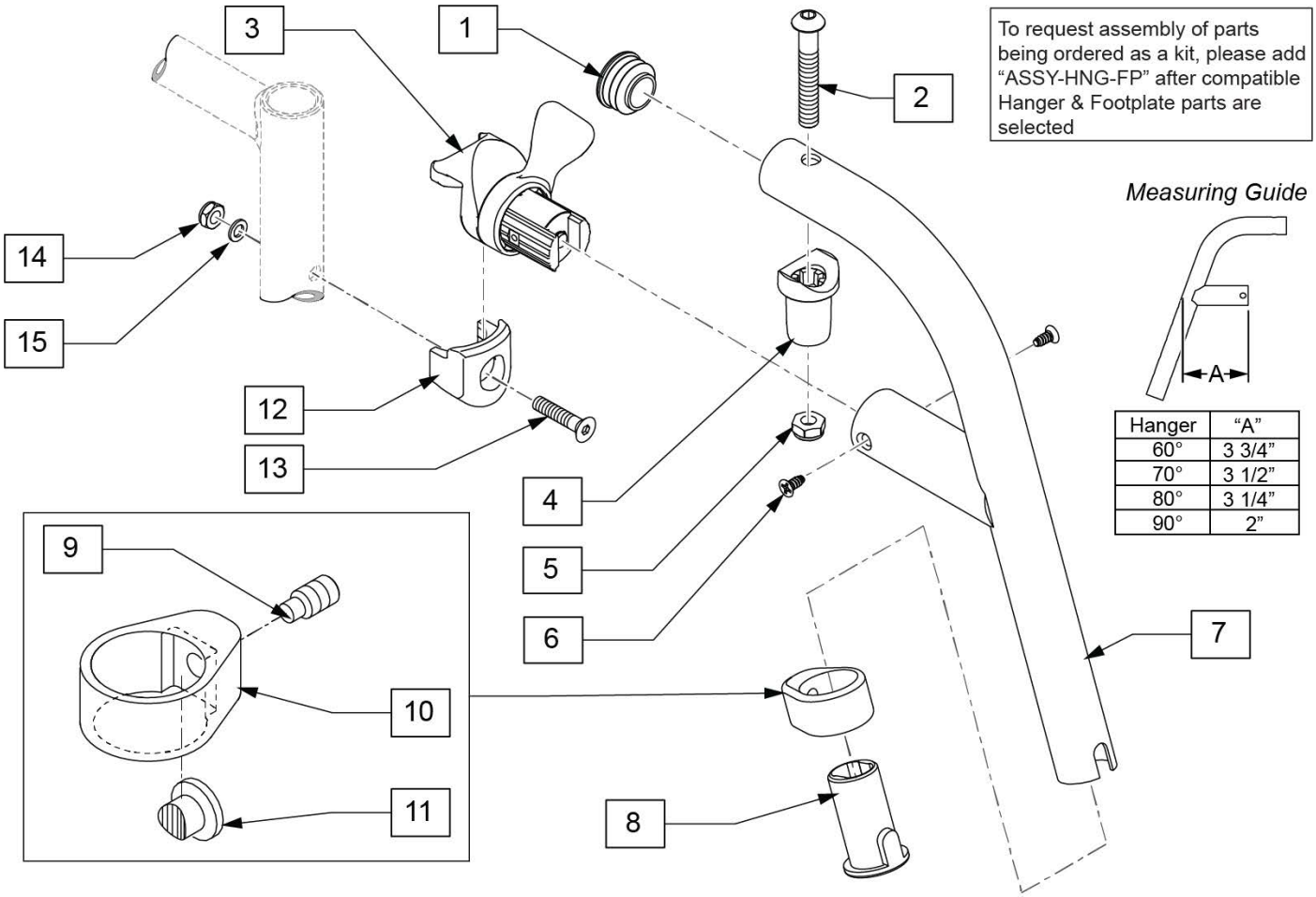

To request assembly of parts being ordered as a kit, please add "ASSY-HNG-FP" after compatible Hanger & Footplate parts are selected

Measuring Guide

Hanger	"A"
60°	3 3/4"
70°	3 1/2"
80°	3 1/4"
90°	2"

Pos.	Item Number	Description	Remarks
1	561062	1" INSERT PLUG .065 RIBS	
8	104160	BUSHING FOOTREST	
13	103500-010	FHCSM6X1X35FULLNP	
14	104381	NUT HEX NYLOCK M6X1.0	
15	104414	WAVE WASHER 6 MM	
1,2,4,5	119518	PIVOT SADDLE KIT	
3,6	119509	HANGER LATCH ASSM W/HDWR L	Left
3,6	119510	HANGER LATCH ASSM W/HDWR R	Right
1-11	119458S	70 D SWING I/O HNGR PNTD L	Left
1-11	119459S	70 D SWING I/O HNGR PNTD R	Right
8-11	107485	FOOTREST CLAMP ASSM	
12-15	119514	LATCH RECEIVER KIT	
		Ship assembled part #	Use with multiple assemblies
	ASSY-HNG-FP	HANGER/FOOTPLATE ASSY REQUIRED	add with Hanger & Footplate kit

80 DEG SWING IN/OUT HANGER

[08/20/2019]

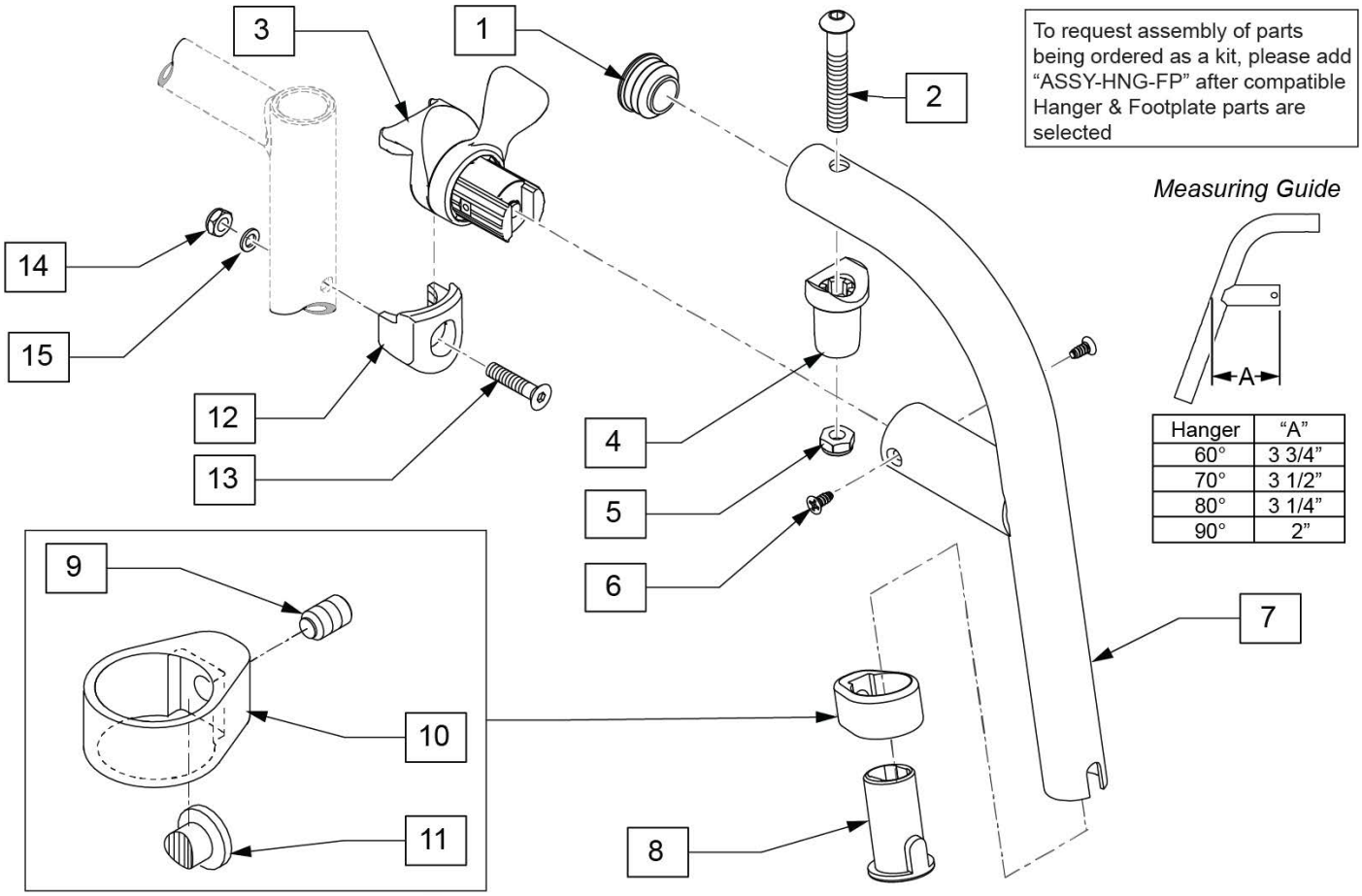

Pos.	Item Number	Description	Remarks
1	561062	1" INSERT PLUG .065 RIBS	
8	104160	BUSHING FOOTREST	
13	103500-010	FHCSM6X1X35FULLNP	
14	104381	NUT HEX NYLOCK M6X1.0	
15	104414	WAVE WASHER 6 MM	
1,2,4,5	119518	PIVOT SADDLE KIT	
3,6	119509	HANGER LATCH ASSM W/HDWR L	Left
3,6	119510	HANGER LATCH ASSM W/HDWR R	Right
1-11	119466S	80 D SWING I/O HNGR PNTD L	Left
1-11	119467S	80 D SWING I/O HNGR PNTD R	Right
8-11	107485	FOOTREST CLAMP ASSM	
12-15	119514	LATCH RECEIVER KIT	
		Ship assembled part #	Use with multiple assemblies
	ASSY-HNG-FP	HANGER/FOOTPLATE ASSY REQUIRED	add with Hanger & Footplate kit

COMPOSITE FOOTPLATE

Note: Footplate Assemblies are set to footrest width; please see "Footplate Formula" table for seat width conversion.

Note: If using Short Ext Tube & Hemi Hanger with Composite Footplate use 1G (bent) .

Note: V Style Hangers are not available on Swing Away Style chairs effective 7/14/14; see the "Prior To" ordering guide for V Style footplate assemblies.

Note: see Informations Panel for appropriate ordering guide; for QX Series or SR45 footplate replacement parts see ordering guide marked specifically for these two models.

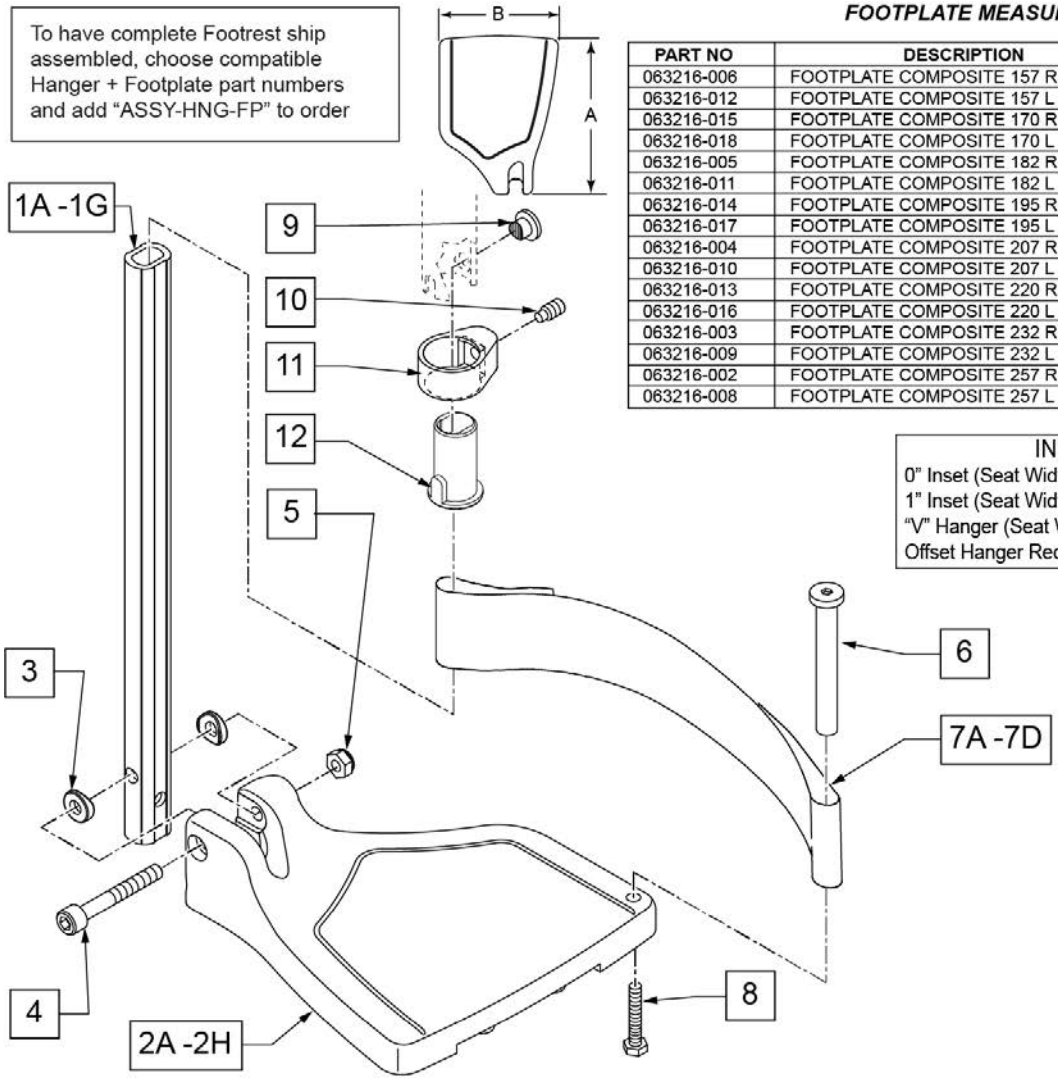

FOOTPLATE MEASURING GUIDE

PART NO	DESCRIPTION	"A"	"B"
063216-006	FOOTPLATE COMPOSITE 157 R (13"W)	6 1/8"	6"
063216-012	FOOTPLATE COMPOSITE 157 L (13"W)	6 1/8"	6"
063216-015	FOOTPLATE COMPOSITE 170 R (14"W)	6 5/8"	6"
063216-018	FOOTPLATE COMPOSITE 170 L (14"W)	6 5/8"	6"
063216-005	FOOTPLATE COMPOSITE 182 R (15"W)	7 1/8"	6"
063216-011	FOOTPLATE COMPOSITE 182 L (15"W)	7 1/8"	6"
063216-014	FOOTPLATE COMPOSITE 195 R (16"W)	7 5/8"	6"
063216-017	FOOTPLATE COMPOSITE 195 L (16"W)	7 5/8"	6"
063216-004	FOOTPLATE COMPOSITE 207 R (17"W)	8 1/8"	6"
063216-010	FOOTPLATE COMPOSITE 207 L (17"W)	8 1/8"	6"
063216-013	FOOTPLATE COMPOSITE 220 R (18"W)	8 5/8"	6 1/4"
063216-016	FOOTPLATE COMPOSITE 220 L (18"W)	8 5/8"	6 1/4"
063216-003	FOOTPLATE COMPOSITE 232 R (19-20"W)	9 1/8"	6 1/4"
063216-009	FOOTPLATE COMPOSITE 232 L (19-20"W)	9 1/8"	6 1/4"
063216-002	FOOTPLATE COMPOSITE 257 R (21-22"W)	10 1/8"	6 1/4"
063216-008	FOOTPLATE COMPOSITE 257 L (21-22"W)	10 1/8"	6 1/4"

INSET FORMULA

0" Inset (Seat Width) = Footrest Width
1" Inset (Seat Width) -2" = Footrest Width
"V" Hanger (Seat Width) -4" = Footrest Width
Offset Hanger Receiver (Seat Width) +2" = Footrest Width

Pos.	Item Number	Description	Remarks
1A,3-5	120660	SHT STRT EXT COMP HDWR	80 deg hangers + ELR only
1B,3-5	120661	MED STRT EXT COMP HDWR	80 deg hangers + ELR only
1C,3-5	120662	LNG STRT EXT COMP HDWR	80 deg hangers + ELR only
1D,3-5	120663	SHT BNT EXT COMP HDWR	60,70,70 Hemi Hangers
1E,3-5	120664	MED BNT EXT COMP HDWR	60,70,70 Hemi Hangers
1F,3-5	120665	LNG BNT EXT COMP HDWR	60,70,70 Hemi Hangers
1G	128078	TUBE FOOTREST EXT SHT HEMI	use for Hemi Ext Tube option
2A	063216-006	COMPOSITE FOOTPLATE RIGHT	RIGHT 13" Footrest Width
2A	063216-012	COMPOSITE FOOTPLATE LEFT	LEFT 13" Footrest Width
2B	063216-015	FOOTPLATE COMPOSITE RIGHT	RIGHT 14" Footrest Width
2B	063216-018	FOOTPLATE COMPOSITE LEFT	LEFT 14" Footrest Width
2C	063216-005	COMPOSITE FOOTPLATE RIGHT	RIGHT 15" Footrest Width
2C	063216-011	COMPOSITE FOOTPLATE LEFT	LEFT 15" Footrest Width
2D	063216-014	FOOTPLATE COMPOSITE RIGHT	RIGHT 16" Footrest Width
2D	063216-017	FOOTPLATE COMPOSITE LEFT	LEFT 16" Footrest Width
2E	063216-004	COMPOSITE FOOTPLATE RIGHT	RIGHT 17" Footrest Width
2E	063216-010	COMPOSITE FOOTPLATE LEFT	LEFT 17" Footrest Width
2F	063216-013	FOOTPLATE COMPOSITE RIGHT	RIGHT 18" Footrest Width
2F	063216-016	FOOTPLATE COMPOSITE LEFT	LEFT 18" Footrest Width
2G	063216-003	COMPOSITE FOOTPLATE RIGHT	RIGHT 19" & 20" Footrest Width
2G	063216-009	COMPOSITE FOOTPLATE LEFT	LEFT 19" & 20" Footrest Width
2H	063216-002	FOOTPLATE COMPOSITE RIGHT	RIGHT 21" & 22" Footrest Width
2H	063216-008	FOOTPLATE COMPOSITE LEFT	LEFT 21" & 22" Footrest Width
3	104377	3/4" SADDLE THIN	
4	103175	SHCS M6 X 1 X 40 INORG	
5	132626	NUT AUTOMATION M6 X 1.0	Inserted in bottom of footplate.
6	104328	HEEL LOOP PEG	
7A	104380-001	ADJUSTABLE FOOT REST STRAP	14" wide
7B	104380-002	ADJUSTABLE FOOT REST STRAP	15-16" wide
7C	104380-003	ADJUSTABLE FOOT REST STRAP	17-18" wide
7D	104380-004	ADJUSTABLE FOOT REST STRAP	19-22" wide
8	102268-001	HHCS M6 X 1 X 25	
12	104160	BUSHING FOOTREST	
9-12	107485	FOOTREST CLAMP ASSM	
>>>>		80 DEGREE HANGERS - SHORT EXT - RIGHT	
1A,2A,3-6,7A,8	107704	COMP STRT SHT EXT ASM 13"W R	Right- 80D- 13" W- SHORT
1A,2B,3-6,7A,8	107705	COMP STRT SHT EXT ASM 14"W R	Right- 80D- 14" W- SHORT
1A,2C,3-6,7B,8	107706	COMP STRT SHT EXT ASM 15"W R	Right- 80D- 15" W- SHORT
1A,2D,3-6,7B,8	107707	COMP STRT SHT EXT ASM 16"W R	Right- 80D- 16" W- SHORT
1A,2E,3-6,7C,8	107708	COMP STRT SHT EXT ASM 17"W R	Right- 80D- 17" W- SHORT
1A,2F,3-6,7C,8	107709	COMP STRT SHT EXT ASM 18"W R	Right- 80D- 18" W- SHORT
1A,2G,3-6,7D,8	107710	COMP STRT SHT EXT ASM 19 & 20"W R	Right- 80D- 19 & 20" W- SHORT
1A,2H,3-6,7D,8	111522	COMP STRT SHT EXT ASM 21 & 22"W R	Right- 80D- 21 & 22" W- SHORT
>>>>		80 DEGREE HANGERS - SHORT EXT - LEFT	
1A,2A,3-6,7A,8	107711	COMP STRT SHT EXT ASM 13"W L	LEFT- 80D- 13" W- SHORT
1A,2B,3-6,7A,8	107712	COMP STRT SHT EXT ASM 14"W L	LEFT- 80D- 14" W- SHORT
1A,2C,3-6,7B,8	107713	COMP STRT SHT EXT ASM 15"W L	LEFT- 80D- 15" W- SHORT
1A,2D,3-6,7B,8	107714	COMP STRT SHT EXT ASM 16"W L	LEFT- 80D- 16" W- SHORT
1A,2E,3-6,7C,8	107715	COMP STRT SHT EXT ASM 17"W L	LEFT- 80D- 17" W- SHORT
1A,2F,3-6,7C,8	107716	COMP STRT SHT EXT ASM 18"W L	LEFT- 80D- 18" W- SHORT
1A,2G,3-6,7D,8	107717	COMP STRT SHT EXT ASM 19 & 20"W L	LEFT- 80D- 19 & 20" W- SHORT
1A,2H,3-6,7D,8	111523	COMP STRT SHT EXT ASM 21 & 22"W L	LEFT- 80D- 21 & 22" W- SHORT
>>>>		80 DEGREE HANGERS - MED EXT - RIGHT	
1B,2A,3-6,7A,8	107718	COMP STRT MED EXT ASM 13"W R	Right- 80D- 13" W- MED
1B,2B,3-6,7A,8	107719	COMP STRT MED EXT ASM 14"W R	Right- 80D- 14" W- MED
1B,2C,3-6,7B,8	107720	COMP STRT MED EXT ASM 15"W R	Right- 80D- 15" W- MED

Pos.	Item Number	Description	Remarks
1B,2D,3-6,7B,8	107721	COMP STRT MED EXT ASM 16"W R	Right- 80D- 16" W- MED
1B,2E,3-6,7C,8	107722	COMP STRT MED EXT ASM 17"W R	Right- 80D- 17" W- MED
1B,2F,3-6,7C,8	107723	COMP STRT MED EXT ASM 18"W R	Right- 80D- 18" W- MED
1B,2G,3-6,7D,8	107724	COMP STRT MED EXT ASM 19 & 20"W R	Right- 80D- 19 & 20" W- MED
1B,2H,3-6,7D,8	111524	COMP STRT MED EXT ASM 21 & 22"W R	Right- 80D- 21 & 22" W- MED
>>>>		80 DEGREE HANGERS - MED EXT - LEFT	
1B,2A,3-6,7A,8	107725	COMP STRT MED EXT ASM 13"W L	LEFT- 80D- 13" W- MED
1B,2B,3-6,7A,8	107726	COMP STRT MED EXT ASM 14"W L	LEFT- 80D- 14" W- MED
1B,2C,3-6,7B,8	107727	COMP STRT MED EXT ASM 15"W L	LEFT- 80D- 15" W- MED
1B,2D,3-6,7B,8	107728	COMP STRT MED EXT ASM 16"W L	LEFT- 80D- 16" W- MED
1B,2E,3-6,7C,8	107729	COMP STRT MED EXT ASM 17"W L	LEFT- 80D- 17" W- MED
1B,2F,3-6,7C,8	107730	COMP STRT MED EXT ASM 18"W L	LEFT- 80D- 18" W- MED
1B,2G,3-6,7D,8	107731	COMP STRT MED EXT ASM 19 & 20"W L	LEFT- 80D- 19 & 20" W- MED
1B,2H,3-6,7D,8	111525	COMP STRT MED EXT ASM 21 & 22"W L	LEFT- 80D- 21 & 22" W- MED
>>>>		80 DEGREE HANGERS - LONG EXT - RIGHT	
1C,2A,3-6,7A,8	107732	COMP STRT LONG EXT ASM 13"W R	Right- 80D- 13" W- LONG
1C,2B,3-6,7A,8	107733	COMP STRT LONG EXT ASM 14"W R	Right- 80D- 14" W- LONG
1C,2C,3-6,7B,8	107734	COMP STRT LONG EXT ASM 15"W R	Right- 80D- 15" W- LONG
1C,2D,3-6,7B,8	107735	COMP STRT LONG EXT ASM 16"W R	Right- 80D- 16" W- LONG
1C,2E,3-6,7C,8	107736	COMP STRT LONG EXT ASM 17"W R	Right- 80D- 17" W- LONG
1C,2F,3-6,7C,8	107737	COMP STRT LONG EXT ASM 18"W R	Right- 80D- 18" W- LONG
1C,2G,3-6,7D,8	107738	COMP STRT LONG EXT ASM 19 & 20"W R	Right- 80D- 19 & 20" W- LONG
1C,2H,3-6,7D,8	111526	COMP STRT LONG EXT ASM 21 & 22"W R	Right- 80D- 21 & 22" W- LONG
>>>>		80 DEGREE HANGERS - LONG EXT - LEFT	
1C,2A,3-6,7A,8	107739	COMP STRT LONG EXT ASM 13"W L	LEFT- 80D- 13" W- LONG
1C,2B,3-6,7A,8	107740	COMP STRT LONG EXT ASM 14"W L	LEFT- 80D- 14" W- LONG
1C,2C,3-6,7B,8	107741	COMP STRT LONG EXT ASM 15"W L	LEFT- 80D- 15" W- LONG
1C,2D,3-6,7B,8	107742	COMP STRT LONG EXT ASM 16"W L	LEFT- 80D- 16" W- LONG
1C,2E,3-6,7C,8	107743	COMP STRT LONG EXT ASM 17"W L	LEFT- 80D- 17" W- LONG
1C,2F,3-6,7C,8	107744	COMP STRT LONG EXT ASM 18"W L	LEFT- 80D- 18" W- LONG
1C,2G,3-6,7D,8	107745	COMP STRT LONG EXT ASM 19 & 20"W L	LEFT- 80D- 19 & 20" W- LONG
1C,2H,3-6,7D,8	111527	COMP STRT LONG EXT ASM 21 & 22"W L	LEFT- 80D- 21 & 22" W- LONG
>>>>		60°,70° SHORT EXT - RIGHT	
1D,2A,3-6,7A,8	107746	COMP BNT SHT EXT ASM 13" W R	Right- 70D- 13" W- SHORT
1D,2B,3-6,7A,8	107747	COMP BNT SHT EXT ASM 14" W R	Right- 70D- 14" W- SHORT
1D,2C,3-6,7B,8	107748	COMP BNT SHT EXT ASM 15" W R	Right- 70D- 15" W- SHORT
1D,2D,3-6,7B,8	107749	COMP BNT SHT EXT ASM 16" W R	Right- 70D- 16" W- SHORT
1D,2E,3-6,7C,8	107750	COMP BNT SHT EXT ASM 17" W R	Right- 70D- 17" W- SHORT
1D,2F,3-6,7C,8	107751	COMP BNT SHT EXT ASM 18" W R	Right- 70D- 18" W- SHORT
1D,2G,3-6,7D,8	107752	COMP BNT SHT EXT ASM 19 & 20"W R	Right- 70D- 19 & 20" W- SHORT
1D,2H,3-6,7D,8	111528	COMP BNT SHT EXT ASM 21 & 22"W R	Right- 70D- 21 & 22" W- SHORT
>>>>		60°,70° - SHORT EXT - LEFT	
1D,2A,3-6,7A,8	107753	COMP BNT SHT EXT ASM 13" W L	Left- 70D- 13 W- SHORT
1D,2B,3-6,7A,8	107754	COMP BNT SHT EXT ASM 14" W L	Left- 70D- 14 W- SHORT
1D,2C,3-6,7B,8	107755	COMP BNT SHT EXT ASM 15" W L	Left- 70D- 15 W- SHORT
1D,2D,3-6,7B,8	107756	COMP BNT SHT EXT ASM 16" W L	Left- 70D- 16 W- SHORT
1D,2E,3-6,7C,8	107757	COMP BNT SHT EXT ASM 17" W L	Left- 70D- 17 W- SHORT
1D,2F,3-6,7C,8	107758	COMP BNT SHT EXT ASM 18" W L	Left- 70D- 18 W- SHORT
1D,2G,3-6,7D,8	107759	COMP BNT SHT EXT ASM 19 & 20"W L	Left- 70D- 19 & 20" W- SHORT
1D,2H,3-6,7D,8	111529	COMP BNT SHT EXT ASM 21 & 22"W L	Left- 70D- 21 & 22" W- SHORT
>>>>		60°,70°,60°&70° HEMI HANGERS - MED EXT - RIGHT	
1E,2A,3-6,7A,8	107760	COMP BNT MED EXT ASM 13" W R	Right- 70D- 13" W- MED
1E,2B,3-6,7A,8	107761	COMP BNT MED EXT ASM 14" W R	Right- 70D- 14" W- MED
1E,2C,3-6,7B,8	107762	COMP BNT MED EXT ASM 15" W R	Right- 70D- 15" W- MED
1E,2D,3-6,7B,8	107763	COMP BNT MED EXT ASM 16" W R	Right- 70D- 16" W- MED
1E,2E,3-6,7C,8	107764	COMP BNT MED EXT ASM 17" W R	Right- 70D- 17" W- MED

Pos.	Item Number	Description	Remarks
1E,2F,3-6,7C,8	107765	COMP BNT MED EXT ASM 18" W R	Right- 70D- 18" W- MED
1E,2G,3-6,7D,8	107766	COMP BNT MED EXT ASM 19 & 20"W R	Right- 70D- 19 & 20" W- MED
1E,2H,3-6,7D,8	111530	COMP BNT MED EXT ASM 21 & 22"W R	Right- 70D- 21 & 22" W- MED
>>>>		60°,70°,60°&70° HEMI HANGERS - MED EXT - LEFT	
1E,2A,3-6,7A,8	107767	COMP BNT MED EXT ASM 13" W L	Left- 70D- 13 W- MED
1E,2B,3-6,7A,8	107768	COMP BNT MED EXT ASM 14" W L	Left- 70D- 14 W- MED
1E,2C,3-6,7B,8	107769	COMP BNT MED EXT ASM 15" W L	Left- 70D- 15 W- MED
1E,2D,3-6,7B,8	107770	COMP BNT MED EXT ASM 16" W L	Left- 70D- 16 W- MED
1E,2E,3-6,7C,8	107771	COMP BNT MED EXT ASM 17" W L	Left- 70D- 17 W- MED
1E,2F,3-6,7C,8	107772	COMP BNT MED EXT ASM 18" W L	Left- 70D- 18 W- MED
1E,2G,3-6,7D,8	107773	COMP BNT MED EXT ASM 19 & 20"W L	Left- 70D- 19 & 20" W- MED
1E,2H,3-6,7D,8	111531	COMP BNT MED EXT ASM 21 & 22"W L	Left- 70D- 21 & 22" W- MED
>>>>		60°,70°,60°&70° HEMI HANGERS - LONG EXT - RIGHT	
1F,2A,3-6,7A,8	107774	COMP BNT LONG EXT ASM 13" W R	Right- 70D- 13" W- LONG
1F,2B,3-6,7A,8	107775	COMP BNT LONG EXT ASM 14" W R	Right- 70D- 14" W- LONG
1F,2C,3-6,7B,8	107776	COMP BNT LONG EXT ASM 15" W R	Right- 70D- 15" W- LONG
1F,2D,3-6,7B,8	107777	COMP BNT LONG EXT ASM 16" W R	Right- 70D- 16" W- LONG
1F,2E,3-6,7C,8	107778	COMP BNT LONG EXT ASM 17" W R	Right- 70D- 17" W- LONG
1F,2F,3-6,7C,8	107779	COMP BNT LONG EXT ASM 18" W R	Right- 70D- 18" W- LONG
1F,2G,3-6,7D,8	107780	COMP BNT LONG EXT ASM 19 & 20"W R	Right- 70D- 19 & 20" W- LONG
1F,2H,3-6,7D,8	111532	COMP BNT LONG EXT ASM 21 & 22"W R	Right- 70D- 21 & 22" W- LONG
>>>>		60°,70°,60°&70° HEMI HANGERS - LONG EXT - LEFT	
1F,2A,3-6,7A,8	107781	COMP BNT LONG EXT ASM 13" W L	Left- 70D- 13 W- LONG
1F,2B,3-6,7A,8	107782	COMP BNT LONG EXT ASM 14" W L	Left- 70D- 14 W- LONG
1F,2C,3-6,7B,8	107783	COMP BNT LONG EXT ASM 15" W L	Left- 70D- 15 W- LONG
1F,2D,3-6,7B,8	107784	COMP BNT LONG EXT ASM 16" W L	Left- 70D- 16 W- LONG
1F,2E,3-6,7C,8	107785	COMP BNT LONG EXT ASM 17" W L	Left- 70D- 17 W- LONG
1F,2F,3-6,7C,8	107786	COMP BNT LONG EXT ASM 18" W L	Left- 70D- 18 W- LONG
1F,2G,3-6,7D,8	107787	COMP BNT LONG EXT ASM 19 & 20"W L	Left- 70D- 19 & 20" W- LONG
1F,2H,3-6,7D,8	111533	COMP BNT LONG EXT ASM 21 & 22"W L	Left- 70D- 21 & 22" W- LONG
>>>>		60°&70° HEMI HANGER SHORT EXT- RIGHT	
1G,2A,3-6,7A,8	129724	CMP FT BNT KIT SHT HNGR 13W R	Right-Hemi-13W; add Ext behind the Hemi
1G,2B,3-6,7A,8	129726	CMP FT BNT KIT SHT HNGR 14W R	Right-Hemi-14W; add Ext behind the Hemi
1G,2C,3-6,7B,8	129728	CMP FT BNT KIT SHT HNGR 15W R	Right-Hemi-15W; add Ext behind the Hemi
1G,2D,3-6,7B,8	129730	CMP FT BNT KIT SHT HNGR 16W R	Right-Hemi-16W; add Ext behind the Hemi
1G,2E,3-6,7C,8	129732	CMP FT BNT KIT SHT HNGR 17W R	Right-Hemi-17W; add Ext behind the Hemi
1G,2F,3-6,7C,8	129734	CMP FT BNT KIT SHT HNGR 18W R	Right-Hemi-18W; add Ext behind the Hemi
1G,2G,3-6,7D,8	129736	CMP FT BNT KIT SHT HNGR 19-20W R	Right-Hemi-19-20W; add Ext behind the Hemi
1G,2H,3-6,7D,8	129738	CMP FT BNT KIT SHT HNGR 21-22W R	Right-Hemi-21-22W; add Ext behind the Hemi
>>>>		60°&70° HEMI HANGER SHORT EXT- LEFT	
1G,2A,3-6,7A,8	129725	CMP FT BNT KIT SHT HNGR 13W L	Left-Hemi-13W; add Ext behind the Hemi
1G,2B,3-6,7A,8	129727	CMP FT BNT KIT SHT HNGR 14W L	Left-Hemi-14W; add Ext behind the Hemi
1G,2C,3-6,7B,8	129729	CMP FT BNT KIT SHT HNGR 15W L	Left-Hemi-15W; add Ext behind the Hemi
1G,2D,3-6,7B,8	129731	CMP FT BNT KIT SHT HNGR 16W L	Left-Hemi-16W; add Ext behind the Hemi
1G,2E,3-6,7C,8	129733	CMP FT BNT KIT SHT HNGR 17W L	Left-Hemi-17W; add Ext behind the Hemi
1G,2F,3-6,7C,8	129735	CMP FT BNT KIT SHT HNGR 18W L	Left-Hemi-18W; add Ext behind the Hemi
1G,2G,3-6,7D,8	129737	CMP FT BNT KIT SHT HNGR 19-20W L	Left-Hemi-19-20W; add Ext behind the Hemi
1G,2H,3-6,7D,8	129739	CMP FT BNT KIT SHT HNGR 21-22W L	Left-Hemi-21-22W; add Ext behind the Hemi
		Ship assembled part #	Use with multiple assemblies
	ASSY-HNG-FP	HANGER/FOOTPLATE ASSY REQUIRED	add with Hanger & Footplate kit

ADULT ALUMINUM ANGLE-ADJ FOOTPLATE EXT MOUNT

Note: Footplate Assemblies are set to footrest width; please see "Footplate Formula" table for seat width conversion.

Note: If using Short Ext Tube & Hemi Hanger with Adult Angle Adjustable Footplate use 1D (straight) .

Note: V Style Hangers are not available on Swing Away Style chairs effective 7/14/14; see the "Prior To" ordering guide for V Style footplate assemblies.

Note: for QX Series or SR45 footplate replacement parts see the ordering guide marked specifically for these two models in the informations panel.

Note: if chair has High Mount Ext Tubes or if switching to High Mount Ext Tubes, see AAA Footplate w/ High Mount Extension Ordering Guide.

To have complete Footrest ship assembled, choose compatible Hanger + Footplate part numbers and add "ASSY-HNG-FP" to order

ADD INSET FORMULA
0" Inset (Seat Width) = Footrest Width
1" Inset (Seat Width) -2" = Footrest Width
2" Inset (Seat Width) -4" = Footrest Width
"V" Hanger (Seat Width) -4" = Footrest Width
Offset Hanger Receiver (Seat Width) +2" = Footrest Width
Flared Frame (Seat Width) = 2" = Footrest Width

MEASURING GUIDE

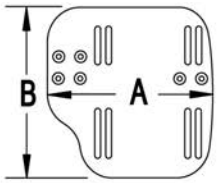

CHAIR WIDTH	"A"	"B"
10" - 11"	3 1/2"	7 1/4"
12" - 13"	4 1/2"	7 3/4"
14" - 15"	5 1/2"	7 3/4"
16" - 17"	6 1/2"	7 3/4"
18" - 20"	7 1/2"	7 3/4"

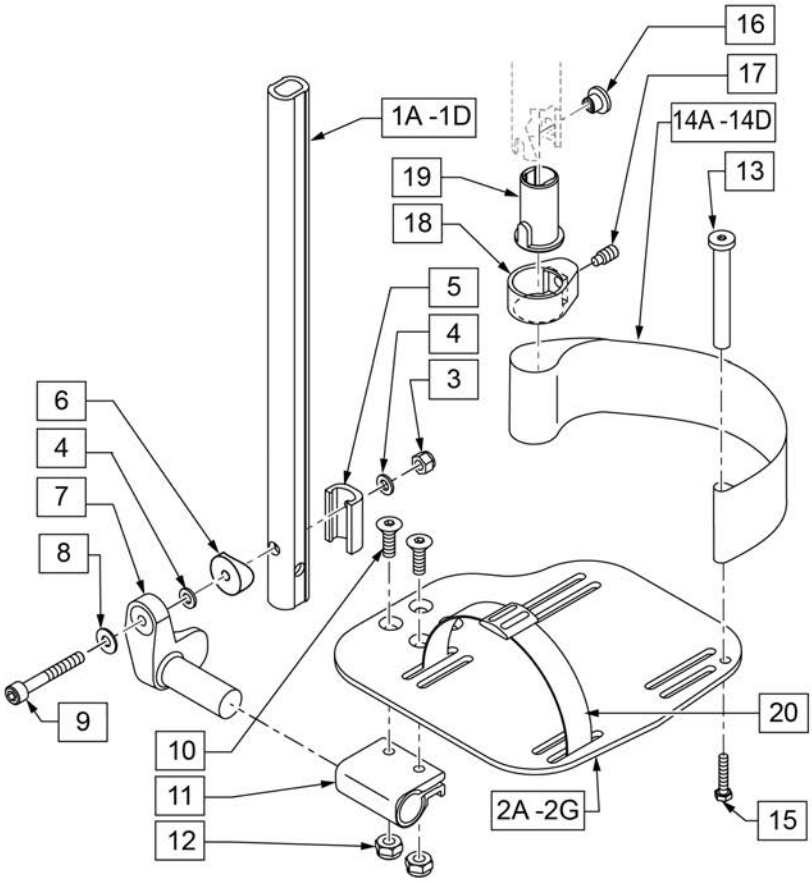

21 EXT MNT HARDWARE 1 SIDE

ITEM #	ILLUSTRATION	DESCRIPTION	QTY
3		NUT AUTOMATION M6 X 1.0 ROHS	1
4		WASHER FLAT THIN AN 1/4	2
5		HANGER EXTENSION SADDLE	1
6		3/4" SADDLE 1" OD	1
8		WASHER FLAT SAE 1/4 ROHS	1
9		SHCS M6X1X45 12MM PART THD	1

Pos.	Item Number	Description	Remarks
1A,3-6,8,9	120670	SHT STRT EXT AAA HDWR	
1B,3-6,8,9	120671	MED STRT EXT AAA HDWR	
1C,3-6,8,9	120672	LNG STRT EXT AAA HDWR	
1D	128079	TUBE FTRST EXT STRGHT SHT HEMI	Use for Hemi Ext Tube option
2A	500656	ADULT ANG ADJ F/PLT 10/11" R	RIGHT 10-11" Footrest Width
2A	500657	ADULT ANG ADJ F/PLT 10/11" L	LEFT 10-11" Footrest Width
2B	500658	ADULT ANG ADJ F/PLT 12/13" R	RIGHT 12-13" Footrest Width
2B	500659	ADULT ANG ADJ F/PLT 12/13" L	LEFT 12-13" Footrest Width
2C	500660	ADLT ANGL ADJ F/PLT 14/15	RIGHT 14-15" Footrest Width
2C	500661	ADLT ANGL ADJ F/PLT 14/15	LEFT 14-15" Footrest Width
2D	500662	ADLT ANGL ADJ F/PLT 16/17	RIGHT 16-17" Footrest Width
2D	500663	ADLT ANGL ADJ F/PLT 16/17	LEFT 16-17" Footrest Width
2E	500664	ADLT ANGL ADJ F/PLT 18-20	RIGHT 18-22" Footrest Width
2E	500665	ADLT ANGL ADJ F/PLT 18-20	LEFT 18-22" Footrest Width
3	132626	NUT AUTOMATION M6 X 1.0	
4	106944	WASHER FLAT THIN AN 1/4 ROHS	
5	107199	HANGER EXTENSION SADDLE	
6	561055	3/4" SADDLE 1" OD	
7	541002	FTRST MOUNTING BRKT-3/8 RAD R	RIGHT

Pos.	Item Number	Description	Remarks
7	541003	FTRST MOUNTING BRKT-3/8 RAD L	LEFT
8	106945	WASHER FLAT SAE 1/4 ROHS	
9	104399	SHCS M6X1X45 12 MM PART THD	
10	106978	FHCS 1/4-28 X 7/8 ROHS	
11	550350	3/4" CLMP ADJ FT PLT	
12	106935	NUT NYLOCK THIN 1/4-28 ROHS	
13	104328	POST HEEL LOOP	
14A	104380-001	ADJUSTABLE FOOT REST STRAP	12 - 14" WIDE
14B	104380-002	ADJUSTABLE FOOT REST STRAP	15 - 16" WIDE
14C	104380-003	ADJUSTABLE FOOT REST STRAP	17 - 18" WIDE
14D	104380-004	ADJUSTABLE FOOT REST STRAP	19 - 20" WIDE
15	102268-001	HHCS M6 X 1 X 25	
16-19	107485	FOOTREST CLAMP ASSM	
20	740260	TOE-ANKLE STRAP ADJ ADULT FOOTPLATE	
21	120659	EXT MNT HARDWARE 1 SIDE	
>>>>		60,70,80 STD HANGERS - RIGHT	
1A,2B,3-14A,15	111534	AAA STRT SHT EXT ASM 12-13" W R	Right- 12-13" W- SHORT
1A,2C,3-14B,15	107928	AAA STRT SHT EXT ASM 14-15" W R	Right- 14-15" W- SHORT
1A,2D,3-14C,15	107930	AAA STRT SHT EXT ASM 16-17" W R	Right- 16-17" W- SHORT
1A,2E,3-14D,15	107932	AAA STRT SHT EXT ASM 18-22" W R	Right- 18-22" W- SHORT
>>>>		60,70,80 STD HANGERS - LEFT	
1A,2B,3-14A,15	111535	AAA STRT SHT EXT ASM 12-13" W L	Left- 12-13" W- SHORT
1A,2C,3-14B,15	107935	AAA STRT SHT EXT ASM 14" W L	Left- 14-15" W- SHORT
1A,2D,3-14C,15	107937	AAA STRT SHT EXT ASM 16" W L	Left- 16-17" W- SHORT
1A,2E,3-14D,15	107939	AAA STRT SHT EXT ASM 18" W L	Left- 18-22" W- SHORT
>>>>		60,70,80 & 60,70 HEMI HANGERS - RIGHT	
1B,2B,3-14A,15	111536	AAA STRT MED EXT ASM 12-13" W R	Right- 12-13" W- MED
1B,2C,3-14B,15	107942	AAA STRT MED EXT ASM 14-15" W R	Right- 14-15" W- MED
1B,2D,3-14C,15	107944	AAA STRT MED EXT ASM 16-17" W R	Right- 16-17" W- MED
1B,2E,3-14D,15	107946	AAA STRT MED EXT ASM 18-22" W R	Right- 18-22" W- MED
>>>>		60,70,80 & 60,70 HEMI HANGERS - LEFT	
1B,2B,3-14A,15	111537	AAA STRT MED EXT ASM 12-13" W L	Left- 12-13" W- MED
1B,2C,3-14B,15	107949	AAA STRT MED EXT ASM 14" W L	Left- 14-15" W- MED
1B,2D,3-14C,15	107951	AAA STRT MED EXT ASM 16" W L	Left- 16-17" W- MED
1B,2E,3-14D,15	107953	AAA STRT MED EXT ASM 18" W L	Left- 18-22" W- MED
>>>>		60,70,80 & 60,70 HEMI HANGERS - RIGHT	
1C,2B,3-14A,15	111538	AAA STRT LNG EXT ASM 12-13" W R	Right- 12-13" W- LONG
1C,2C,3-14B,15	107956	AAA STRT LNG EXT ASM 14 -15" W R	Right- 14-15" W- LONG
1C,2D,3-14C,15	107958	AAA STRT LNG EXT ASM 16 -17" W R	Right- 16-17" W- LONG
1C,2E,3-14D,15	107960	AAA STRT LNG EXT ASM 18 -22" W R	Right- 18-22" W- LONG
>>>>		60,70,80 & 60,70 HEMI HANGERS - LEFT	
1C,2B,3-14A,15	111539	AAA STRT LNG EXT ASM 12-13" W L	Left- 12-13" W- LONG
1C,2C,3-14B,15	107963	AAA STRT LNG EXT ASM 14W L	Left- 14-15" W- LONG
1C,2D,3-14C,15	107965	AAA STRT LNG EXT ASM 16W L	Left- 16-17" W- LONG
1C,2E,3-14D,15	107968	AAA STRT LNG EXT ASM 18W L	Left- 18-22" W- LONG
>>>>		60&70 HEMI HANGERS - SHORT EXT - RIGHT	
1D,2B,3-14A,15	129756	AAA FOOT KIT SHT HNGR 12W R	Right- 12-13" W- SHORT; add Ext behind the Hemi
1D,2C,3-14B,15	129758	AAA FOOT KIT SHT HNGR 14W R	Right- 14-15" W- SHORT; add Ext behind the Hemi
1D,2D,3-14C,15	129760	AAA FOOT KIT SHT HNGR 16W R	Right- 16-17" W- SHORT; add Ext behind the Hemi
1D,2E,3-14D,15	129762	AAA FOOT KIT SHT HNGR 18W R	Right- 18-22" W- SHORT; add Ext behind the Hemi
>>>>		60&70 HEMI HANGERS - SHORT EXT -LEFT	
1D,2B,3-14A,15	129757	AAA FOOT KIT SHT HNGR 12W L	Left- 12-13" W-SHORT; add Ext behind the Hemi
1D,2C,3-14B,15	129759	AAA FOOT KIT SHT HNGR 14W L	Left- 14-15" W- SHORT; add Ext behind the Hemi
1D,2D,3-14C,15	129761	AAA FOOT KIT SHT HNGR 16W L	Left- 16-17" W- SHORT; add Ext behind the Hemi
1D,2E,3-14D,15	129763	AAA FOOT KIT SHT HNGR 18W L	Left- 18-22" W- SHORT; add Ext behind the Hemi
		Ship assembled part #	Use with multiple assemblies

Pos.	Item Number	Description	Remarks
	ASSY-HNG-FP	HANGER/FOOTPLATE ASSY REQUIRED	add with Hanger & Footplate kit

PLATFORM FLIP-UP FOOTPLATE

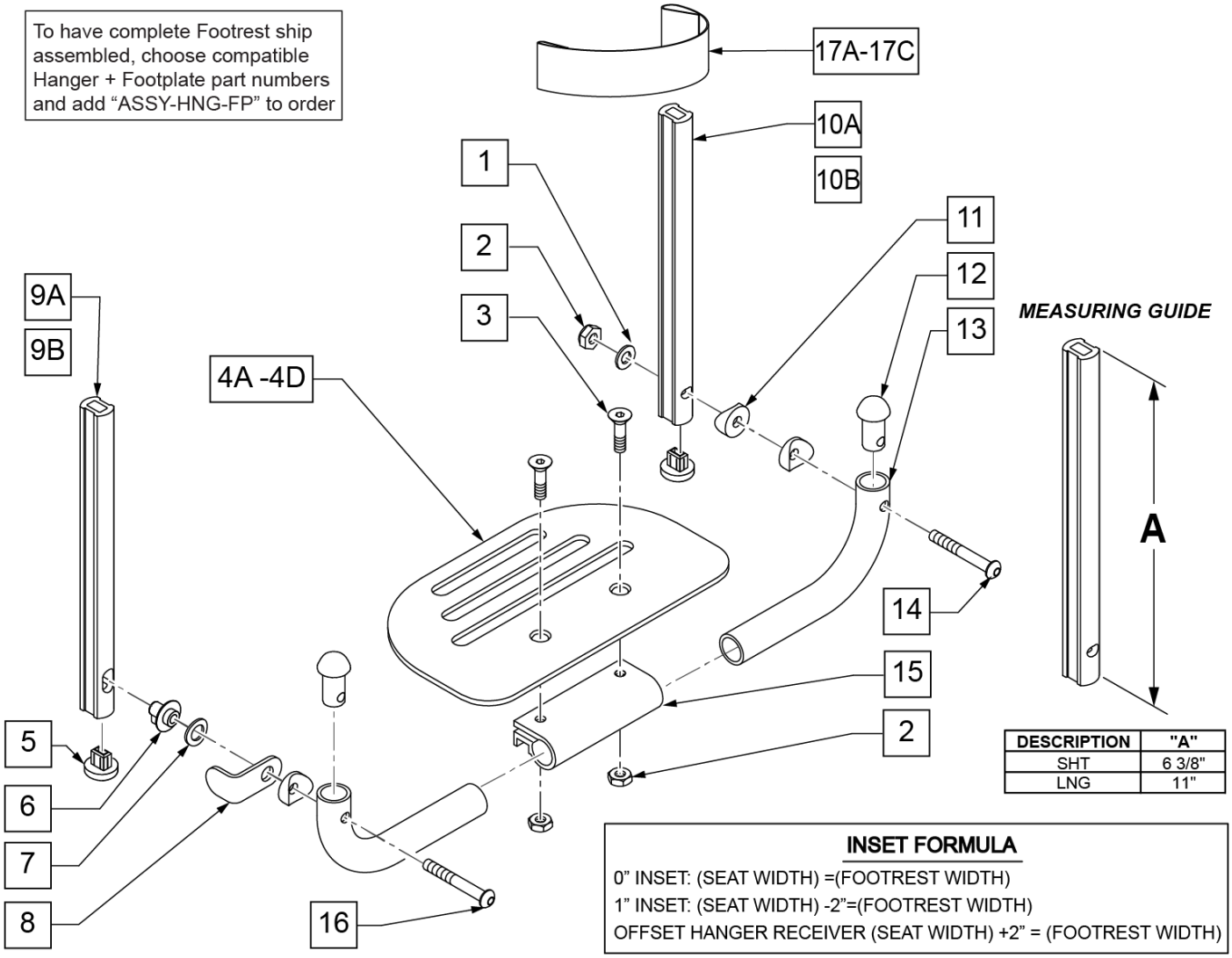

DESCRIPTION	"A"
SHT	6 3/8"
LNG	11"

Pos.	Item Number	Description	Remarks
1	106944	WASHER FLAT THIN AN 1/4 ROHS	
2	106941	NUT AUTOMATION 1/4-28 ROHS	
3	106978	FHCS 1/4-28 X 7/8 ROHS	
4A	500651	PLATFORM F/PLT 8 x 5 1/2"	12 -14" Footrest Width
4B	500652	PLATFORM F/PLT 10" x 5 1/2"	15 -17" Footrest Width
4C	500653	PLATFORM F/PLT 12" x 5 1/2"	18 -20" Footrest Width
4D	500654	PLATFORM F/PLT 14" x 5 1/2	21 -22" Footrest Width
5	113221	PLUG DOUBLE D EXT TUBE	
6	540410	F/UP FOOTREST KEY STUD D2	
7	107385	WASHER CURVED 3/8 ROHS	
8	505078	FOOTREST RETAINING BRACKET	
9A	106875	EXT TBE F/UP KEY SHT	Short -Latch Side
9B	106876	EXT TBE F/UP KEY LNG	Long -Latch Side
10A	106873	EXT TBE F/UP SLT SHT	Short -Pivot Side
10B	106874	EXT TBE F/UP SLT LNG	Long -Pivot Side
11	561003	3/4" SADDLE THIN	
12	561034	SHORT DOME PLUG	

Pos.	Item Number	Description	Remarks
14	106964	BHCS 1/4-28 X 2 ROHS	
15	550351	PLATFORM FOOTPLATE CLAMP	
16	107027	BHCS 1/4-28 X 1-1/4 SHLDR ROHS	
17A	740130	LEG STRAP 10"-14" BLK	12-14" Footrest Width
17B	740131	LEG STRAP 15"-17" BLK	15-17" Footrest Width
17C	740132	LEG STRAP 18"-20" BLK	18-20" Footrest Width
1-4A,6-8,11-16	900306	PLTFM F/P PLT BLK 12" D2 W/ INSTR	12" Footrest Width
1-4A,6-8,11-16	900307	PLTFM F/P PLT BLK 13" D2 W/ INSTR	13" Footrest Width
1-4A,6-8,11-16	900308	PLTFM F/P PLT BLK 14" D2 W /INSTR	14" Footrest Width
1-4B,6-8,11-16	900309	PLTFM F/P PLT BLK 15" D2 W /INSTR	15" Footrest Width
1-4B,6-8,11-16	900310	PLTFM F/P PLT BLK 16" D2 W /INSTR	16" Footrest Width
1-4B,6-8,11-16	900311	PLTFM F/P PLT BLK 17" D2 W /INSTR	17" Footrest Width
1-4C,6-8,11-16	900312	PLTFM F/P PLT BLK 18" D2 W /INSTR	18" Footrest Width
1-4C,6-8,11-16	900313	PLTFM F/P PLT BLK 19" D2 W /INSTR	19" Footrest Width
1-4C,6-8,11-16	900314	PLTFM F/P PLT BLK 20" D2 W/ INSTR	20" Footrest Width
1-4D,6-8,11-16	900315	PLTFM F/P PLT BLK 21" D2 W/ INSTR	21" Footrest Width
1-4D,6-8,11-16	900316	PLTFM F/P PLT BLK 22" D2 W/ INSTR	22" Footrest Width
		SHORT EXT ASSEMBLIES	
1-3,4A,5-8,9A,10B,11-16,17A	108043	PLTFRM FLIP FTRST SHT 12W	12" wide (Short)
1-3,4A,5-8,9A,10B,11-16,17A	108044	PLTFRM FLIP FTRST SHT 13W	13" wide (Short)
1-3,4A,5-8,9A,10B,11-16,17A	108045	PLTFRM FLIP FTRST SHT 14W	14" wide (Short)
1-3,4B,5-8,9A,10B,11-16,17B	108046	PLTFRM FLIP FTRST SHT 15W	15" wide (Short)
1-3,4B,5-8,9A,10B,11-16,17B	108047	PLTFRM FLIP FTRST SHT 16W	16" wide (Short)
1-3,4B,5-8,9A,10B,11-16,17B	108048	PLTFRM FLIP FTRST SHT 17W	17" wide (Short)
1-3,4C,5-8,9A,10B,11-16,17C	108049	PLTFRM FLIP FTRST SHT 18W	18" wide (Short)
1-3,4C,5-8,9A,10B,11-16,17C	108051	PLTFRM FLIP FTRST SHT 19W	19" wide (Short)
1-3,4C,5-8,9A,10B,11-16,17C	108052	PLTFRM FLIP FTRST SHT 20W	20" wide (Short)
1-3,4D,5-8,9A,10B,11-16,17C	111554	PLTFRM FLIP FTRST SHT 21W	21" wide (Short)
1-3,4D,5-8,9A,10B,11-16,17C	111555	PLTFRM FLIP FTRST SHT 22W	22" wide (Short)
		LONG EXT ASSEMBLIES	
1-3,4A,5-8,9B,10A,11-16,17A	108053	PLTFRM FLIP FTRST LONG 12W	12" wide (Long)
1-3,4A,5-8,9B,10A,11-16,17A	108054	PLTFRM FLIP FTRST LONG 13W	13" wide (Long)
1-3,4A,5-8,9B,10A,11-16,17A	108055	PLTFRM FLIP FTRST LONG 14W	14" wide (Long)
1-3,4B,5-8,9B,10A,11-16,17B	108056	PLTFRM FLIP FTRST LONG 15W	15" wide (Long)
1-3,4B,5-8,9B,10A,11-16,17B	108057	PLTFRM FLIP FTRST LONG 16W	16" wide (Long)
1-3,4B,5-8,9B,10A,11-16,17B	108058	PLTFRM FLIP FTRST LONG 17W	17" wide (Long)
1-3,4C,5-8,9B,10A,11-16,17C	108059	PLTFRM FLIP FTRST LONG 18W	18" wide (Long)
1-3,4C,5-8,9B,10A,11-16,17C	108060	PLTFRM FLIP FTRST LONG 19W	19" wide (Long)
1-3,4C,5-8,9B,10A,11-16,17C	108061	PLTFRM FLIP FTRST LONG 20W	20" wide (Long)
1-3,4D,5-8,9B,10A,11-16,17C	111556	PLTFRM FLIP FTRST LONG 21W	21" wide (Long)
1-3,4D,5-8,9B,10A,11-16,17C	111557	PLTFRM FLIP FTRST LONG 22W	22" wide (Long)
		Ship assembled part #	Use with multiple assemblies
	ASSY-HNG-FP	HANGER/FOOTPLATE ASSY REQUIRED	add with Hanger & Footplate kit

COMPOSITE ANGLE ADJUSTABLE FOOT PLATE

Note: Footplate Assemblies are set to footrest width; please see "Footplate Formula" table for seat width conversion.

Note: If using Short Ext Tube & Hemi Hanger with Composite Angle Adjustable Footplate use 1D (straight) .

Note: V Style Hangers are not available on Swing Away Style chairs effective 7/14/14; see the "Prior To" ordering guide for V Style footplate assemblies.

To have complete Footrest ship assembled, choose compatible Hanger + Footplate part numbers and add “ASSY-HNG-FP” to order

ADD INSET FORMULA
0” Inset (Seat Width) = Footrest Width
1” Inset (Seat Width) -2” = Footrest Width
2” Inset (Seat Width) -4” = Footrest Width
“V” Hanger (Seat Width) -4” = Footrest Width
Offset Hanger Receiver (Seat Width) +2” = Footrest Width
Flared Frame (Seat Width) = 2” = Footrest Width

FOOTPLATE MEASURING GUIDE

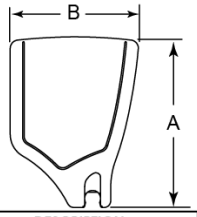

PART NO	DESCRIPTION	DIM -A-	DIM -B-
063216-006	FOOTPLATE COMPOSITE 157 R	6 1/8"	6"
063216-012	FOOTPLATE COMPOSITE 157 L	6 1/8"	6"
063216-015	FOOTPLATE COMPOSITE 170 R	6 5/8"	6"
063216-018	FOOTPLATE COMPOSITE 170 L	6 5/8"	6"
063216-005	FOOTPLATE COMPOSITE 182 R	7 1/8"	6"
063216-011	FOOTPLATE COMPOSITE 182 L	7 1/8"	6"
063216-014	FOOTPLATE COMPOSITE 195 R	7 5/8"	6"
063216-017	FOOTPLATE COMPOSITE 195 L	7 5/8"	6"
063216-004	FOOTPLATE COMPOSITE 207 R	8 1/8"	6"
063216-010	FOOTPLATE COMPOSITE 207 L	8 1/8"	6"
063216-013	FOOTPLATE COMPOSITE 220 R	8 5/8"	6 1/4"
063216-016	FOOTPLATE COMPOSITE 220 L	8 5/8"	6 1/4"
063216-003	FOOTPLATE COMPOSITE 232 R	9 1/8"	6 1/4"
063216-009	FOOTPLATE COMPOSITE 232 L	9 1/8"	6 1/4"
063216-002	FOOTPLATE COMPOSITE 257 R	10 1/8"	6 1/4"
063216-008	FOOTPLATE COMPOSITE 257 L	10 1/8"	6 1/4"
063216-001	FOOTPLATE COMPOSITE 282 R	11 1/8"	6 1/4"
063216-007	FOOTPLATE COMPOSITE 282 L	11 1/8"	6 1/4"

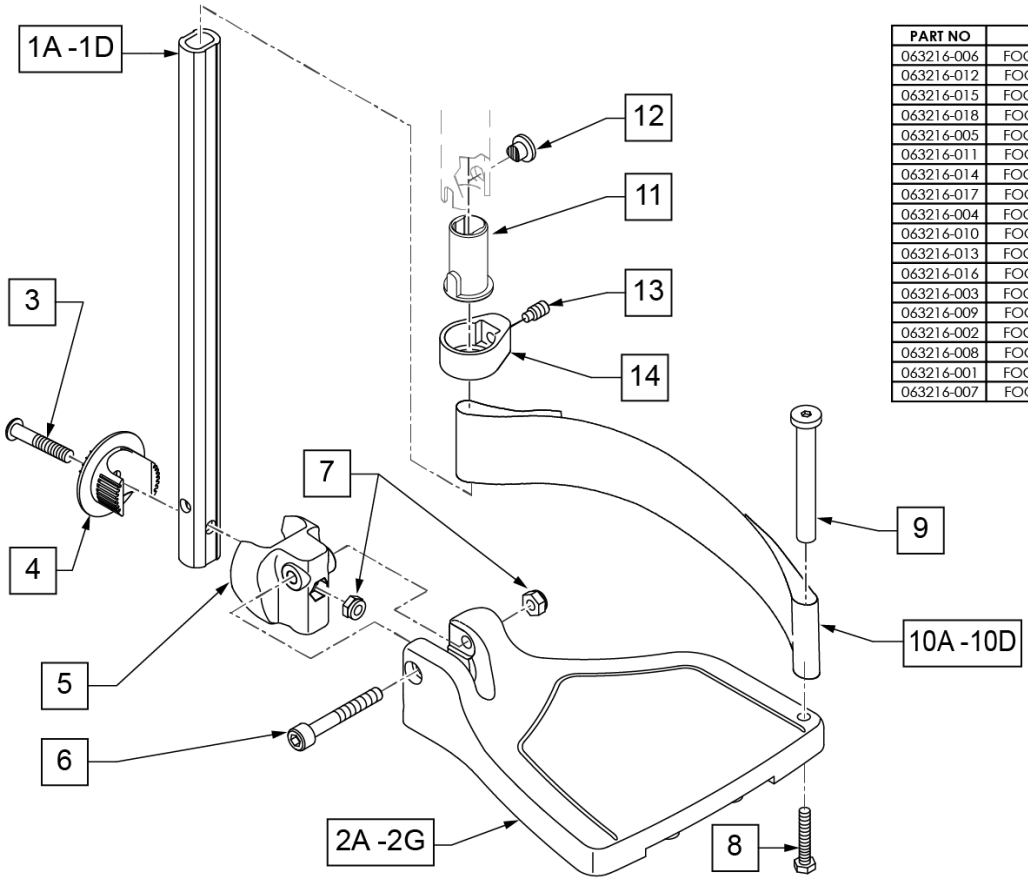

Pos.	Item Number	Description	Remarks
1A,6,7	120660	SHT STRT EXT COMP HDWR	
1B,6,7	120661	MED STRT EXT COMP HDWR	
1C,6,7	120662	LNG STRT EXT COMP HDWR	
1D	128079	TUBE FTRST EXT STRGHT SHT HEMI	Use for Hemi Ext Tube option
2A	063216-006	COMPOSITE FOOTPLATE RIGHT	RIGHT 15" Footrest Width

Pos.	Item Number	Description	Remarks
2A	063216-012	COMPOSITE FOOTPLATE LEFT	LEFT 15" Footrest Width
2B	063216-015	COMPOSITE FOOTPLATE RIGHT	RIGHT 16" Footrest Width
2B	063216-018	COMPOSITE FOOTPLATE LEFT	LEFT 16" Footrest Width
2C	063216-005	COMPOSITE FOOTPLATE RIGHT	RIGHT 17" Footrest Width
2C	063216-011	COMPOSITE FOOTPLATE LEFT	LEFT 17" Footrest Width
2D	063216-014	COMPOSITE FOOTPLATE RIGHT	RIGHT 18" Footrest Width
2D	063216-017	COMPOSITE FOOTPLATE LEFT	LEFT 18" Footrest Width
2E	063216-004	COMPOSITE FOOTPLATE RIGHT	RIGHT 19" Footrest Width
2E	063216-010	COMPOSITE FOOTPLATE LEFT	LEFT 19" Footrest Width
2F	063216-013	COMPOSITE FOOTPLATE RIGHT	RIGHT 20" Footrest Width
2F	063216-016	COMPOSITE FOOTPLATE LEFT	LEFT 20" Footrest Width
2G	063216-003	COMPOSITE FOOTPLATE RIGHT	RIGHT 21" & 22" Footrest Width
2G	063216-009	COMPOSITE FOOTPLATE LEFT	LEFT 21" & 22" Footrest Width
3	108233	BHCS M6 X 1 X 40	
4	054242	ANGLE COVER	
5	054241	ANGLE SEGMENT	
6	103175	SHCS M6 X 1 X 40 INORG	
7	132626	NUT AUTOMATION M6 X 1.0	
8	102268-001	HHCS M6X1X25	Inserted in bottom of footplate.
9	104328	HEEL LOOP PEG	
10A	104380-001	ADJUSTABLE FOOT REST STRAP	15" Footrest Width
10B	104380-002	ADJUSTABLE FOOT REST STRAP	16" Footrest Width
10C	104380-003	ADJUSTABLE FOOT REST STRAP	17-18" Footrest Width
10D	104380-004	ADJUSTABLE FOOT REST STRAP	19-22" Footrest Width
11	104160	BUSHING FOOTREST	
11-14	107485	FOOTREST CLAMP ASSM	
>>>>		60,70,80 HANGERS - SHORT EXT - RIGHT	
1A,2A,3-10A	107816	CAA STRT SHT EXT ASM 15W R	Right- 15 W- SHORT
1A,2B,3-10B	107817	CAA STRT SHT EXT ASM 16W R	Right- 16 W- SHORT
1A,2C,3-10B	107818	CAA STRT SHT EXT ASM 17W R	Right- 17 W- SHORT
1A,2D,3-10C	107819	CAA STRT SHT EXT ASM 18W R	Right- 18 W- SHORT
1A,2E,3-10C	107820	CAA STRT SHT EXT ASM 19W R	Right- 19 W- SHORT
1A,2F,3-10D	107821	CAA STRT SHT EXT ASM 20W R	Right- 20 W- SHORT
1A,2G,3-10D	107822	CAA STRT SHT EXT ASM 21&22W R	Right- 21&22 W- SHORT
>>>>		60,70,80 HANGERS - SHORT EXT - LEFT	
1A,2A,3-10A	107823	CAA STRT SHT EXT ASM 15W L	Left- 15 W- SHORT
1A,2B,3-10B	107824	CAA STRT SHT EXT ASM 16W L	Left- 16 W- SHORT
1A,2C,3-10B	107825	CAA STRT SHT EXT ASM 17W L	Left- 17 W- SHORT
1A,2D,3-10C	107826	CAA STRT SHT EXT ASM 18W L	Left- 18 W- SHORT
1A,2E,3-10C	107827	CAA STRT SHT EXT ASM 19W L	Left- 19 W- SHORT
1A,2F,3-10D	107828	CAA STRT SHT EXT ASM 20W L	Left- 20 W- SHORT
1A,2G,3-10D	107829	CAA STRT SHT EXT ASM 21&22W L	Left- 21&22 W- SHORT
>>>>		60,70,80& 60,70 HEMI HANGER- RIGHT	
1B,2A,3-10A	107830	CAA STRT MED EXT ASM 15W R	Right- 15 W- MED
1B,2B,3-10B	107831	CAA STRT MED EXT ASM 16W R	Right- 16 W- MED
1B,2C,3-10B	107832	CAA STRT MED EXT ASM 17W R	Right- 17 W- MED
1B,2D,3-10C	107833	CAA STRT MED EXT ASM 18W R	Right- 18 W- MED
1B,2E,3-10C	107834	CAA STRT MED EXT ASM 19W R	Right- 19 W- MED
1B,2F,3-10D	107835	CAA STRT MED EXT ASM 20W R	Right- 20 W- MED
1B,2G,3-10D	107836	CAA STRT MED EXT ASM 21&22W R	Right- 21&22 W- MED
>>>>		60,70,80& 60,70 HEMI HANGER- LEFT	
1B,2A,3-10A	107837	CAA STRT MED EXT ASM 15W L	Left- 15 W- MED
1B,2B,3-10B	107838	CAA STRT MED EXT ASM 16W L	Left- 16 W- MED
1B,2C,3-10B	107839	CAA STRT MED EXT ASM 17W L	Left- 17 W- MED
1B,2D,3-10C	107840	CAA STRT MED EXT ASM 18W L	Left- 18 W- MED
1B,2E,3-10C	107841	CAA STRT MED EXT ASM 19W L	Left- 19 W- MED

Pos.	Item Number	Description	Remarks
1B,2F,3-10D	107842	CAA STRT MED EXT ASM 20W L	Left- 20 W- MED
1B,2G,3-10D	107843	CAA STRT MED EXT ASM 21&22W L	Left- 21&22 W- MED
>>>>		60,70,80& 60,70 HEMI HANGER- RIGHT	
1C,2A,3-10A	107844	CAA STRT LNG EXT ASM 15W R	Right- 15 W- LONG
1C,2B,3-10B	107845	CAA STRT LNG EXT ASM 16W R	Right- 16 W- LONG
1C,2C,3-10B	107846	CAA STRT LNG EXT ASM 17W R	Right- 17 W- LONG
1C,2D,3-10C	107847	CAA STRT LNG EXT ASM 18W R	Right- 18 W- LONG
1C,2E,3-10C	107848	CAA STRT LNG EXT ASM 19W R	Right- 19 W- LONG
1C,2F,3-10D	107849	CAA STRT LNG EXT ASM 20W R	Right- 20 W- LONG
1C,2G,3-10D	107850	CAA STRT LNG EXT ASM 21&22W R	Right- 21&22 W- LONG
>>>>		60,70,80& 60,70 HEMI HANGER- LEFT	
1C,2A,3-10A	107851	CAA STRT LNG EXT ASM 15W L	Left- 15 W- LONG
1C,2B,3-10B	107852	CAA STRT LNG EXT ASM 16W L	Left- 16 W- LONG
1C,2C,3-10B	107853	CAA STRT LNG EXT ASM 17W L	Left- 17 W- LONG
1C,2D,3-10C	107854	CAA STRT LNG EXT ASM 18W L	Left- 18 W- LONG
1C,2E,3-10C	107855	CAA STRT LNG EXT ASM 19W L	Left- 19 W- LONG
1C,2F,3-10D	107856	CAA STRT LNG EXT ASM 20W L	Left- 20 W- LONG
1C,2G,3-10D	107857	CAA STRT LNG EXT ASM 21&22W L	Left- 21&22 W- LONG
>>>>		60&70 HEMI HANGERS- SHORT EXT- RIGHT	
1D,2A,3-10A	129710	CAA FOOT KIT SHT HNGR 15W R	Right-Hemi-15W; add Ext behind the Hemi
1D,2B,3-10B	129712	CAA FOOT KIT SHT HNGR 16W R	Right-Hemi-16W; add Ext behind the Hemi
1D,2C,3-10B	129714	CAA FOOT KIT SHT HNGR 17W R	Right-Hemi-17W; add Ext behind the Hemi
1D,2D,3-10C	129716	CAA FOOT KIT SHT HNGR 18W R	Right-Hemi-18W; add Ext behind the Hemi
1D,2E,3-10C	129718	CAA FOOT KIT SHT HNGR 19W R	Right-Hemi-19W; add Ext behind the Hemi
1D,2F,3-10D	129720	CAA FOOT KIT SHT HNGR 20W R	Right-Hemi-20W; add Ext behind the Hemi
1D,2G,3-10D	129722	CAA FOOT KIT SHT HNGR 22W R	Right-Hemi-21&22W; add Ext behind the Hemi
>>>>		60&70 HEMI HANGERS- SHORT EXT - LEFT	
1D,2A,3-10A	129711	CAA FOOT KIT SHT HNGR 15W L	Left-Hemi-15W; add Ext behind the Hemi
1D,2B,3-10B	129713	CAA FOOT KIT SHT HNGR 16W L	Left-Hemi-16W; add Ext behind the Hemi
1D,2C,3-10B	129715	CAA FOOT KIT SHT HNGR 17W L	Left-Hemi-17W; add Ext behind the Hemi
1D,2D,3-10C	129717	CAA FOOT KIT SHT HNGR 18W L	Left-Hemi-18W; add Ext behind the Hemi
1D,2E,3-10C	129719	CAA FOOT KIT SHT HNGR 19W L	Left-Hemi-19W; add Ext behind the Hemi
1D,2F,3-10D	129721	CAA FOOT KIT SHT HNGR 20W L	Left-Hemi-20W; add Ext behind the Hemi
1D,2G,3-10D	129723	CAA FOOT KIT SHT HNGR 22W L	Left-Hemi-21&22W; add Ext behind the Hemi
		Ship assembled part #	Use with multiple assemblies
	ASSY-HNG-FP	HANGER/FOOTPLATE ASSY REQUIRED	add with Hanger & Footplate kit

Note: Effective on GP SA beginning GP-95902, Kids Q2 SE beginning QKE-003425, LX/LXI beginning LXI-060868, Quickie TS beginning QT-044951 & GTE-002092.

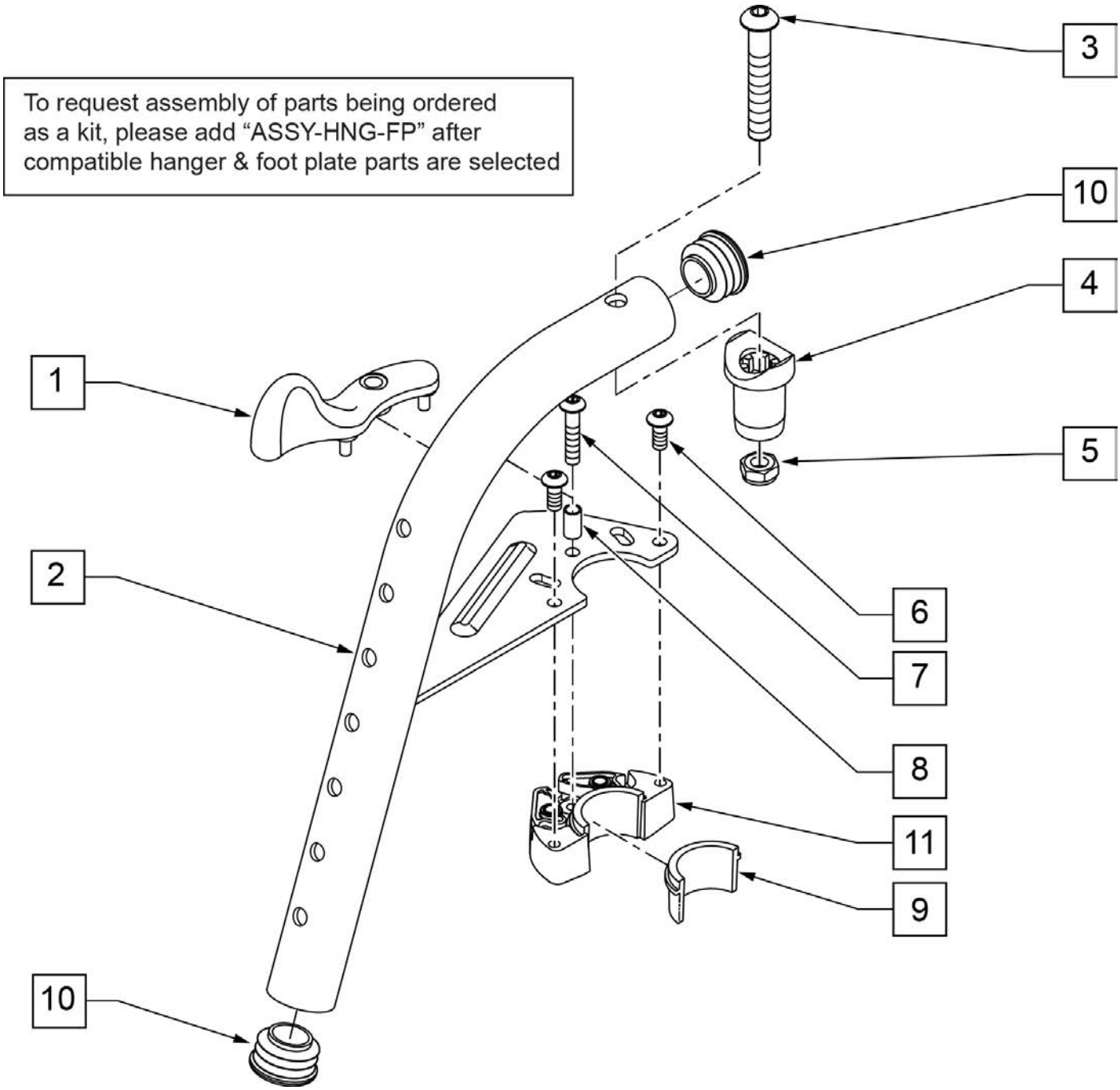

Pos.	Item Number	Description	Remarks
1	052296	SWING I/O LATCH LEVER R W/ PINS	RIGHT
1	052297	SWING I/O LATCH LEVER L W/ PINS	LEFT
3	106983	BHCS 5/16 -18 x 2 SHLDR ROHS	
4	561197	PLASTIC PIVOT SADDLE	Includes nylock nut
5	202117	5/16-18 NYLOCK NUT THICK BLK	
6	102259-001	BHCS M5 X .8 X 12 BLK W/ PL	
7	230494	M5-30 BTTN HD SOC C/S BLK	
8	052054	BUSHING PIVOT HANGER SWING I/O	
10	561062	1" INSERT PLUG .065 RIBS	
6,9,11	120976	ASSY LATCH BLOCK ANTI LIFT	
1-11	101153S	70D FM SWING I/O HNGR ASSY R	RIGHT
1-11	101154S	70D FM SWING I/O HNGR ASSY L	LEFT
		Ship assembled part #	Use with multiple assemblies
	ASSY-HNG-FP	HANGER/FOOTPLATE ASSY REQUIRED	add with Hanger & Footplate kit

70 DEG S/A FRONT MOUNT HANGER [07/2008]

Note: Discontinued on LX/LXI prior to LXI-060868, Kids Q2 SE prior to QKE-003425, Quickie TS prior to QT-044951 & QTE-002092, GP S/A prior to GP-95902

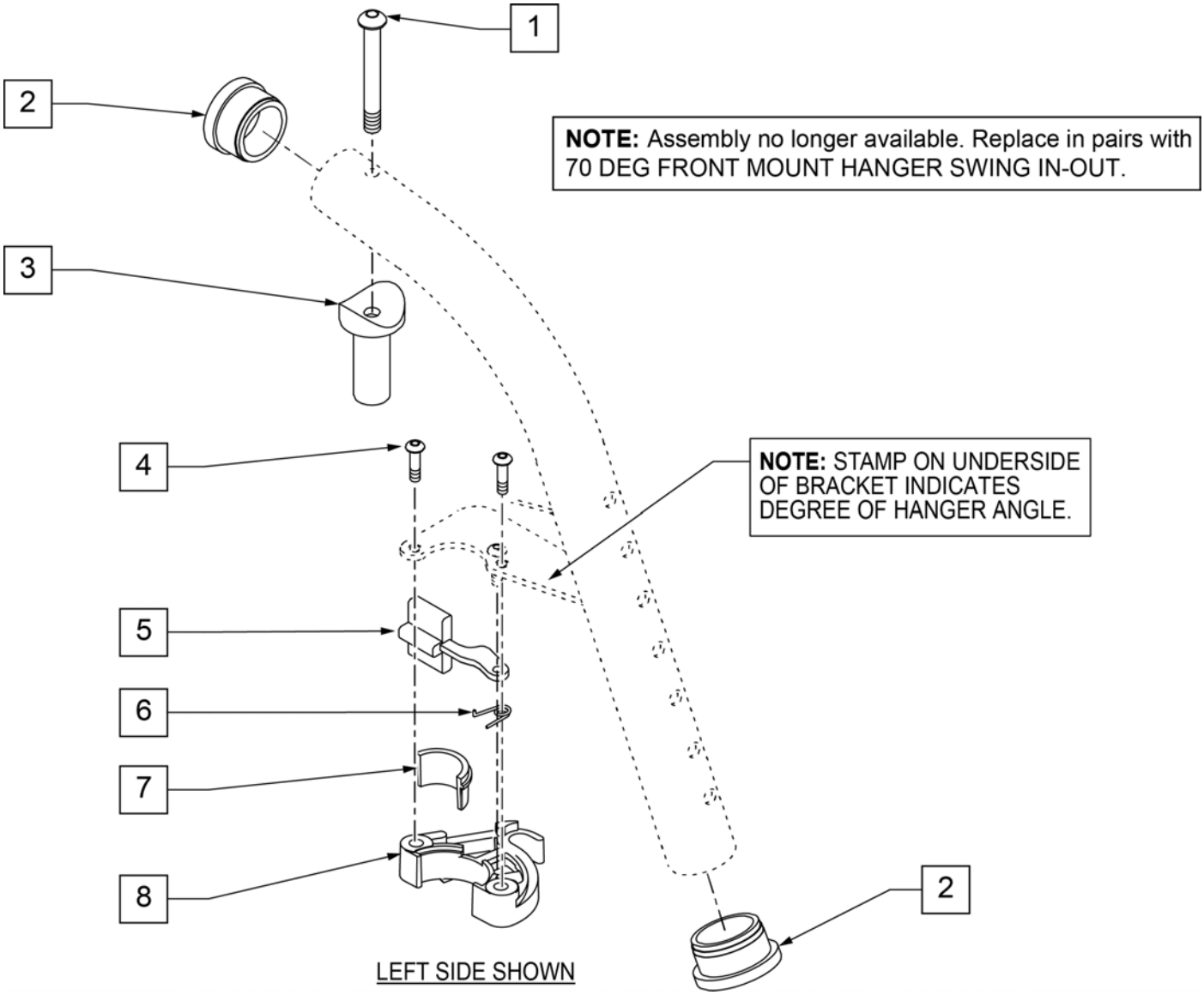

Pos.	Item Number	Description	Remarks
1	226217	5/16-18 x 2 BH C/S BLK	
2	561002	1" INSERT PLUG .083	
3	561197	PLASTIC PIVOT SADDLE	
4	226057	10/24 x .725 BTTN HD SOC BZ	
5	561079	S/A LATCH LEVER	
6	321136	S/A SPRING L RED	LEFT
6	321137	S/A SPRING R CLEAR	RIGHT
7,8	881500	LATCH BLOCK ASSM R	RIGHT
7,8	881501	LATCH BLOCK ASSM L	LEFT
4-8	881521	S/A LATCH KIT CASTING	RIGHT
4-8	881522	S/A LATCH KIT CASTING	LEFT

80 DEG FRONT MOUNT HANGER SWING IN-OUT

Note: Effective on GP SA beginning GP-95902, Kids Q2 SE beginning QKE-003425, LX/LXI beginning LXI-060868, Quickie TS beginning QT-044951 & GTE-002092.

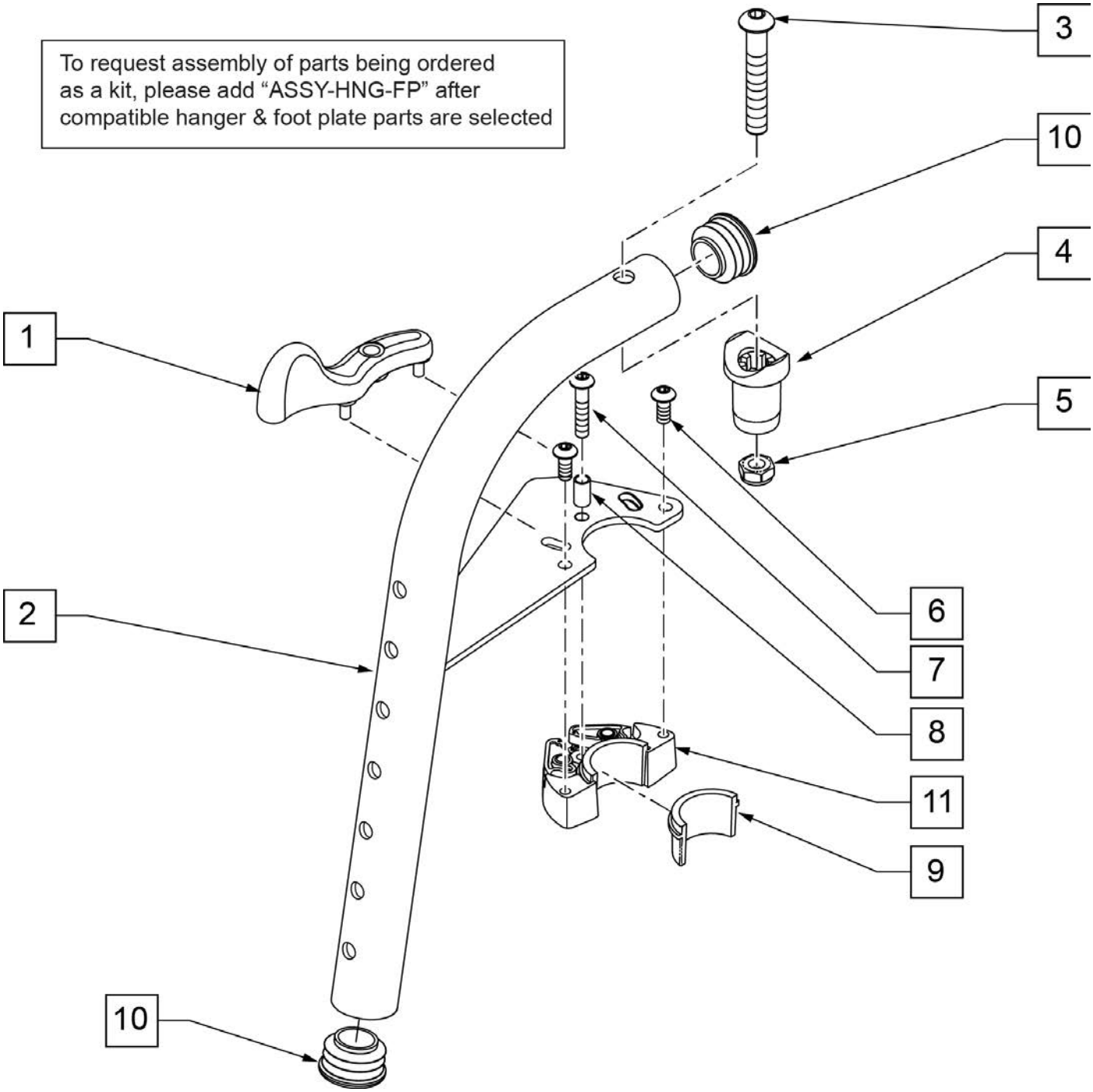

Pos.	Item Number	Description	Remarks
1	052296	SWING I/O LATCH LEVER R w/ PINS	RIGHT
1	052297	SWING I/O LATCH LEVER L w/ PINS	LEFT
3	106983	BHCS 5/16 -18 x 2 SHLDR ROHS	
4	561197	PLASTIC PIVOT SADDLE	Includes nylock nut
5	202117	5/16-18 NYLOCK NUT THICK BLK	
6	102259-001	BHCS M5 X .8 X 12 BLK W/PL	
7	230494	M5-30 BTTN HD SOC C/S BLK	
8	052054	BUSHING PIVOT HANGER SWING I/O	
10	561062	1" INSERT PLUG .065 RIBS	
6,9,11	120976	ASSY LATCH BLOCK ANTI LIFT	
1A,2A,3-11	101155S	80D FM SWNG I/O HNGR ASSY R	RIGHT
1B,2B,3-11	101156S	80D FM SWNG I/O HNGR ASSY L	LEFT
		Ship assembled part #	Use with multiple assemblies
	ASSY-HNG-FP	HANGER/FOOTPLATE ASSY REQUIRED	add with Hanger & Footplate kit

80 DEG S/A FRONT MOUNT HANGER

Note: Discontinued on LX/LXI prior to LXI-060868, Kids Q2 SE prior to QKE-003425, Quickie TS prior to QT-044951 & QTE-002092, GP S/A prior to GP-95902

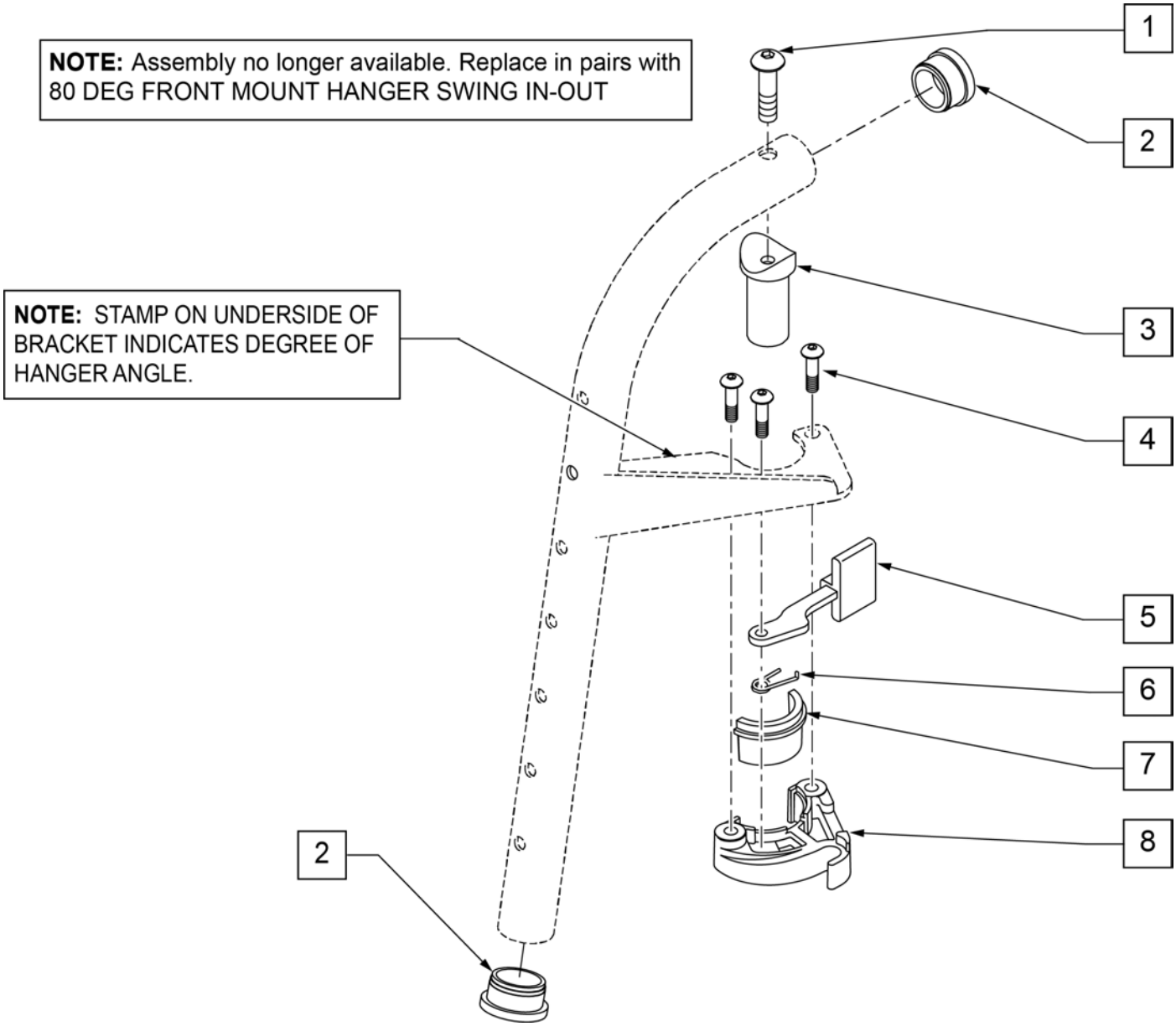

Pos.	Item Number	Description	Remarks
1	226217	5/16-18 x 2 BH C/S BLK	
2	561002	1" INSERT PLUG .083	
3	561197	PLASTIC PIVOT SADDLE	
4	226057	10/24 x .725 BTTN HD SOC BZ	
5	561079	S/A LATCH LEVER	
6	321136	S/A SPRING L RED	LEFT
6	321137	S/A SPRING R CLEAR	RIGHT
7,8	881500	LATCH BLOCK ASSM R	RIGHT
7,8	881501	LATCH BLOCK ASSM L	LEFT
4-8	881521	S/A LATCH KIT CASTING	RIGHT
4-8	881522	S/A LATCH KIT CASTING	LEFT

90 DEG FRONT MOUNT HANGER SWING IN-OUT

NOTE: Effective on LX/LXI as of 10/24/2008.

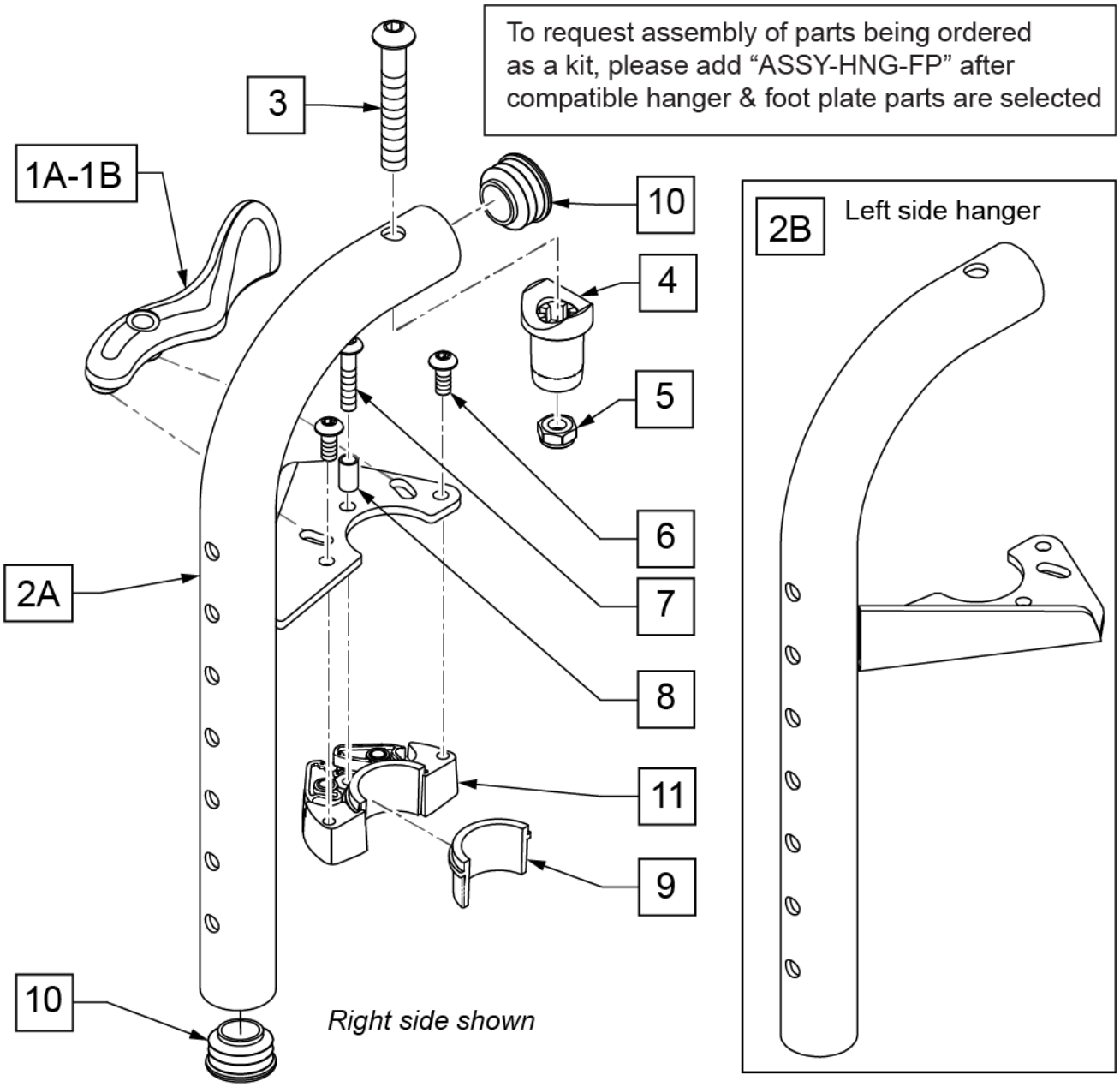

Pos.	Item Number	Description	Remarks
1A	052297	SWING I/O LATCH LEVER L w/ PINS	Used on Right Side 90D Swing I/O Hanger only
1B	052296	SWING I/O LATCH LEVER R w/ PINS	Used on Left Side 90D Swing I/O Hanger only
3	106983	BHCS 5/16 -18 x 2 SHLDR ROHS	
4	561197	PLASTIC PIVOT SADDLE	
5	202117	5/16-18 NYLOCK NUT THICK BLK	
6	102259-001	BHCS M5 x .8 x 12 W /PL INORG	
7	230494	M5-30 BTTN HD SOC C/S BLK	
8	052054	BUSHING PIVOT HANGER SWING I/O	
10	561062	1" INSERT PLUG .065 RIBS	
6,9,11	120976	ASSY LATCH BLOCK ANTI LIFT	
1A,2A,3-11	101157S	90D FM SWNG I/O HNGR ASSY R	RIGHT
1B,2B,3-11	101158S	90D FM SWNG I/O HNGR ASSY L	LEFT
		Ship assembled part #	Use with multiple assemblies
	ASSY-HNG-FP	HANGER/FOOTPLATE ASSY REQUIRED	add with Hanger & Footplate kit

90 DEG S/A FRONT MOUNT HANGER

Note: Discontinued on LX/LXI prior to LXI-060868, Kids Q2 SE prior to QKE-003425, Quickie TS prior to QT-044951 & QTE-002092, GP S/A prior to GP-95902

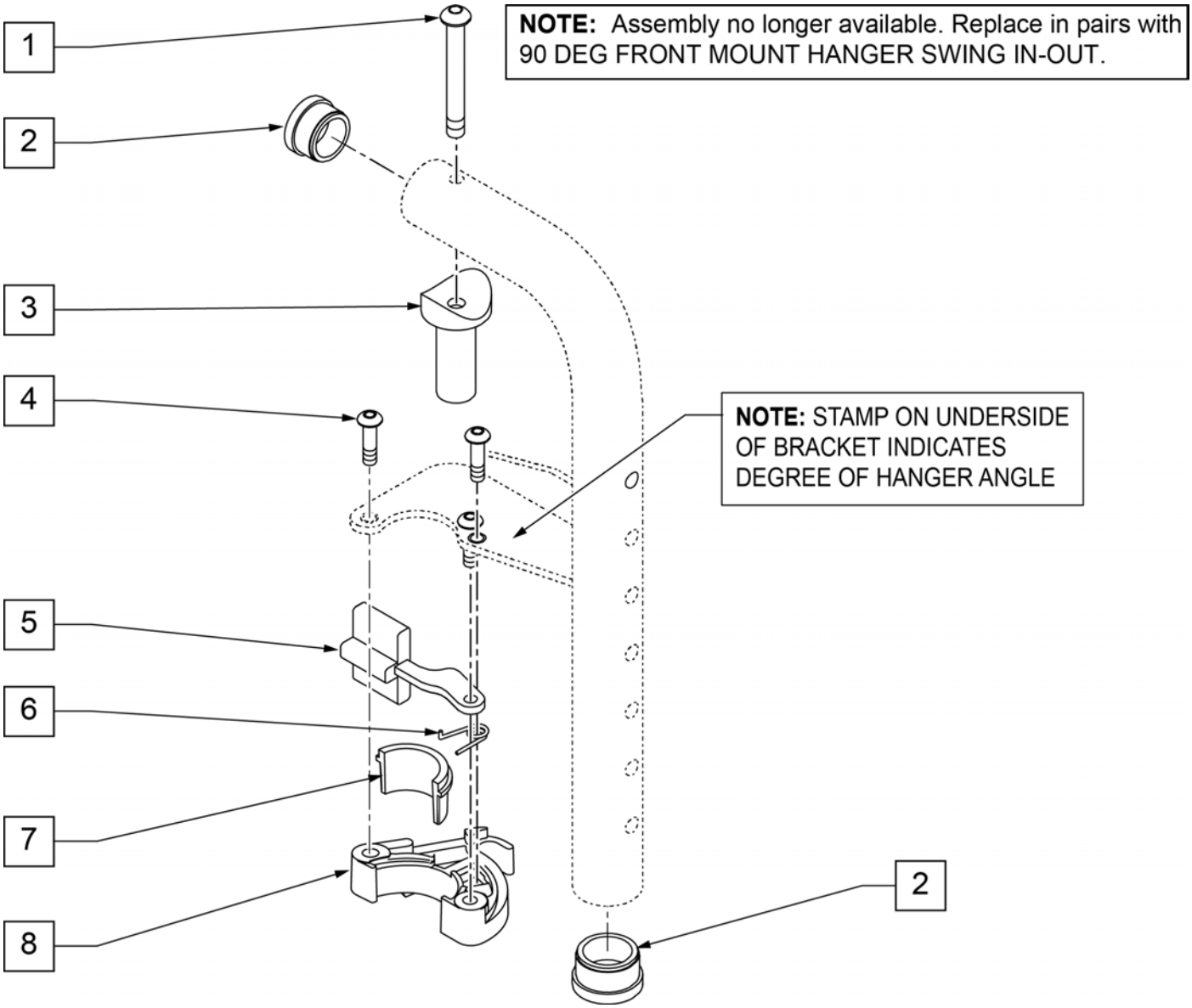

Pos.	Item Number	Description	Remarks
1	226217	5/16-18 x 2 BH C/S BLK	
2	561002	1" INSERT PLUG .083	
3	561197	PLASTIC PIVOT SADDLE	
4	226057	10/24 x .725 BTTN HD SOC BZ	
5	561079	S/A LATCH LEVER	
6	321136	S/A SPRING L RED	LEFT
6	321137	S/A SPRING R CLEAR	RIGHT
1,3	880545	PIVOT SADDLE .125 W/SCREW	
7,8	881500	LATCH BLOCK ASSM R	RIGHT
7,8	881501	LATCH BLOCK ASSM L	LEFT
5-8	881521	S/A LATCH KIT CASTING	RIGHT
5-8	881522	S/A LATCH KIT CASTING	LEFT

FRONT MOUNT HANGER EXT

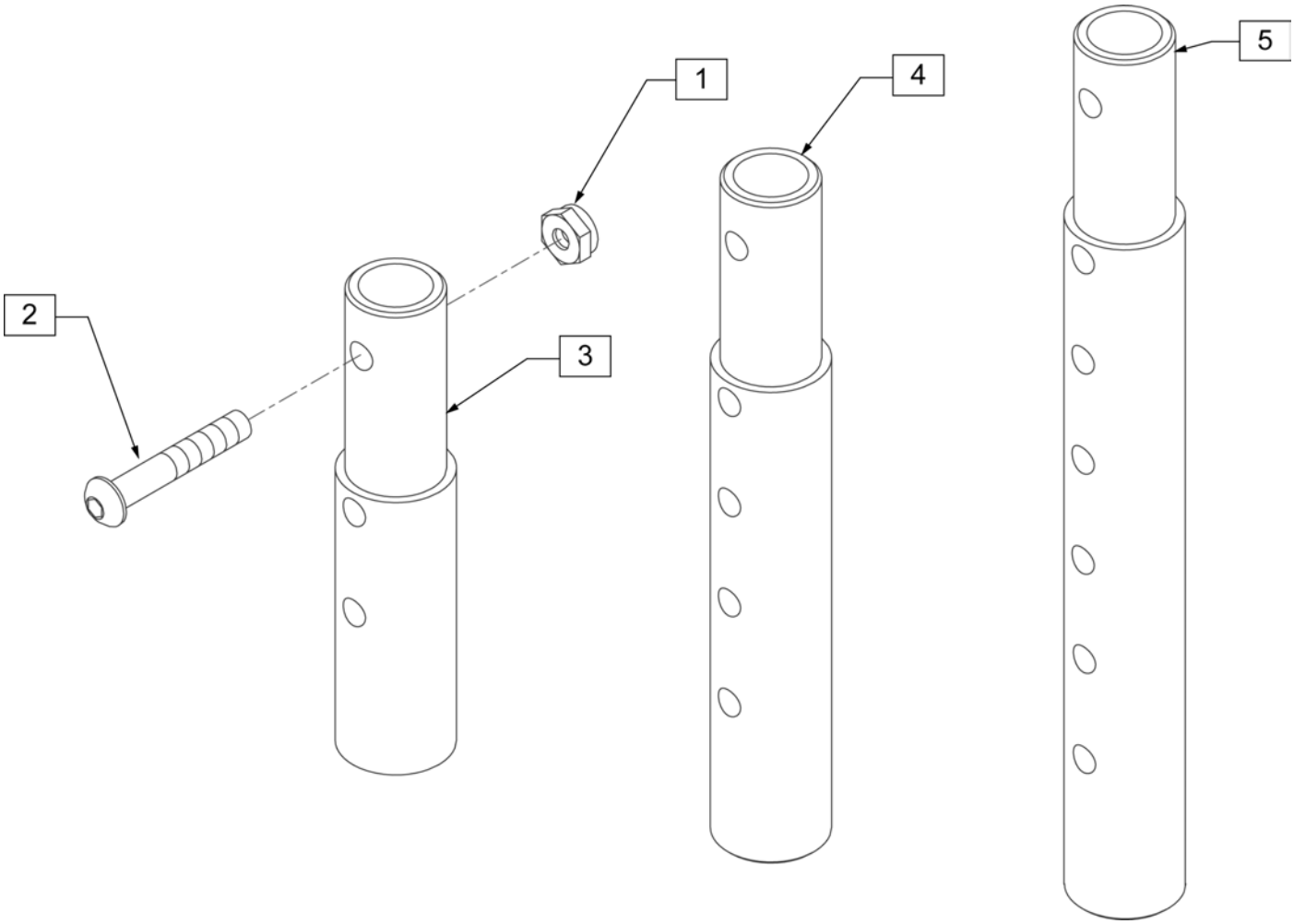

Pos.	Item Number	Description	Remarks
1	106935	NUT NYLOCK THIN 1/4 -28 ROHS	
2	106961	BHCS 1/4 -28 x 1 1/4 ROHS	
1-3	111505	2" FOOTREST EXTENSION TUBE W/ HDWR ASSM	2" EXT (PAIR)
1, 2, 4	111506	4" FOOTREST EXTENSION TUBE W/ HDWR ASSM	4" EXT (PAIR)
1, 2, 5	111507	6" FOOTREST EXTENSION TUBE W/ HDWR ASSM	6" EXT (PAIR)

KIDS ANGLE ADJ FOOTPLATE FRONT MOUNT

[02/20/2019]

To have complete Footrest ship assembled, choose compatible Hanger + Footplate part numbers and add “ASSY-HNG-FP” to order

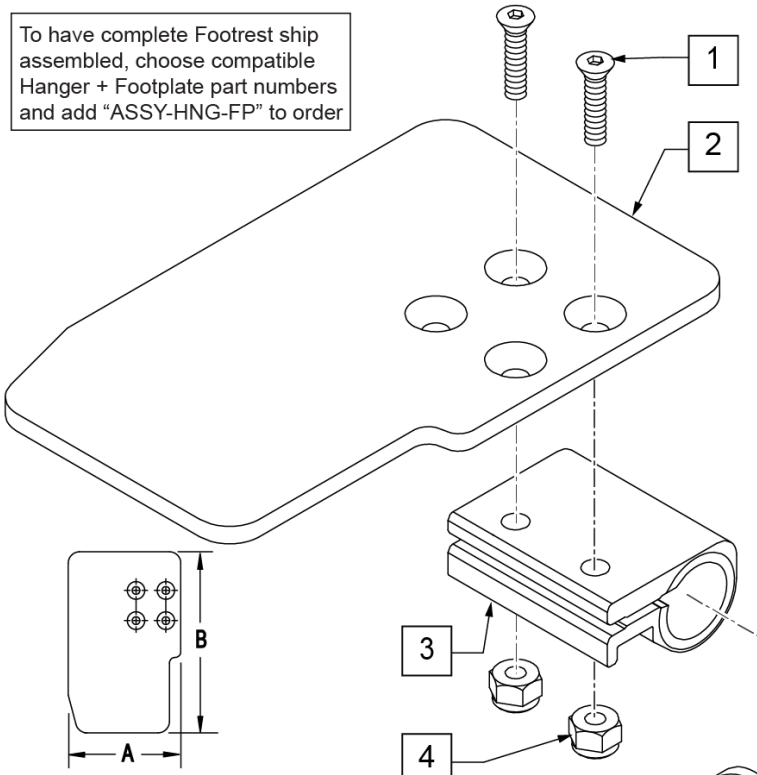

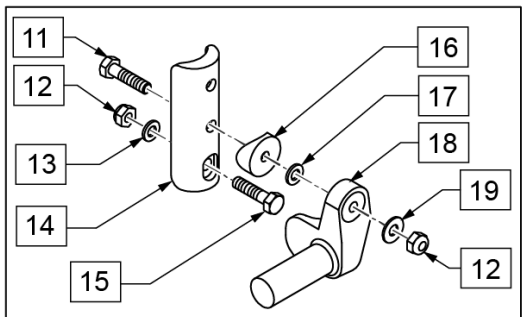

Note: used on Plunger-Style Swing In-Out Hangers; Kit 129764 (items 11-19) is PAIR

MEASURING GUIDE

CHAIR WIDTH	“A”	“B”
10” W	3.55”	6.00”
11” W	4.05”	6.00”
12” W	4.55”	6.00”
13” W	5.05”	6.00”
14” W	5.55”	6.00”
15” W	6.05”	6.00”
16” W	6.55”	6.00”

INSET FORMULA

0” Inset (Seat Width) = Footrest Width
1” Inset (Seat Width) -2” = Footrest Width
“V” Hanger (Seat Width) -4” = Footrest Width
Offset Hanger Receiver (Seat Width) +2” = Footrest Width

Pos.	Item Number	Description	Remarks
1	106978	FHCS 1/4-28 X 7/8 ROHS	
2	500635	KIDS ANGL ADJ F/PLT 10	RIGHT
2	500636	KIDS ANGL ADJ F/PLT 10	LEFT
2	500637	KIDS ANGL ADJ F/PLT 11	RIGHT
2	500638	KIDS ANGL ADJ F/PLT 11	LEFT
2	500639	KIDS ANGL ADJ F/PLT 12	RIGHT
2	500640	KIDS ANGL ADJ F/PLT 12	LEFT
2	500641	KIDS ANGL ADJ F/PLT 13	RIGHT
2	500642	KIDS ANGL ADJ F/PLT 13	LEFT
2	500643	KIDS ANGL ADJ F/PLT 14	RIGHT
2	500644	KIDS ANGL ADJ F/PLT 14	LEFT
2	500645	KIDS ANGL ADJ F/PLT 15	RIGHT
2	500646	KIDS ANGL ADJ F/PLT 15	LEFT
2	500647	KIDS ANGL ADJ F/PLT 16	RIGHT
2	500648	KIDS ANGL ADJ F/PLT 16	LEFT
3	550350	3/4 CLAMP ADJ FOOTPLATE	
4	106935	NUT NYLOCK THIN 1/4-28 ROHS	
5	226147	1/4-28 X 1.85 BH C/S BLK ZN	

Pos.	Item Number	Description	Remarks
6	106945	WASHER FLAT SAE 1/4 ROHS	
7	541000	FTRST MOUNTING BRKT 1/2" RAD R	RIGHT
7	541001	FTRST MOUNTING BRKT 1/2" RAD L	LEFT
8	561004	1 SADDLE 1/4 HOLE	
9	106943	WASHER FLAT THIN AN 1/4	
10	106941	NUT AUTOMATION 1/4-28 ROHS	
11	102268-001	HHCS M6 X 1 X 25	
12	132626	NUT AUTOMATION M6 X 1.0 ROHS	
13	107383	WASHER FLAT M6 ROHS	
15	118198	HHCS M6 X 1 X 40 PART NP	
16	561004	1" SADDLE 1/4" HOLE	
17	106943	WASHER FLAT AN 1/4 ROHS	
19	106945	WASHER FLAT SAE 1/4 ROHS	
1-4	158632	KAA F/PLT KIT 10 RT	RIGHT; used with Front Mount Adapter Kit on Plunger-Style Swing In/Out Hangers
1-4	158633	KAA F/PLT KIT 10 LT	LEFT; used with Front Mount Adapter Kit on Plunger-Style Swing In/Out Hangers
1-4	158634	KAA F/PLT KIT 11 RT	RIGHT; used with Front Mount Adapter Kit on Plunger-Style Swing In/Out Hangers
1-4	158635	KAA F/PLT KIT 11 LT	LEFT; used with Front Mount Adapter Kit on Plunger-Style Swing In/Out Hangers
1-4	158636	KAA F/PLT KIT 12 RT	RIGHT; used with Front Mount Adapter Kit on Plunger-Style Swing In/Out Hangers
1-4	158637	KAA F/PLT KIT 12 LT	LEFT; used with Front Mount Adapter Kit on Plunger-Style Swing In/Out Hangers
1-4	158638	KAA F/PLT KIT 13 RT	RIGHT; used with Front Mount Adapter Kit on Plunger-Style Swing In/Out Hangers
1-4	158639	KAA F/PLT KIT 13 LT	LEFT; used with Front Mount Adapter Kit on Plunger-Style Swing In/Out Hangers
1-4	158640	KAA F/PLT KIT 14 RT	RIGHT; used with Front Mount Adapter Kit on Plunger-Style Swing In/Out Hangers
1-4	158641	KAA F/PLT KIT 14 LT	LEFT; used with Front Mount Adapter Kit on Plunger-Style Swing In/Out Hangers
1-4	158642	KAA F/PLT KIT 15 RT	RIGHT; used with Front Mount Adapter Kit on Plunger-Style Swing In/Out Hangers
1-4	158643	KAA F/PLT KIT 15 LT	LEFT; used with Front Mount Adapter Kit on Plunger-Style Swing In/Out Hangers
1-4	158644	KAA F/PLT KIT 16 RT	RIGHT; used with Front Mount Adapter Kit on Plunger-Style Swing In/Out Hangers
1-4	158645	KAA F/PLT KIT 16 LT	LEFT; used with Front Mount Adapter Kit on Plunger-Style Swing In/Out Hangers
1-10	828821	KIDS ANG ADJ F/PLT ASSM 10	RIGHT; used with Old-Style Latch Block Swing In/Out & S/A Hangers
1-10	828822	KIDS ANG ADJ F/PLT ASSM 10	LEFT; used with Old-Style Latch Block Swing In/Out & S/A Hangers
1-10	828823	KIDS ANG ADJ F/PLT ASSM 11	RIGHT; used with Old-Style Latch Block Swing In/Out & S/A Hangers
1-10	828824	KIDS ANG ADJ F/PLT ASSM 11	LEFT; used with Old-Style Latch Block Swing In/Out & S/A Hangers
1-10	828825	KIDS ANG ADJ F/PLT ASSM 12	RIGHT; used with Old-Style Latch Block Swing In/Out & S/A Hangers
1-10	828826	KIDS ANG ADJ F/PLT ASSM 12	LEFT; used with Old-Style Latch Block Swing In/Out & S/A Hangers
1-10	828827	KIDS ANG ADJ F/PLT ASSM 13	RIGHT; used with Old-Style Latch Block Swing In/Out & S/A Hangers
1-10	828828	KIDS ANG ADJ F/PLT ASSM 13	LEFT; used with Old-Style Latch Block Swing In/Out & S/A Hangers
1-10	828829	KIDS ANG ADJ F/PLT ASSM 14	RIGHT; used with Old-Style Latch Block Swing In/Out & S/A Hangers
1-10	828830	KIDS ANG ADJ F/PLT ASSM 14	LEFT; used with Old-Style Latch Block Swing In/Out & S/A Hangers
1-10	828831	KIDS ANG ADJ F/PLT ASSM 15	RIGHT; used with Old-Style Latch Block Swing In/Out & S/A Hangers
1-10	828832	KIDS ANG ADJ F/PLT ASSM 15	LEFT; used with Old-Style Latch Block Swing In/Out & S/A Hangers

Pos.	Item Number	Description	Remarks
1-10	828833	KIDS ANG ADJ F/PLT ASSM 16	RIGHT; used with Old-Style Latch Block Swing In/Out & S/A Hangers
1-10	828834	KIDS ANG ADJ F/PLT ASSM 16	LEFT; used with Old-Style Latch Block Swing In/Out & S/A Hangers
1-10	921226	KIDS ANG ADJ F/PLT ASSM 10	PAIR; used with Old-Style Latch Block Swing In/Out & S/A Hangers
1-10	921227	KIDS ANG ADJ F/PLT ASSM 11	PAIR; used with Old-Style Latch Block Swing In/Out & S/A Hangers
1-10	921228	KIDS ANG ADJ F/PLT ASSM 12	PAIR; used with Old-Style Latch Block Swing In/Out & S/A Hangers
1-10	921229	KIDS ANG ADJ F/PLT ASSM 13	PAIR; used with Old-Style Latch Block Swing In/Out & S/A Hangers
1-10	921230	KIDS ANG ADJ F/PLT ASSM 14	PAIR; used with Old-Style Latch Block Swing In/Out & S/A Hangers
1-10	921231	KIDS ANG ADJ F/PLT ASSM 15	PAIR; used with Old-Style Latch Block Swing In/Out & S/A Hangers
1-10	921232	KIDS ANG ADJ F/PLT ASSM 16	PAIR; used with Old-Style Latch Block Swing In/Out & S/A Hangers
11-19	129764	AAA FRNT MNT ADAPTER KIT PR	AAA FRNT MNT fits both Kids and Adult Angle Adjustable Footplates
		Ship assembled part #	Use with multiple assemblies
	ASSY-HNG-FP	HANGER/FOOTPLATE ASSY REQUIRED	add with Hanger & Footplate kit

ADULT ANGLE-ADJ FOOTPLATE FRONT MOUNT

Note: for QX Series or SR45 footplate replacement parts see the ordering guide marked specifically for these two models in the informations panel.

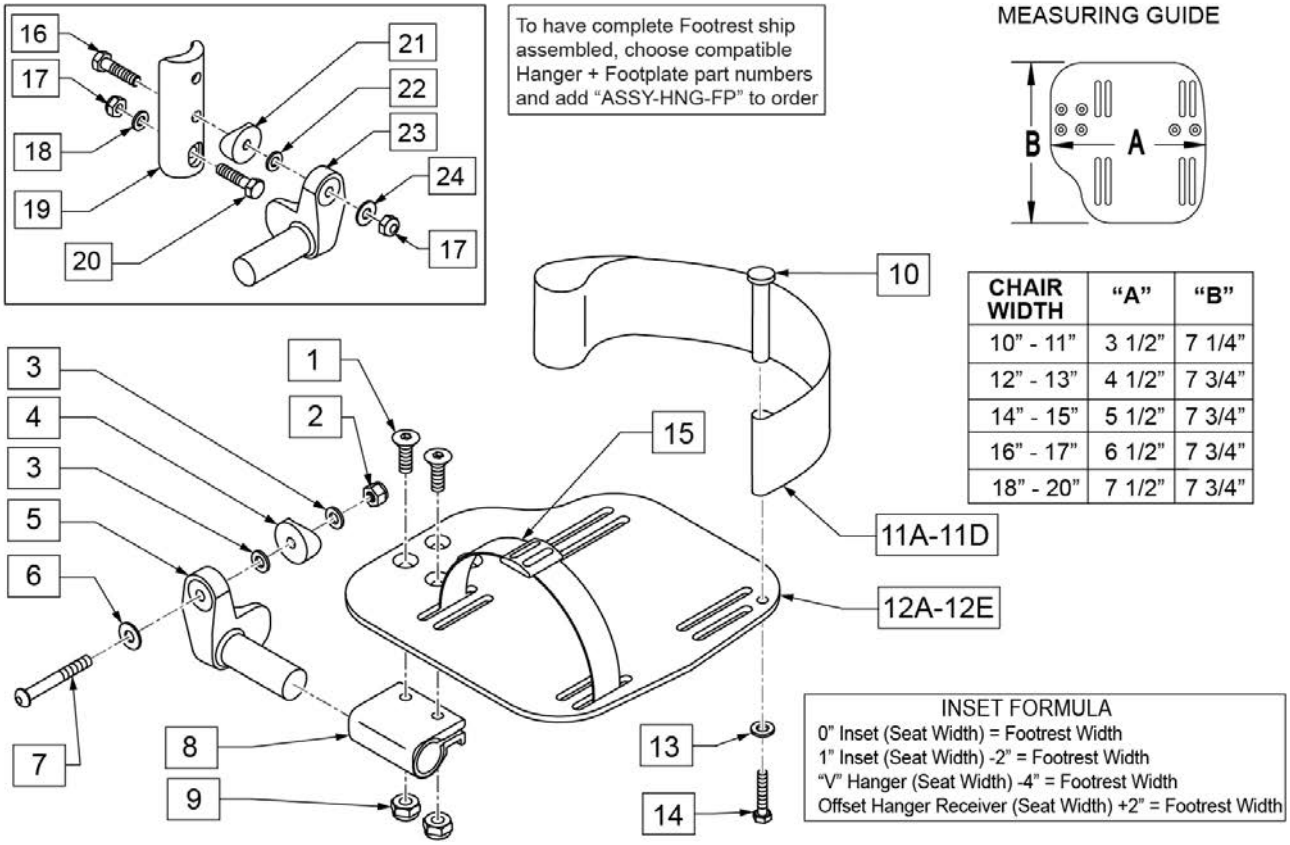

CHAIR WIDTH	"A"	"B"
10" - 11"	3 1/2"	7 1/4"
12" - 13"	4 1/2"	7 3/4"
14" - 15"	5 1/2"	7 3/4"
16" - 17"	6 1/2"	7 3/4"
18" - 20"	7 1/2"	7 3/4"

Pos.	Item Number	Description	Remarks
1	106978	FHCS 1/4-28 X 7/8	
2	106934	NUT NYLOCK 1/4-28	
3	106944	WASHER FLAT THIN AN 1/4	
4	561004	Q2 SADDLE	
5	541000	FTRST MOUNTING BRKT 1/2" RAD R	Right
5	541001	FTRST MOUNTING BRKT 1/2" RAD L	Left
6	106945	WASHER FLAT SAE 1/4 ROHS	
7	106964	BHCS 1/4-28 X 2	
8	550350	3/4 CLMP ADJ FT PLT	
9	106935	NUT NYLOCK THIN 1/4-28 ROHS	
10	561040	HEEL LOOP PEG	
11A	104380-001	ADJ FOOTREST STRAP 14W	Used on 10"-13" wide
11B	104380-002	ADJ FOOTREST STRAP 15-16W	Used on 14"-15" wide
11C	104380-003	ADJ FOOTREST STRAP 17-18W	Used on 16"-17" wide
11D	104380-004	ADJ FOOTREST STRAP 19-20W	Used on 18"-20" wide
12A	500656	ADULT ANGL ADJ F/PLT 10/11	Right; 10"-11" wide
12A	500657	ADULT ANGL ADJ F/PLT 10/11	Left; 10"-11" wide

Pos.	Item Number	Description	Remarks
12B	500658	ADULT ANGL ADJ F/PLT 12/13	Right; 12"-13" wide
12B	500659	ADULT ANGL ADJ F/PLT 12/13	Left; 12"-13" wide
12C	500660	ADULT ANGL ADJ F/PLT 14/15	Right; 14"-15" wide
12C	500661	ADULT ANGL ADJ F/PLT 14/15	Left; 14"-15" wide
12D	500662	ADULT ANGL ADJ F/PLT 16/17	Right; 16"-17" wide
12D	500663	ADULT ANGL ADJ F/PLT 16/17	Left; 16"-17" wide
12E	500664	ADULT ANGL ADJ F/PLT 18-20	Right; 18"-22" wide
12E	500665	ADULT ANGL ADJ F/PLT 18-20	Left; 18"-22" wide
13	107383	WASHER FLAT M6 ROHS	
14	102268-001	HHCS M6 X 1 X 25	
15	740260	TOE-ANKLE STRAP ADJ ADULT FOOTPLATE	
16	102268-001	HHCS M6 X 1 X 25	
17	132626	NUT AUTOMATION M6 X 1	
18	107383	WASHER FLAT M6 ROHS	
20	118198	HHCS M6X1X40 PART NP	
21	561004	Q2 SADDLE	
22	106943	WASHER FLAT AN 1/4 ROHS	
24	106945	WASHER FLAT SAE 1/4 ROHS	
16-24	129764	AAA FRNT MNT ADAPTER KIT PR	Pair; fits both Kids & Adult Angle Adj Footplates
1,8-10,11A,12A,13,14	129765	AAA F/PLT KIT 10-11 RT	Right; used w/ 129764 on Plunger-Style Swing In/Out Hangers
1,8-10,11A,12A,13,14	129766	AAA F/PLT KIT 10-11 LFT	Left; used w/ 129764 on Plunger-Style Swing In/Out Hangers
1,8-10,11A,12B,13,14	129767	AAA F/PLT KIT 12-13 RT	Right; used w/ 129764 on Plunger-Style Swing In/Out Hangers
1,8-10,11A,12B,13,14	129768	AAA F/PLT KIT 12-13 LFT	Left; used w/ 129764 on Plunger-Style Swing In/Out Hangers
1,8-10,11B,12C,13,14	129769	AAA F/PLT KIT 14-15 RT	Right; used w/ 129764 on Plunger-Style Swing In/Out Hangers
1,8-10,11B,12C,13,14	129770	AAA F/PLT KIT 14-15 LFT	Left; used w/ 129764 on Plunger-Style Swing In/Out Hangers
1,8-10,11C,12D,13,14	129771	AAA F/PLT KIT 16-17 RT	Right; used w/ 129764 on Plunger-Style Swing In/Out Hangers
1,8-10,11C,12D,13,14	129772	AAA F/PLT KIT 16-17 LFT	Left; used w/ 129764 on Plunger-Style Swing In/Out Hangers
1,8-10,11D,12E,13,14	129773	AAA F/PLT KIT 18-20 RT	Right; used w/ 129764 on Plunger-Style Swing In/Out Hangers
1,8-10,11D,12E,13,14	129774	AAA F/PLT KIT 18-20 LFT	Left; used w/ 129764 on Plunger-Style Swing In/Out Hangers
1-10,11A,12B	111514	AAA FTPLT 90D 12/13 " R	Right; used w/ Old-Style Latch Block Swing In/Out & S/A Hngrs
1-10,11A,12B	111515	AAA FTPLT 90D 12/13" L	Left; used w/ Old-Style Latch Block Swing IO & S/A Hngrs
1-10,11B,12C	111516	AAA FTPLT 90D 14/15" R	Right; used w/ Old-Style Latch Block Swing In/Out & S/A Hngrs
1-10,11B,12C	111517	AAA FTPLT 90D 14/15" L	Left; used w/ Old-Style Latch Block Swing IO & S/A Hngrs
1-10,11C,12D	111518	AAA FTPLT 90D 16/17" R	Right; used w/ Old-Style Latch Block Swing In/Out & S/A Hngrs
1-10,11C,12D	111519	AAA FTPLT 90D 16/17" L	Left; used w/ Old-Style Latch Block Swing IO & S/A Hngrs
1-10,11D,12E	111520	AAA FTPLT 90D 18/20" R	Right; used w/ Old-Style Latch Block Swing In/Out & S/A Hngrs
1-10,11D,12E	111521	AAA FTPLT 90D 18/20" L	Left; used w/ Old-Style Latch Block Swing IO & S/A Hngrs
		Ship assembled part #	Use with multiple assemblies
	ASSY-HNG-FP	HANGER/FOOTPLATE ASSY REQUIRED	add with Hanger & Footplate kit

90 DEG FOOTBOARD

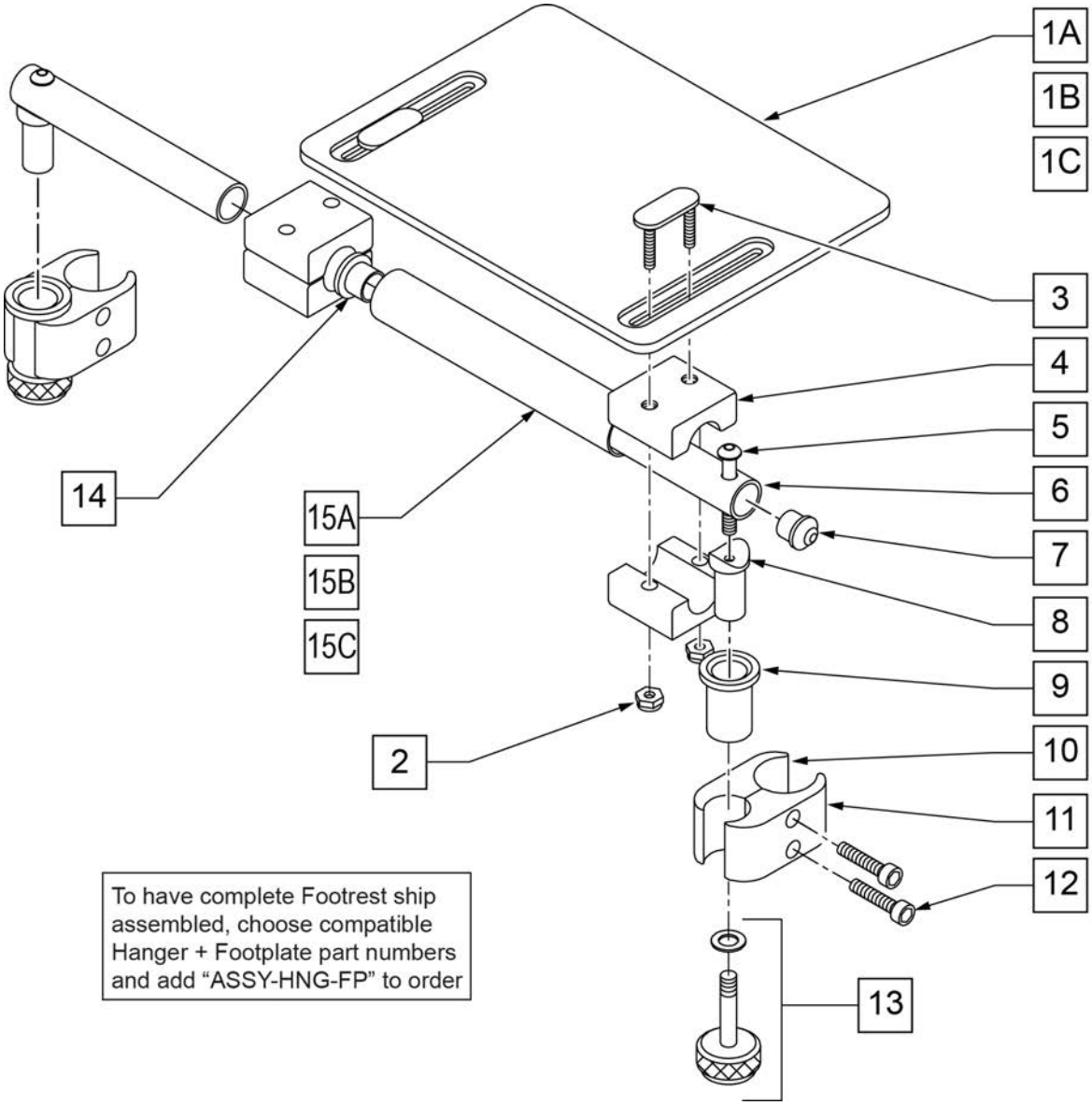

Pos.	Item Number	Description	Remarks
1A	562610	SLD FOOTPLATE ONLY 8" x 8" (10"-12" W)	10 -12" WIDE
1B	562612	SLD FOOTPLATE ONLY 10" x 8" (13"-14" W)	13 -14" WIDE
1C	500709	SLD FT PLT ALUM ONLY 12" x 8" (15"-16" W)	15 -16" WIDE
2	106933	NUT NYLOCK THIN 1/4-20 ROHS	
3	330120	SLD FT/ANGLE ADJ DOUBLE T BOLT	
4	550444	SOLID FOOT/ANG ADJ CLAMP BLK	
5	107028	BHCS 1/4-28 X 1-1/2 ROHS	
7	561034	SHORT DOME PLUG	
8	483236	SOLID FOOT INSERT SADDLE BLK	
10	550658	CLAMP 1 1/4" THREADED BLK	
11	550657	CLAMP 1 1/4" RECESS FULL BLK	
12	107032	SHCS 1/4-28 X 1 ROHS	
9,13	880559	SOLID FOOT LOCK KNOB ASSEMBLY	
14	560402	3/4" ID NY-LINER	
15A	521621	SLD FOOT SUPPORT TUBE BLK 10"-12"	10 -12" WIDE

Pos.	Item Number	Description	Remarks
15B	521622	SLD FOOT SUPPORT TUBE BLK 13"-14"	13 -14" WIDE
15C	521624	SLD FOOT SUPPORT TUBE BLK 15"-16"	15 -16" WIDE
5-8	880183	SLD FT PLT PIVOT TUBE SUB-ASSM	
1A,2-14, 15A	921801	SLD FT PLT ASSEMBLY 8" x 8" (10"-12" W)	10 -12" WIDE
1B,2-14, 15B	921803	SOLID FOOTPLATE ASSEMBLY 10" x 8" (13"-14" W)	13 -14" WIDE
1C,2-14, 15C	921805	SOLID FOOTPLATE ASSEMBLY12" x 8" (15"-16" W)	15 -16" WIDE
		Ship assembled part #	Use with multiple assemblies
	ASSY-HNG-FP	HANGER/FOOTPLATE ASSY REQUIRED	add with Hanger & Footplate kit

70 DEG FRONT MOUNT HANGER SWING IN-OUT

Note: Effective on GP SA beginning GP-95902, Kids Q2 SE beginning QKE-003425, LX/LXI beginning LXI-060868, Quickie TS beginning QT-044951 & GTE-002092.

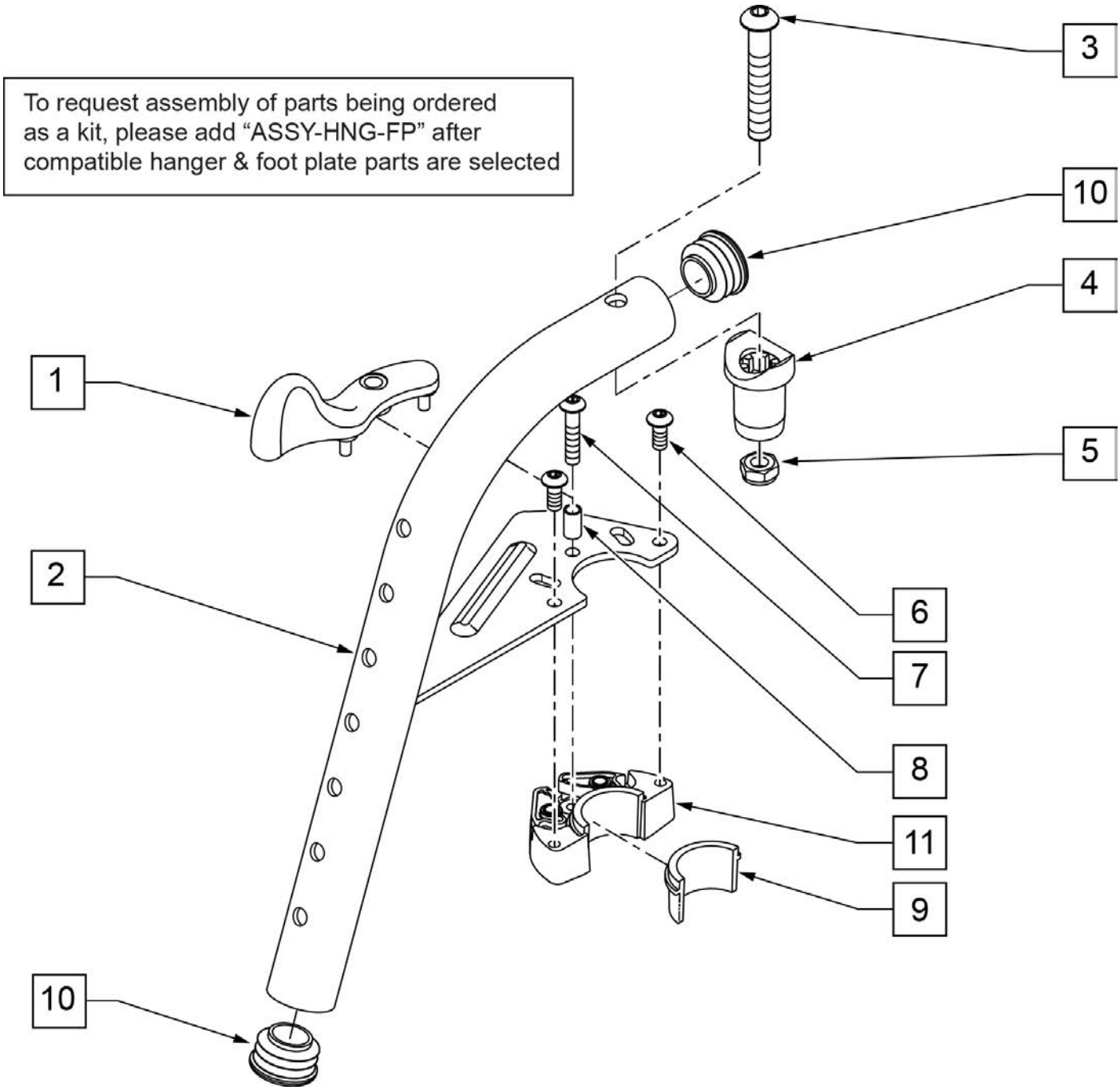

Pos.	Item Number	Description	Remarks
1	052296	SWING I/O LATCH LEVER R W/ PINS	RIGHT
1	052297	SWING I/O LATCH LEVER L W/ PINS	LEFT
3	106983	BHCS 5/16 -18 x 2 SHLDR ROHS	
4	561197	PLASTIC PIVOT SADDLE	Includes nylock nut
5	202117	5/16-18 NYLOCK NUT THICK BLK	
6	102259-001	BHCS M5 X .8 X 12 BLK W/ PL	
7	230494	M5-30 BTTN HD SOC C/S BLK	
8	052054	BUSHING PIVOT HANGER SWING I/O	
10	561062	1" INSERT PLUG .065 RIBS	
6,9,11	120976	ASSY LATCH BLOCK ANTI LIFT	
1-11	101153S	70D FM SWING I/O HNGR ASSY R	RIGHT
1-11	101154S	70D FM SWING I/O HNGR ASSY L	LEFT
		Ship assembled part #	Use with multiple assemblies
	ASSY-HNG-FP	HANGER/FOOTPLATE ASSY REQUIRED	add with Hanger & Footplate kit

80 DEG FRONT MOUNT HANGER SWING IN-OUT

Note: Effective on GP SA beginning GP-95902, Kids Q2 SE beginning QKE-003425, LX/LXI beginning LXI-060868, Quickie TS beginning QT-044951 & GTE-002092.

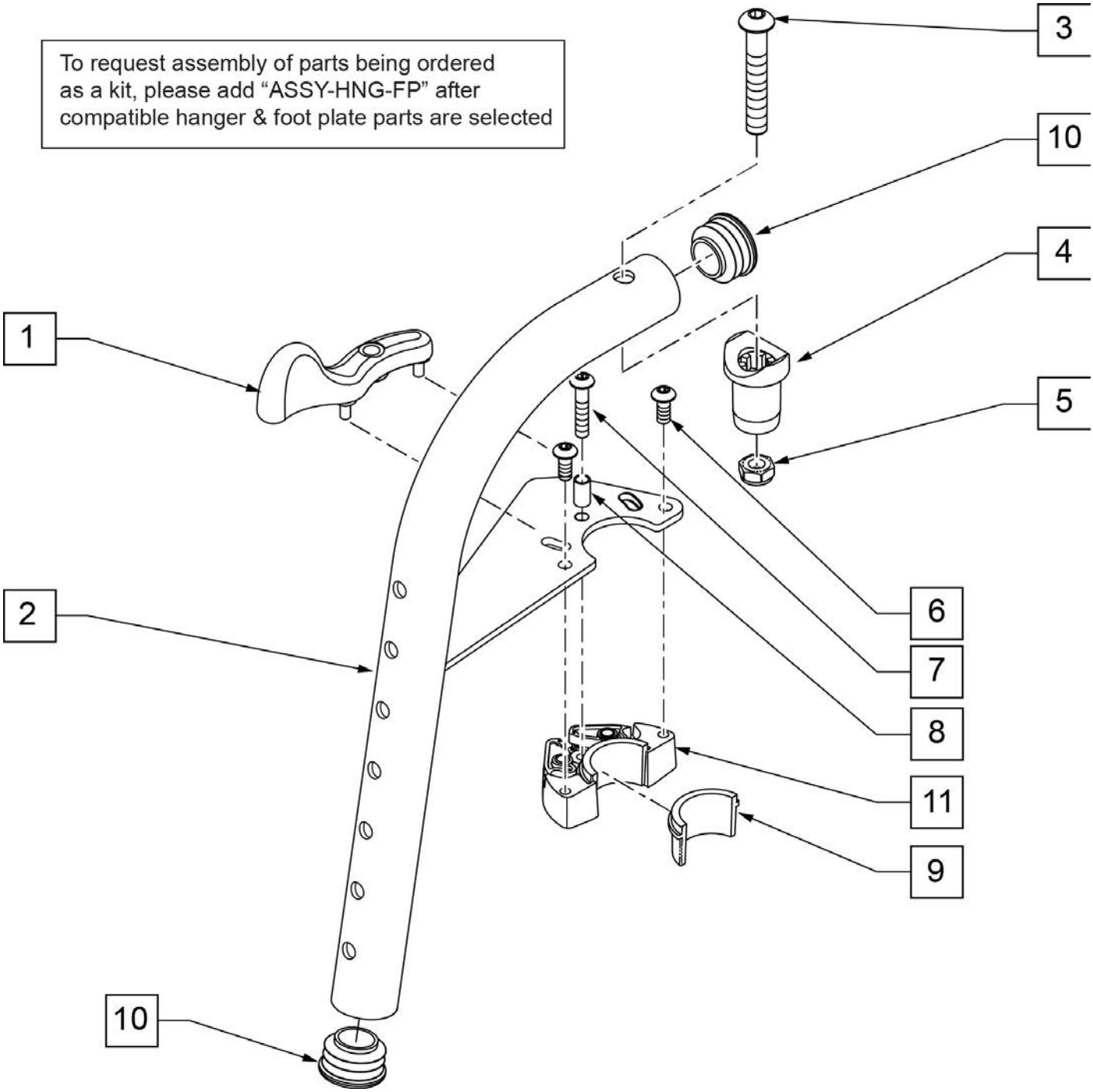

Pos.	Item Number	Description	Remarks
1	052296	SWING I/O LATCH LEVER R w/ PINS	RIGHT
1	052297	SWING I/O LATCH LEVER L w/ PINS	LEFT
3	106983	BHCS 5/16 -18 x 2 SHLDR ROHS	
4	561197	PLASTIC PIVOT SADDLE	Includes nylock nut
5	202117	5/16-18 NYLOCK NUT THICK BLK	
6	102259-001	BHCS M5 X .8 X 12 BLK W/PL	
7	230494	M5-30 BTTN HD SOC C/S BLK	
8	052054	BUSHING PIVOT HANGER SWING I/O	
10	561062	1" INSERT PLUG .065 RIBS	
6,9,11	120976	ASSY LATCH BLOCK ANTI LIFT	
1A,2A,3-11	101155S	80D FM SWNG I/O HNGR ASSY R	RIGHT
1B,2B,3-11	101156S	80D FM SWNG I/O HNGR ASSY L	LEFT
		Ship assembled part #	Use with multiple assemblies
	ASSY-HNG-FP	HANGER/FOOTPLATE ASSY REQUIRED	add with Hanger & Footplate kit

90 DEG FRONT MOUNT HANGER SWING IN-OUT

NOTE: Effective on LX/LXI as of 10/24/2008.

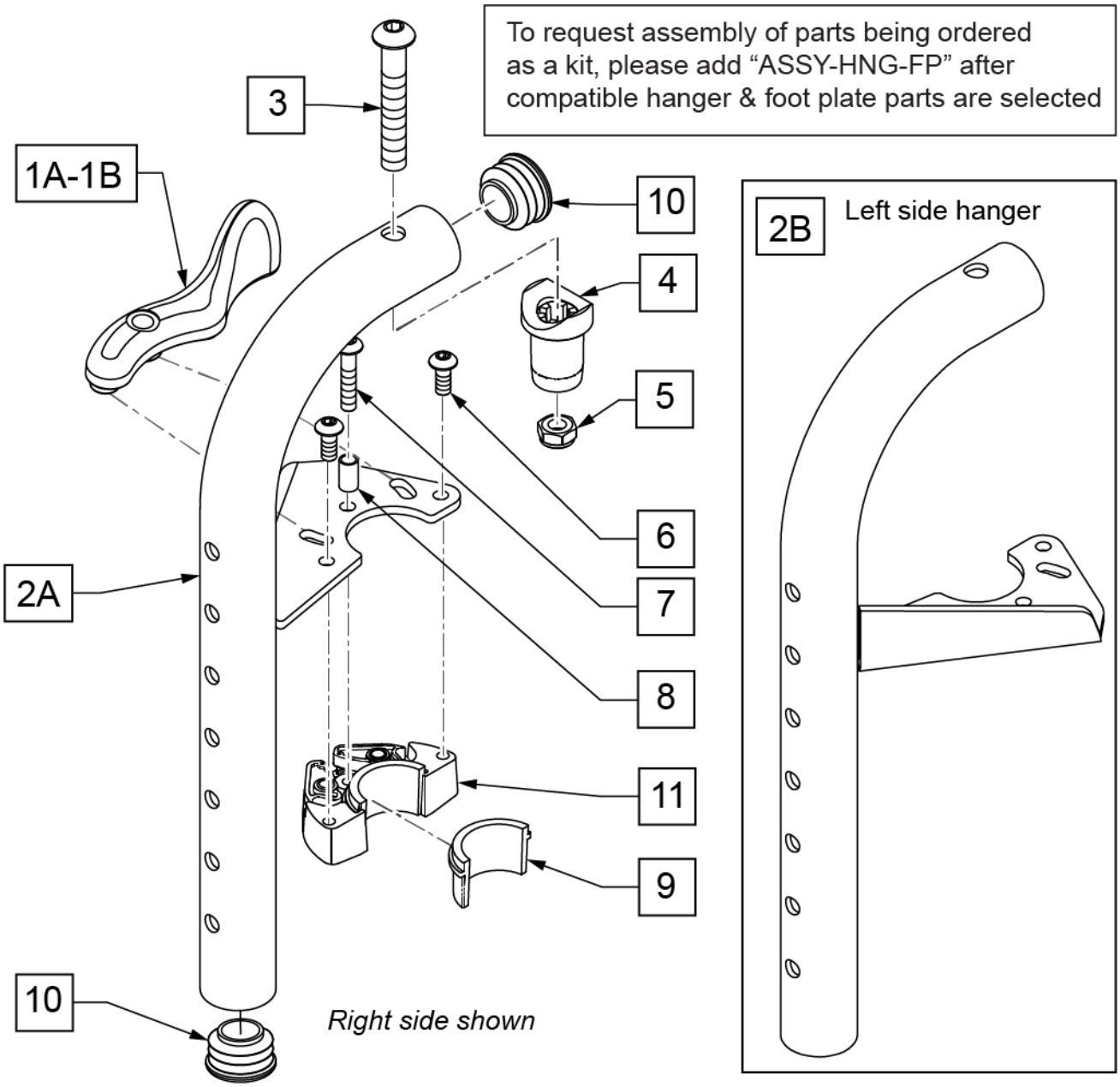

Pos.	Item Number	Description	Remarks
1A	052297	SWING I/O LATCH LEVER L w/ PINS	Used on Right Side 90D Swing I/O Hanger only
1B	052296	SWING I/O LATCH LEVER R w/ PINS	Used on Left Side 90D Swing I/O Hanger only
3	106983	BHCS 5/16 -18 x 2 SHLDR ROHS	
4	561197	PLASTIC PIVOT SADDLE	
5	202117	5/16-18 NYLOCK NUT THICK BLK	
6	102259-001	BHCS M5 x .8 x 12 W /PL INORG	
7	230494	M5-30 BTTN HD SOC C/S BLK	
8	052054	BUSHING PIVOT HANGER SWING I/O	
10	561062	1" INSERT PLUG .065 RIBS	
6,9,11	120976	ASSY LATCH BLOCK ANTI LIFT	
1A,2A,3-11	101157S	90D FM SWNG I/O HNGR ASSY R	RIGHT
1B,2B,3-11	101158S	90D FM SWNG I/O HNGR ASSY L	LEFT
		Ship assembled part #	Use with multiple assemblies
	ASSY-HNG-FP	HANGER/FOOTPLATE ASSY REQUIRED	add with Hanger & Footplate kit

FRONT MOUNT HANGER EXT

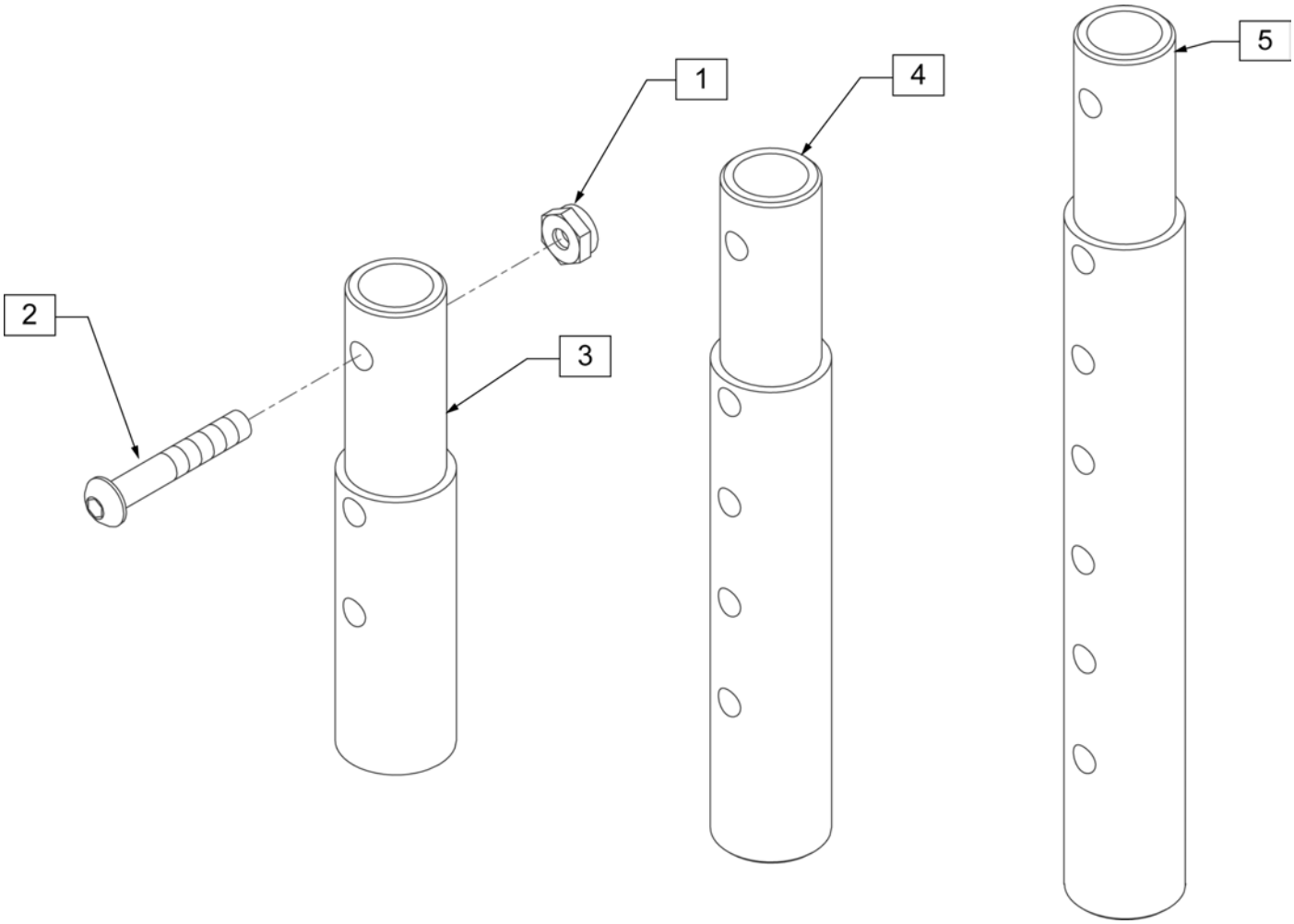

Pos.	Item Number	Description	Remarks
1	106935	NUT NYLOCK THIN 1/4 -28 ROHS	
2	106961	BHCS 1/4 -28 x 1 1/4 ROHS	
1-3	111505	2" FOOTREST EXTENSION TUBE W/ HDWR ASSM	2" EXT (PAIR)
1, 2, 4	111506	4" FOOTREST EXTENSION TUBE W/ HDWR ASSM	4" EXT (PAIR)
1, 2, 5	111507	6" FOOTREST EXTENSION TUBE W/ HDWR ASSM	6" EXT (PAIR)

KIDS ANGLE ADJ FOOTPLATE FRONT MOUNT

[02/20/2019]

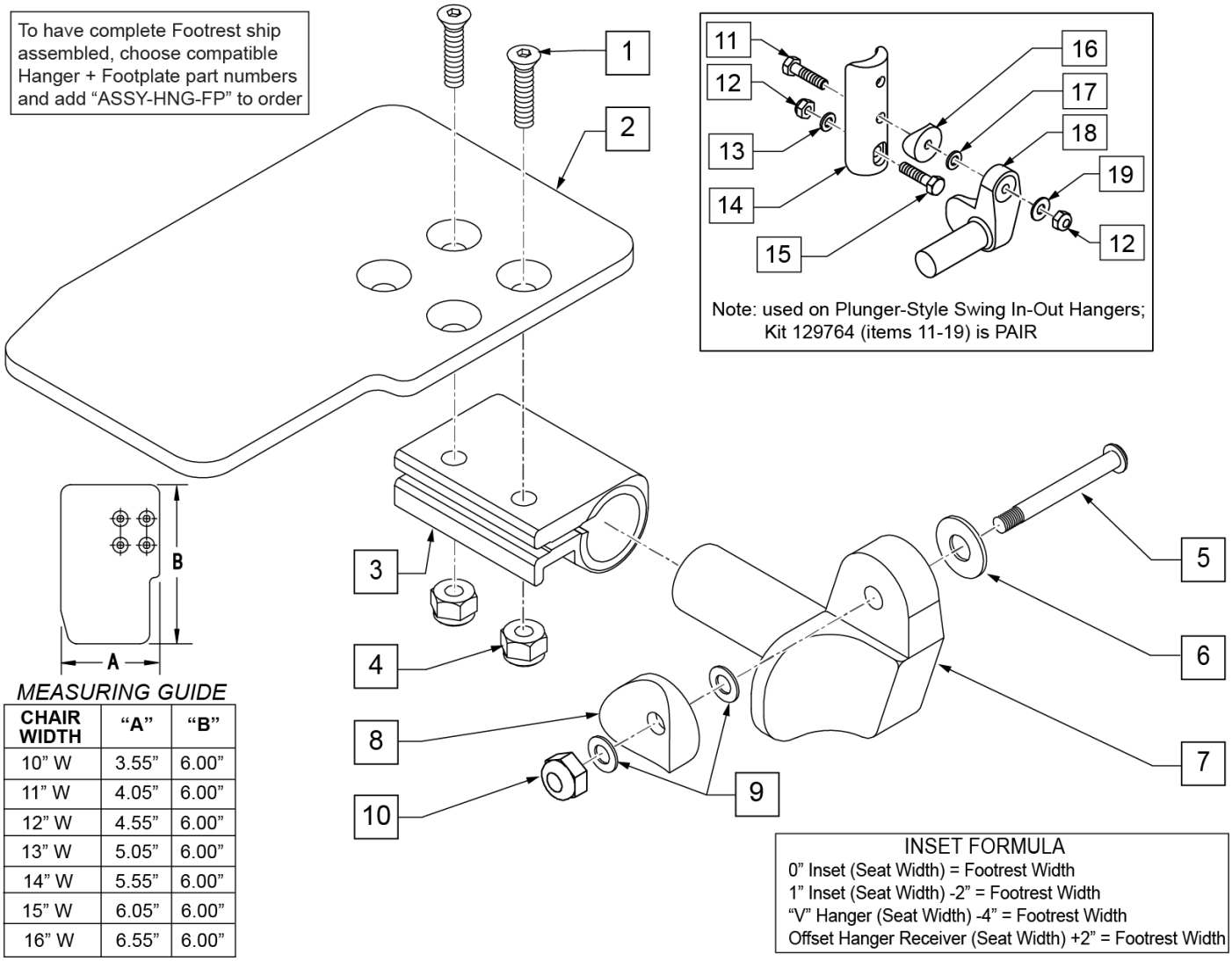

MEASURING GUIDE

CHAIR WIDTH	“A”	“B”
10” W	3.55”	6.00”
11” W	4.05”	6.00”
12” W	4.55”	6.00”
13” W	5.05”	6.00”
14” W	5.55”	6.00”
15” W	6.05”	6.00”
16” W	6.55”	6.00”

Pos.	Item Number	Description	Remarks
1	106978	FHCS 1/4-28 X 7/8 ROHS	
2	500635	KIDS ANGL ADJ F/PLT 10	RIGHT
2	500636	KIDS ANGL ADJ F/PLT 10	LEFT
2	500637	KIDS ANGL ADJ F/PLT 11	RIGHT
2	500638	KIDS ANGL ADJ F/PLT 11	LEFT
2	500639	KIDS ANGL ADJ F/PLT 12	RIGHT
2	500640	KIDS ANGL ADJ F/PLT 12	LEFT
2	500641	KIDS ANGL ADJ F/PLT 13	RIGHT
2	500642	KIDS ANGL ADJ F/PLT 13	LEFT
2	500643	KIDS ANGL ADJ F/PLT 14	RIGHT
2	500644	KIDS ANGL ADJ F/PLT 14	LEFT
2	500645	KIDS ANGL ADJ F/PLT 15	RIGHT
2	500646	KIDS ANGL ADJ F/PLT 15	LEFT
2	500647	KIDS ANGL ADJ F/PLT 16	RIGHT
2	500648	KIDS ANGL ADJ F/PLT 16	LEFT
3	550350	3/4 CLAMP ADJ FOOTPLATE	
4	106935	NUT NYLOCK THIN 1/4-28 ROHS	
5	226147	1/4-28 X 1.85 BH C/S BLK ZN	

Pos.	Item Number	Description	Remarks
6	106945	WASHER FLAT SAE 1/4 ROHS	
7	541000	FTRST MOUNTING BRKT 1/2" RAD R	RIGHT
7	541001	FTRST MOUNTING BRKT 1/2" RAD L	LEFT
8	561004	1 SADDLE 1/4 HOLE	
9	106943	WASHER FLAT THIN AN 1/4	
10	106941	NUT AUTOMATION 1/4-28 ROHS	
11	102268-001	HHCS M6 X 1 X 25	
12	132626	NUT AUTOMATION M6 X 1.0 ROHS	
13	107383	WASHER FLAT M6 ROHS	
15	118198	HHCS M6 X 1 X 40 PART NP	
16	561004	1" SADDLE 1/4" HOLE	
17	106943	WASHER FLAT AN 1/4 ROHS	
19	106945	WASHER FLAT SAE 1/4 ROHS	
1-4	158632	KAA F/PLT KIT 10 RT	RIGHT; used with Front Mount Adapter Kit on Plunger-Style Swing In/Out Hangers
1-4	158633	KAA F/PLT KIT 10 LT	LEFT; used with Front Mount Adapter Kit on Plunger-Style Swing In/Out Hangers
1-4	158634	KAA F/PLT KIT 11 RT	RIGHT; used with Front Mount Adapter Kit on Plunger-Style Swing In/Out Hangers
1-4	158635	KAA F/PLT KIT 11 LT	LEFT; used with Front Mount Adapter Kit on Plunger-Style Swing In/Out Hangers
1-4	158636	KAA F/PLT KIT 12 RT	RIGHT; used with Front Mount Adapter Kit on Plunger-Style Swing In/Out Hangers
1-4	158637	KAA F/PLT KIT 12 LT	LEFT; used with Front Mount Adapter Kit on Plunger-Style Swing In/Out Hangers
1-4	158638	KAA F/PLT KIT 13 RT	RIGHT; used with Front Mount Adapter Kit on Plunger-Style Swing In/Out Hangers
1-4	158639	KAA F/PLT KIT 13 LT	LEFT; used with Front Mount Adapter Kit on Plunger-Style Swing In/Out Hangers
1-4	158640	KAA F/PLT KIT 14 RT	RIGHT; used with Front Mount Adapter Kit on Plunger-Style Swing In/Out Hangers
1-4	158641	KAA F/PLT KIT 14 LT	LEFT; used with Front Mount Adapter Kit on Plunger-Style Swing In/Out Hangers
1-4	158642	KAA F/PLT KIT 15 RT	RIGHT; used with Front Mount Adapter Kit on Plunger-Style Swing In/Out Hangers
1-4	158643	KAA F/PLT KIT 15 LT	LEFT; used with Front Mount Adapter Kit on Plunger-Style Swing In/Out Hangers
1-4	158644	KAA F/PLT KIT 16 RT	RIGHT; used with Front Mount Adapter Kit on Plunger-Style Swing In/Out Hangers
1-4	158645	KAA F/PLT KIT 16 LT	LEFT; used with Front Mount Adapter Kit on Plunger-Style Swing In/Out Hangers
1-10	828821	KIDS ANG ADJ F/PLT ASSM 10	RIGHT; used with Old-Style Latch Block Swing In/Out & S/A Hangers
1-10	828822	KIDS ANG ADJ F/PLT ASSM 10	LEFT; used with Old-Style Latch Block Swing In/Out & S/A Hangers
1-10	828823	KIDS ANG ADJ F/PLT ASSM 11	RIGHT; used with Old-Style Latch Block Swing In/Out & S/A Hangers
1-10	828824	KIDS ANG ADJ F/PLT ASSM 11	LEFT; used with Old-Style Latch Block Swing In/Out & S/A Hangers
1-10	828825	KIDS ANG ADJ F/PLT ASSM 12	RIGHT; used with Old-Style Latch Block Swing In/Out & S/A Hangers
1-10	828826	KIDS ANG ADJ F/PLT ASSM 12	LEFT; used with Old-Style Latch Block Swing In/Out & S/A Hangers
1-10	828827	KIDS ANG ADJ F/PLT ASSM 13	RIGHT; used with Old-Style Latch Block Swing In/Out & S/A Hangers
1-10	828828	KIDS ANG ADJ F/PLT ASSM 13	LEFT; used with Old-Style Latch Block Swing In/Out & S/A Hangers
1-10	828829	KIDS ANG ADJ F/PLT ASSM 14	RIGHT; used with Old-Style Latch Block Swing In/Out & S/A Hangers
1-10	828830	KIDS ANG ADJ F/PLT ASSM 14	LEFT; used with Old-Style Latch Block Swing In/Out & S/A Hangers
1-10	828831	KIDS ANG ADJ F/PLT ASSM 15	RIGHT; used with Old-Style Latch Block Swing In/Out & S/A Hangers
1-10	828832	KIDS ANG ADJ F/PLT ASSM 15	LEFT; used with Old-Style Latch Block Swing In/Out & S/A Hangers

Pos.	Item Number	Description	Remarks
1-10	828833	KIDS ANG ADJ F/PLT ASSM 16	RIGHT; used with Old-Style Latch Block Swing In/Out & S/A Hangers
1-10	828834	KIDS ANG ADJ F/PLT ASSM 16	LEFT; used with Old-Style Latch Block Swing In/Out & S/A Hangers
1-10	921226	KIDS ANG ADJ F/PLT ASSM 10	PAIR; used with Old-Style Latch Block Swing In/Out & S/A Hangers
1-10	921227	KIDS ANG ADJ F/PLT ASSM 11	PAIR; used with Old-Style Latch Block Swing In/Out & S/A Hangers
1-10	921228	KIDS ANG ADJ F/PLT ASSM 12	PAIR; used with Old-Style Latch Block Swing In/Out & S/A Hangers
1-10	921229	KIDS ANG ADJ F/PLT ASSM 13	PAIR; used with Old-Style Latch Block Swing In/Out & S/A Hangers
1-10	921230	KIDS ANG ADJ F/PLT ASSM 14	PAIR; used with Old-Style Latch Block Swing In/Out & S/A Hangers
1-10	921231	KIDS ANG ADJ F/PLT ASSM 15	PAIR; used with Old-Style Latch Block Swing In/Out & S/A Hangers
1-10	921232	KIDS ANG ADJ F/PLT ASSM 16	PAIR; used with Old-Style Latch Block Swing In/Out & S/A Hangers
11-19	129764	AAA FRNT MNT ADAPTER KIT PR	AAA FRNT MNT fits both Kids and Adult Angle Adjustable Footplates
		Ship assembled part #	Use with multiple assemblies
	ASSY-HNG-FP	HANGER/FOOTPLATE ASSY REQUIRED	add with Hanger & Footplate kit

ADULT ANGLE-ADJ FOOTPLATE FRONT MOUNT

Note: for QX Series or SR45 footplate replacement parts see the ordering guide marked specifically for these two models in the informations panel.

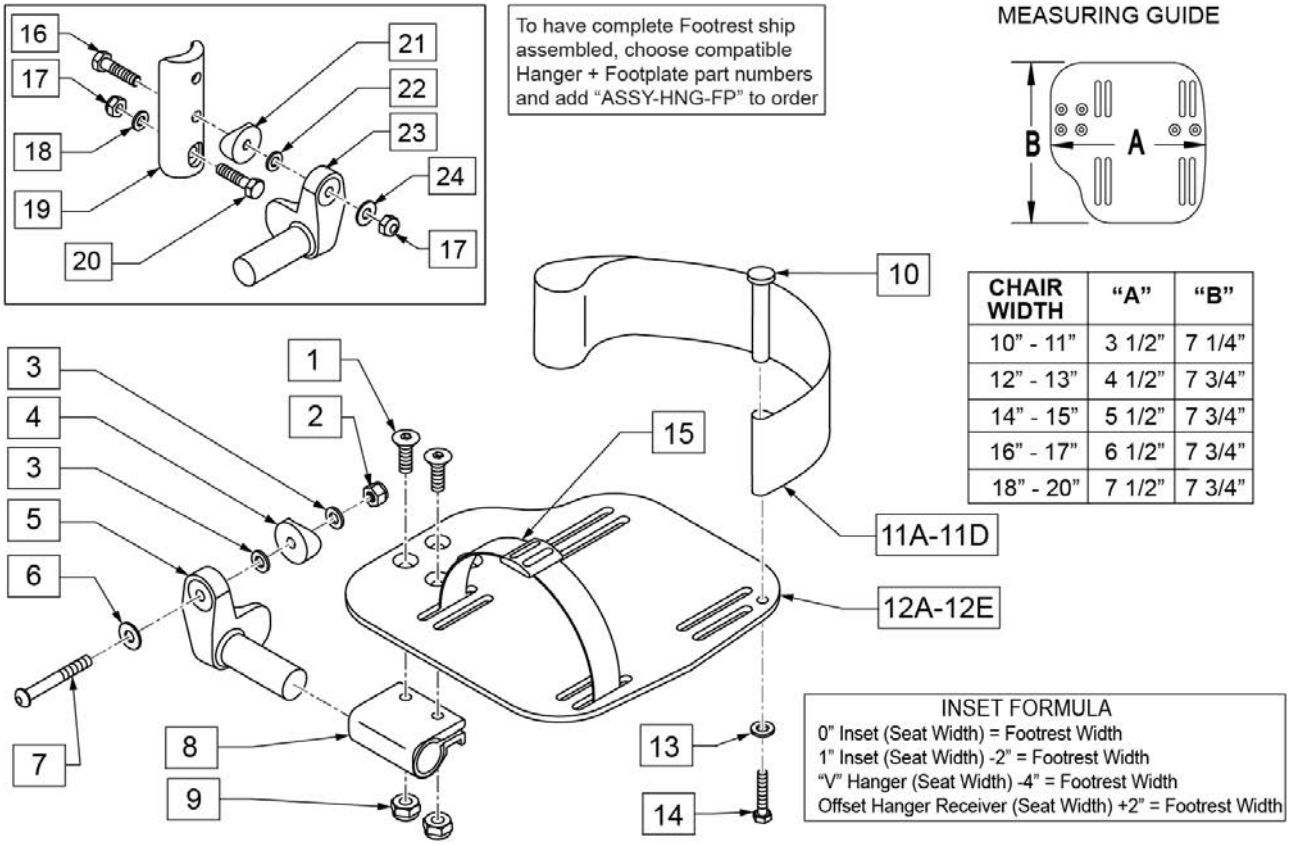

CHAIR WIDTH	"A"	"B"
10" - 11"	3 1/2"	7 1/4"
12" - 13"	4 1/2"	7 3/4"
14" - 15"	5 1/2"	7 3/4"
16" - 17"	6 1/2"	7 3/4"
18" - 20"	7 1/2"	7 3/4"

Pos.	Item Number	Description	Remarks
1	106978	FHCS 1/4-28 X 7/8	
2	106934	NUT NYLOCK 1/4-28	
3	106944	WASHER FLAT THIN AN 1/4	
4	561004	Q2 SADDLE	
5	541000	FTRST MOUNTING BRKT 1/2" RAD R	Right
5	541001	FTRST MOUNTING BRKT 1/2" RAD L	Left
6	106945	WASHER FLAT SAE 1/4 ROHS	
7	106964	BHCS 1/4-28 X 2	
8	550350	3/4 CLMP ADJ FT PLT	
9	106935	NUT NYLOCK THIN 1/4-28 ROHS	
10	561040	HEEL LOOP PEG	
11A	104380-001	ADJ FOOTREST STRAP 14W	Used on 10"-13" wide
11B	104380-002	ADJ FOOTREST STRAP 15-16W	Used on 14"-15" wide
11C	104380-003	ADJ FOOTREST STRAP 17-18W	Used on 16"-17" wide
11D	104380-004	ADJ FOOTREST STRAP 19-20W	Used on 18"-20" wide
12A	500656	ADULT ANGL ADJ F/PLT 10/11	Right; 10"-11" wide
12A	500657	ADULT ANGL ADJ F/PLT 10/11	Left; 10"-11" wide

Pos.	Item Number	Description	Remarks
12B	500658	ADULT ANGL ADJ F/PLT 12/13	Right; 12"-13" wide
12B	500659	ADULT ANGL ADJ F/PLT 12/13	Left; 12"-13" wide
12C	500660	ADULT ANGL ADJ F/PLT 14/15	Right; 14"-15" wide
12C	500661	ADULT ANGL ADJ F/PLT 14/15	Left; 14"-15" wide
12D	500662	ADULT ANGL ADJ F/PLT 16/17	Right; 16"-17" wide
12D	500663	ADULT ANGL ADJ F/PLT 16/17	Left; 16"-17" wide
12E	500664	ADULT ANGL ADJ F/PLT 18-20	Right; 18"-22" wide
12E	500665	ADULT ANGL ADJ F/PLT 18-20	Left; 18"-22" wide
13	107383	WASHER FLAT M6 ROHS	
14	102268-001	HHCS M6 X 1 X 25	
15	740260	TOE-ANKLE STRAP ADJ ADULT FOOTPLATE	
16	102268-001	HHCS M6 X 1 X 25	
17	132626	NUT AUTOMATION M6 X 1	
18	107383	WASHER FLAT M6 ROHS	
20	118198	HHCS M6X1X40 PART NP	
21	561004	Q2 SADDLE	
22	106943	WASHER FLAT AN 1/4 ROHS	
24	106945	WASHER FLAT SAE 1/4 ROHS	
16-24	129764	AAA FRNT MNT ADAPTER KIT PR	Pair; fits both Kids & Adult Angle Adj Footplates
1,8-10,11A,12A,13,14	129765	AAA F/PLT KIT 10-11 RT	Right; used w/ 129764 on Plunger-Style Swing In/Out Hangers
1,8-10,11A,12A,13,14	129766	AAA F/PLT KIT 10-11 LFT	Left; used w/ 129764 on Plunger-Style Swing In/Out Hangers
1,8-10,11A,12B,13,14	129767	AAA F/PLT KIT 12-13 RT	Right; used w/ 129764 on Plunger-Style Swing In/Out Hangers
1,8-10,11A,12B,13,14	129768	AAA F/PLT KIT 12-13 LFT	Left; used w/ 129764 on Plunger-Style Swing In/Out Hangers
1,8-10,11B,12C,13,14	129769	AAA F/PLT KIT 14-15 RT	Right; used w/ 129764 on Plunger-Style Swing In/Out Hangers
1,8-10,11B,12C,13,14	129770	AAA F/PLT KIT 14-15 LFT	Left; used w/ 129764 on Plunger-Style Swing In/Out Hangers
1,8-10,11C,12D,13,14	129771	AAA F/PLT KIT 16-17 RT	Right; used w/ 129764 on Plunger-Style Swing In/Out Hangers
1,8-10,11C,12D,13,14	129772	AAA F/PLT KIT 16-17 LFT	Left; used w/ 129764 on Plunger-Style Swing In/Out Hangers
1,8-10,11D,12E,13,14	129773	AAA F/PLT KIT 18-20 RT	Right; used w/ 129764 on Plunger-Style Swing In/Out Hangers
1,8-10,11D,12E,13,14	129774	AAA F/PLT KIT 18-20 LFT	Left; used w/ 129764 on Plunger-Style Swing In/Out Hangers
1-10,11A,12B	111514	AAA FTPLT 90D 12/13 " R	Right; used w/ Old-Style Latch Block Swing In/Out & S/A Hngrs
1-10,11A,12B	111515	AAA FTPLT 90D 12/13" L	Left; used w/ Old-Style Latch Block Swing IO & S/A Hngrs
1-10,11B,12C	111516	AAA FTPLT 90D 14/15" R	Right; used w/ Old-Style Latch Block Swing In/Out & S/A Hngrs
1-10,11B,12C	111517	AAA FTPLT 90D 14/15" L	Left; used w/ Old-Style Latch Block Swing IO & S/A Hngrs
1-10,11C,12D	111518	AAA FTPLT 90D 16/17" R	Right; used w/ Old-Style Latch Block Swing In/Out & S/A Hngrs
1-10,11C,12D	111519	AAA FTPLT 90D 16/17" L	Left; used w/ Old-Style Latch Block Swing IO & S/A Hngrs
1-10,11D,12E	111520	AAA FTPLT 90D 18/20" R	Right; used w/ Old-Style Latch Block Swing In/Out & S/A Hngrs
1-10,11D,12E	111521	AAA FTPLT 90D 18/20" L	Left; used w/ Old-Style Latch Block Swing IO & S/A Hngrs
		Ship assembled part #	Use with multiple assemblies
	ASSY-HNG-FP	HANGER/FOOTPLATE ASSY REQUIRED	add with Hanger & Footplate kit

90 DEG FOOTBOARD

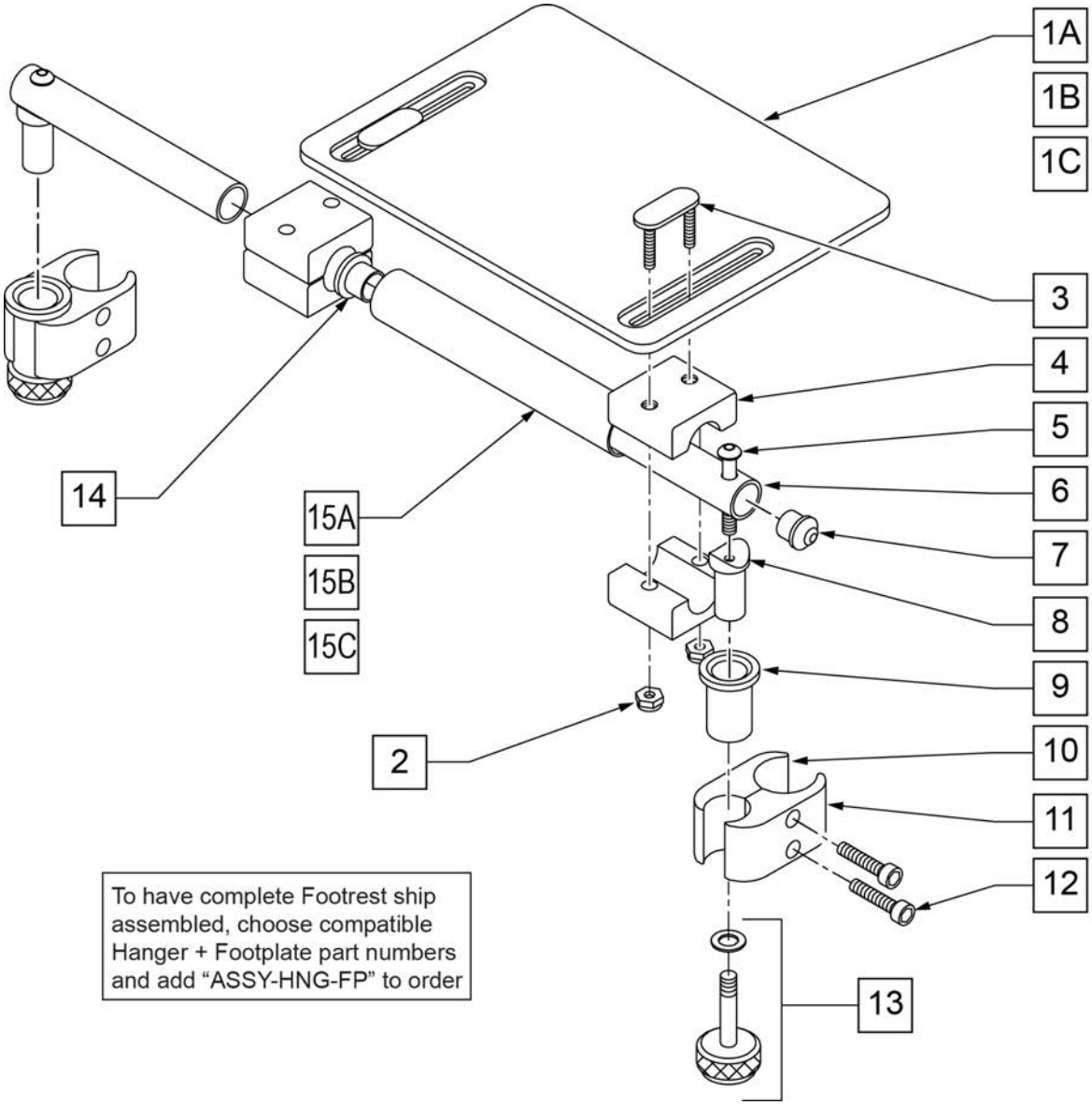

Pos.	Item Number	Description	Remarks
1A	562610	SLD FOOTPLATE ONLY 8" x 8" (10"-12" W)	10 -12" WIDE
1B	562612	SLD FOOTPLATE ONLY 10" x 8" (13"-14" W)	13 -14" WIDE
1C	500709	SLD FT PLT ALUM ONLY 12" x 8" (15"-16" W)	15 -16" WIDE
2	106933	NUT NYLOCK THIN 1/4-20 ROHS	
3	330120	SLD FT/ANGLE ADJ DOUBLE T BOLT	
4	550444	SOLID FOOT/ANG ADJ CLAMP BLK	
5	107028	BHCS 1/4-28 X 1-1/2 ROHS	
7	561034	SHORT DOME PLUG	
8	483236	SOLID FOOT INSERT SADDLE BLK	
10	550658	CLAMP 1 1/4" THREADED BLK	
11	550657	CLAMP 1 1/4" RECESS FULL BLK	
12	107032	SHCS 1/4-28 X 1 ROHS	
9,13	880559	SOLID FOOT LOCK KNOB ASSEMBLY	
14	560402	3/4" ID NY-LINER	
15A	521621	SLD FOOT SUPPORT TUBE BLK 10"-12"	10 -12" WIDE

Pos.	Item Number	Description	Remarks
15B	521622	SLD FOOT SUPPORT TUBE BLK 13"-14"	13 -14" WIDE
15C	521624	SLD FOOT SUPPORT TUBE BLK 15"-16"	15 -16" WIDE
5-8	880183	SLD FT PLT PIVOT TUBE SUB-ASSM	
1A,2-14, 15A	921801	SLD FT PLT ASSEMBLY 8" x 8" (10"-12" W)	10 -12" WIDE
1B,2-14, 15B	921803	SOLID FOOTPLATE ASSEMBLY 10" x 8" (13"-14" W)	13 -14" WIDE
1C,2-14, 15C	921805	SOLID FOOTPLATE ASSEMBLY12" x 8" (15"-16" W)	15 -16" WIDE
		Ship assembled part #	Use with multiple assemblies
	ASSY-HNG-FP	HANGER/FOOTPLATE ASSY REQUIRED	add with Hanger & Footplate kit

70 DEG FRONT MOUNT SWING IN/OUT HANGER

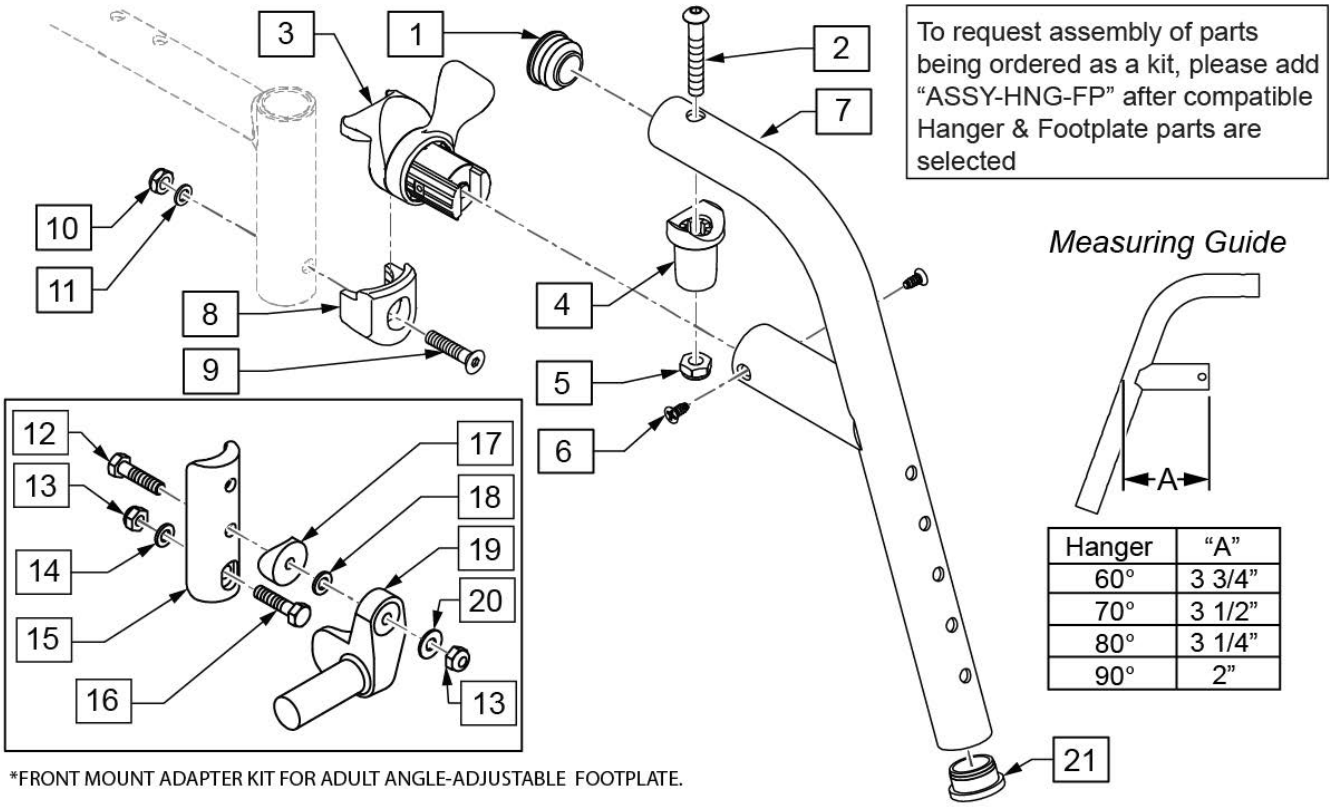

Pos.	Item Number	Description	Remarks
1	561062	1" INSERT PLUG .065 RIBS	
2	226217	5/16-18 X 2" BH C/S BLK	
4	561197	PLASTIC PIVOT SADDLE	
5	202102	5/16-18 NYLOCK NUT THIN	
6	118695	#8 LOW FLT HD TAP SCREW	
9	103500-010	FHCSM6X1X35FULLNP	
10	104381	NUT HEX NYLOCK M6X1.0	
11	104414	WAVE WASHER 6 MM	
12	102268-001	HHCS M6 X 1 X 25	
13	104381	NUT HEX NYLOCK M6 X 1	
14	107383	WASHER FLAT M6 ROHS	
15	119240	FOOTPLATE ADAPTER FM	3" tall
16	118198	HHCS M6X1X40 PART NP	
17	561004	1" SADDLE 1/4" HOLE	
18	106943	WASHER FLAT AN 1/4 ROHS	
19	541000	FOOTREST MOUNTING BRKT 1/2" RAD R	Right
19	541001	FOOTREST MOUNTING BRKT 1/2" RAD L	Left
20	106945	WASHER FLAT SAE 1/4 ROHS	
1,2,4,5	119518	PIVOT SADDLE KIT	
1-7	119456S	70 D FRNT MNT SWING IN/OUT HANGER L	Left
1-7	119457S	70 D FRNT MNT SWING IN/OUT HANGER R	Right
8-11	119514	LATCH RECEIVER KIT	
3,6	119509	HANGER LATCH ASSM W/HDWR L	Left
3,6	119510	HANGER LATCH ASSM W/HDWR R	Right
12-20	129764	AAA FRNT MNT ADAPTER KIT PR	Pair
21	561002	1" INSERT PLUG .083	

Pos.	Item Number	Description	Remarks
		Ship assembled part #	Use with multiple assemblies
	ASSY-HNG-FP	HANGER/FOOTPLATE ASSY REQUIRED	add with Hanger & Footplate kit

80 DEG FRONT MOUNT SWING IN/OUT HANGER

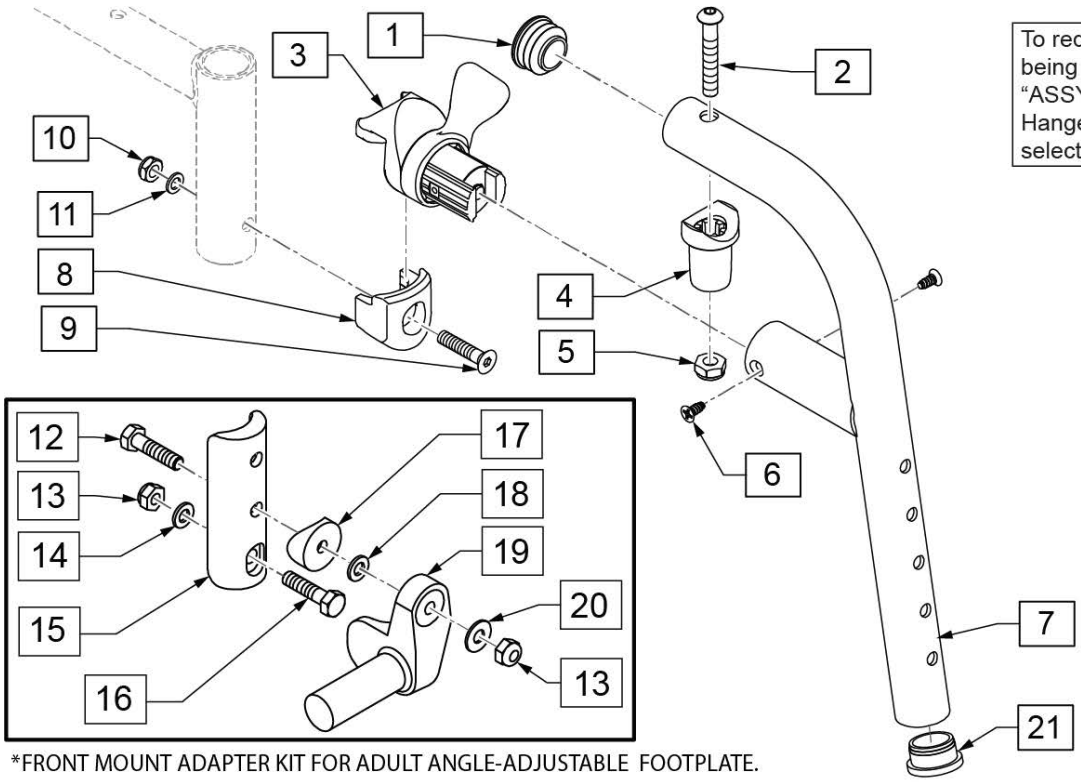

To request assembly of parts being ordered as a kit, please add "ASSY-HNG-FP" after compatible Hanger & Footplate parts are selected

Measuring Guide

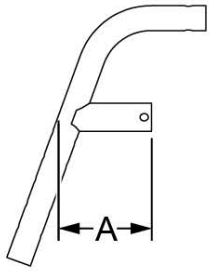

Hanger	"A"
60°	3 3/4"
70°	3 1/2"
80°	3 1/4"
90°	2"

*FRONT MOUNT ADAPTER KIT FOR ADULT ANGLE-ADJUSTABLE FOOTPLATE.

Pos.	Item Number	Description	Remarks
1	561062	1" INSERT PLUG .065 RIBS	
2	226217	5/16-18 X 2" BH C/S BLK	
4	561197	PLASTIC PIVOT SADDLE	
5	202102	5/16-18 NYLOCK NUT THIN	
6	118695	#8 LOW FLT HD TAP SCREW	
9	103500-010	FHCSM6X1X35FULLNP	
10	104381	NUT HEX NYLOCK M6X1.0	
11	104414	WAVE WASHER 6 MM	
12	102268-001	HHCS M6 X 1 X 25	
13	104381	NUT HEX NYLOCK M6 X 1	
14	107383	WASHER FLAT M6 ROHS	
15	119240	FOOTPLATE ADAPTER FM	3" tall
16	118198	HHCS M6X1X40 PART NP	
17	561004	1" SADDLE 1/4" HOLE	
18	106944	WASHER FLAT AN 1/4 ROHS	
19	541000	FOOTREST MOUNTING BRKT 1/2" RAD R	Right
19	541001	FOOTREST MOUNTING BRKT 1/2" RAD L	Left
20	106944	WASHER FLAT SAE 1/4 ROHS	
1,2,4,5	119518	PIVOT SADDLE KIT	
1-7	119464S	80 D FRNT MNT SWING IN/OUT HANGER L	Left
1-7	119465S	80 D FRNT MNT SWING IN/OUT HANGER R	Right
8-11	119514	LATCH RECEIVER KIT	
3,6	119509	HANGER LATCH ASSM W/HDWR L	Left
3,6	119510	HANGER LATCH ASSM W/HDWR R	Right
21	561002	1" INSERT PLUG .083	
12-20	129764	AAA FRNT MNT ADAPTER KIT PR	Pair
21	561002	1" INSERT PLUG .083	

Pos.	Item Number	Description	Remarks
		Ship assembled part #	Use with multiple assemblies
	ASSY-HNG-FP	HANGER/FOOTPLATE ASSY REQUIRED	add with Hanger & Footplate kit

90 DEG FRONT MOUNT SWING IN/OUT HANGER

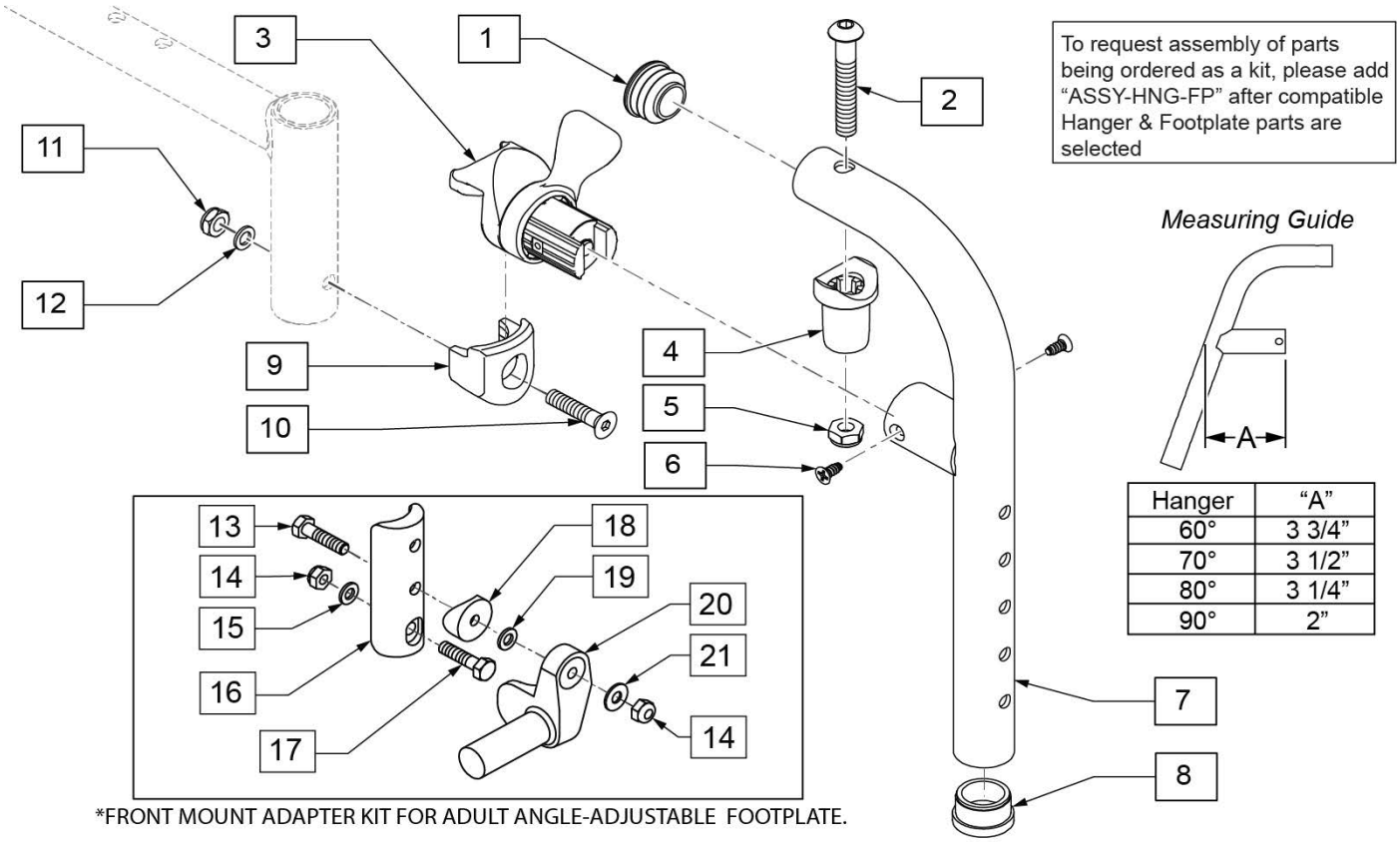

Pos.	Item Number	Description	Remarks
1	561062	1" INSERT PLUG .065 RIBS	
2	226217	5/16-18 X 2" BH C/S BLK	
4	561197	PLASTIC PIVOT SADDLE	
5	202102	5/16-18 NYLOCK NUT THIN	
6	118695	#8 LOW FLT HD TAP SCREW	
8	561002	1" INSERT PLUG .083	
10	103500-010	FHCSM6X1X35FULLNP	
11	104381	NUT HEX NYLOCK M6X1.0	
12	104414	WAVE WASHER 6 MM	
13	102268-001	HHCS M6 X 1 X 25	
14	104381	NUT HEX NYLOCK M6 X 1	
15	107383	WASHER FLAT M6 ROHS	
16	119240	FOOTPLATE ADAPTER FM	3" tall
17	118198	HHCS M6X1X40 PART NP	
18	561004	1" SADDLE 1/4" HOLE	
19	106943	WASHER FLAT AN 1/4 ROHS	
20	541000	FOOTREST MOUNTING BRKT 1/2" RAD R	Right
20	541001	FOOTREST MOUNTING BRKT 1/2" RAD L	Left
21	106945	WASHER FLAT SAE 1/4 ROHS	
1,2,4,5	119518	PIVOT SADDLE KIT	
1-7	129644S	90 D FRNT MNT SWING IN/OUT HANGER R	Right
1-7	129645S	90 D FRNT MNT SWING IN/OUT HANGER L	Left
9-12	119514	LATCH RECEIVER KIT	
3,6	119509	HANGER LATCH ASSM W/HDWR L	Left
3,6	119510	HANGER LATCH ASSM W/HDWR R	Right

Pos.	Item Number	Description	Remarks
13-21	129764	AAA FRNT MNT ADAPTER KIT PR	Pair
		Ship assembled part #	Use with multiple assemblies
	ASSY-HNG-FP	HANGER/FOOTPLATE ASSY REQUIRED	add with Hanger & Footplate kit

FRONT MOUNT HANGER EXT

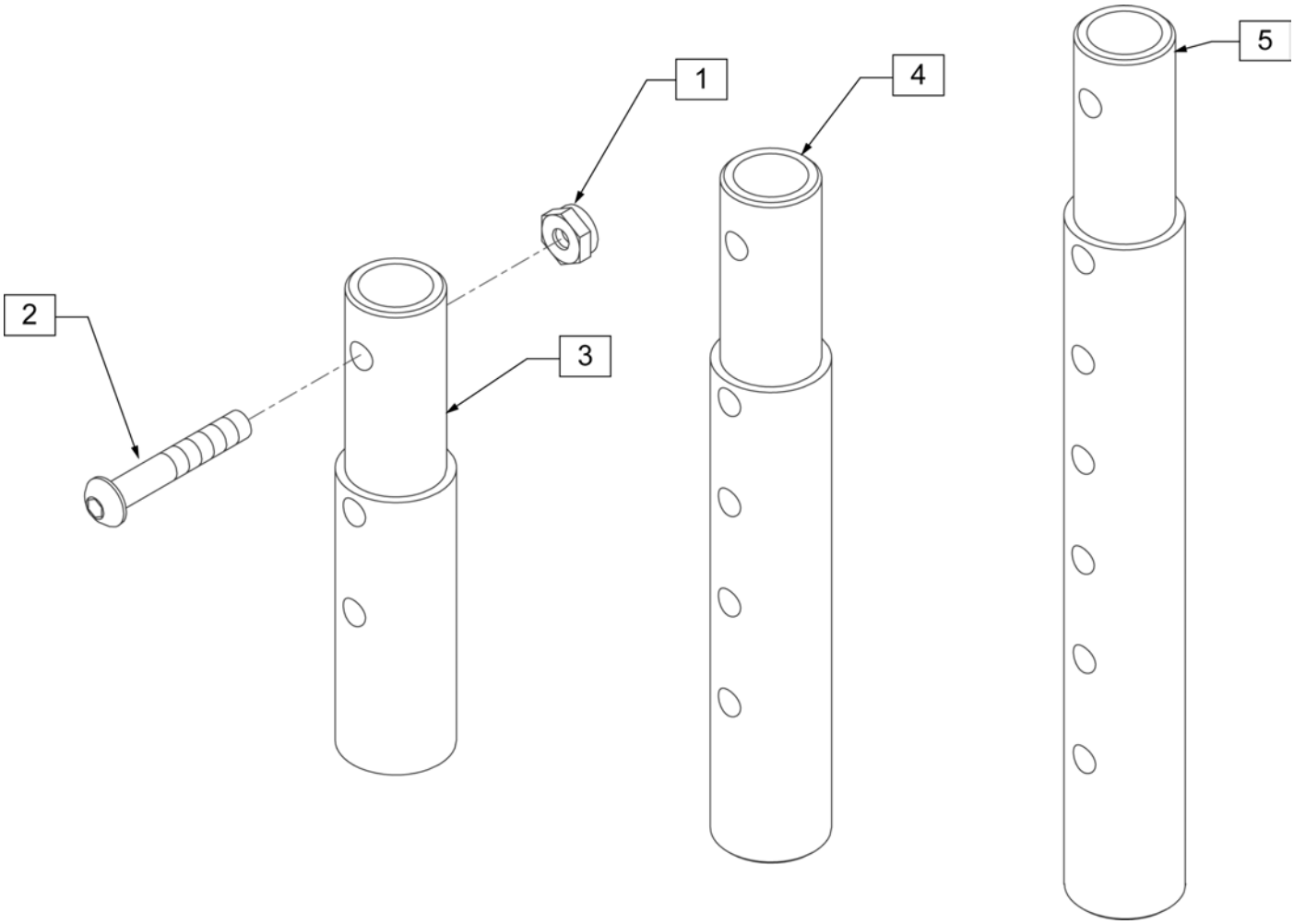

Pos.	Item Number	Description	Remarks
1	106935	NUT NYLOCK THIN 1/4 -28 ROHS	
2	106961	BHCS 1/4 -28 x 1 1/4 ROHS	
1-3	111505	2" FOOTREST EXTENSION TUBE W/ HDWR ASSM	2" EXT (PAIR)
1, 2, 4	111506	4" FOOTREST EXTENSION TUBE W/ HDWR ASSM	4" EXT (PAIR)
1, 2, 5	111507	6" FOOTREST EXTENSION TUBE W/ HDWR ASSM	6" EXT (PAIR)

KIDS ANGLE ADJ FOOTPLATE FRONT MOUNT

[02/20/2019]

To have complete Footrest ship assembled, choose compatible Hanger + Footplate part numbers and add “ASSY-HNG-FP” to order

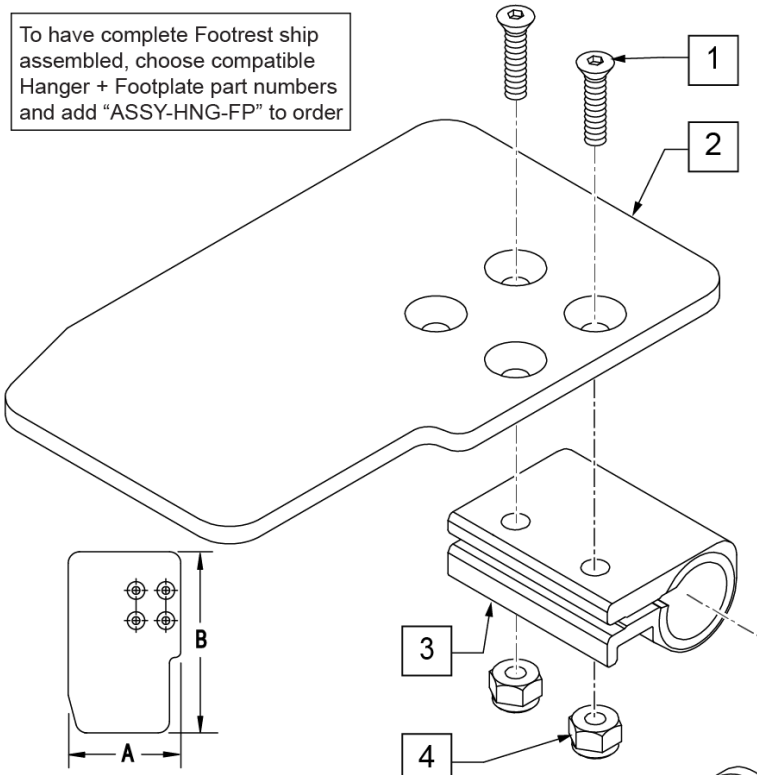

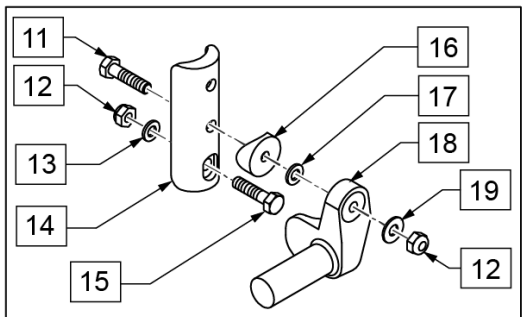

Note: used on Plunger-Style Swing In-Out Hangers; Kit 129764 (items 11-19) is PAIR

MEASURING GUIDE

CHAIR WIDTH	“A”	“B”
10” W	3.55”	6.00”
11” W	4.05”	6.00”
12” W	4.55”	6.00”
13” W	5.05”	6.00”
14” W	5.55”	6.00”
15” W	6.05”	6.00”
16” W	6.55”	6.00”

INSET FORMULA

0” Inset (Seat Width) = Footrest Width
1” Inset (Seat Width) -2” = Footrest Width
“V” Hanger (Seat Width) -4” = Footrest Width
Offset Hanger Receiver (Seat Width) +2” = Footrest Width

Pos.	Item Number	Description	Remarks
1	106978	FHCS 1/4-28 X 7/8 ROHS	
2	500635	KIDS ANGL ADJ F/PLT 10	RIGHT
2	500636	KIDS ANGL ADJ F/PLT 10	LEFT
2	500637	KIDS ANGL ADJ F/PLT 11	RIGHT
2	500638	KIDS ANGL ADJ F/PLT 11	LEFT
2	500639	KIDS ANGL ADJ F/PLT 12	RIGHT
2	500640	KIDS ANGL ADJ F/PLT 12	LEFT
2	500641	KIDS ANGL ADJ F/PLT 13	RIGHT
2	500642	KIDS ANGL ADJ F/PLT 13	LEFT
2	500643	KIDS ANGL ADJ F/PLT 14	RIGHT
2	500644	KIDS ANGL ADJ F/PLT 14	LEFT
2	500645	KIDS ANGL ADJ F/PLT 15	RIGHT
2	500646	KIDS ANGL ADJ F/PLT 15	LEFT
2	500647	KIDS ANGL ADJ F/PLT 16	RIGHT
2	500648	KIDS ANGL ADJ F/PLT 16	LEFT
3	550350	3/4 CLAMP ADJ FOOTPLATE	
4	106935	NUT NYLOCK THIN 1/4-28 ROHS	
5	226147	1/4-28 X 1.85 BH C/S BLK ZN	

Pos.	Item Number	Description	Remarks
6	106945	WASHER FLAT SAE 1/4 ROHS	
7	541000	FTRST MOUNTING BRKT 1/2" RAD R	RIGHT
7	541001	FTRST MOUNTING BRKT 1/2" RAD L	LEFT
8	561004	1 SADDLE 1/4 HOLE	
9	106943	WASHER FLAT THIN AN 1/4	
10	106941	NUT AUTOMATION 1/4-28 ROHS	
11	102268-001	HHCS M6 X 1 X 25	
12	132626	NUT AUTOMATION M6 X 1.0 ROHS	
13	107383	WASHER FLAT M6 ROHS	
15	118198	HHCS M6 X 1 X 40 PART NP	
16	561004	1" SADDLE 1/4" HOLE	
17	106943	WASHER FLAT AN 1/4 ROHS	
19	106945	WASHER FLAT SAE 1/4 ROHS	
1-4	158632	KAA F/PLT KIT 10 RT	RIGHT; used with Front Mount Adapter Kit on Plunger-Style Swing In/Out Hangers
1-4	158633	KAA F/PLT KIT 10 LT	LEFT; used with Front Mount Adapter Kit on Plunger-Style Swing In/Out Hangers
1-4	158634	KAA F/PLT KIT 11 RT	RIGHT; used with Front Mount Adapter Kit on Plunger-Style Swing In/Out Hangers
1-4	158635	KAA F/PLT KIT 11 LT	LEFT; used with Front Mount Adapter Kit on Plunger-Style Swing In/Out Hangers
1-4	158636	KAA F/PLT KIT 12 RT	RIGHT; used with Front Mount Adapter Kit on Plunger-Style Swing In/Out Hangers
1-4	158637	KAA F/PLT KIT 12 LT	LEFT; used with Front Mount Adapter Kit on Plunger-Style Swing In/Out Hangers
1-4	158638	KAA F/PLT KIT 13 RT	RIGHT; used with Front Mount Adapter Kit on Plunger-Style Swing In/Out Hangers
1-4	158639	KAA F/PLT KIT 13 LT	LEFT; used with Front Mount Adapter Kit on Plunger-Style Swing In/Out Hangers
1-4	158640	KAA F/PLT KIT 14 RT	RIGHT; used with Front Mount Adapter Kit on Plunger-Style Swing In/Out Hangers
1-4	158641	KAA F/PLT KIT 14 LT	LEFT; used with Front Mount Adapter Kit on Plunger-Style Swing In/Out Hangers
1-4	158642	KAA F/PLT KIT 15 RT	RIGHT; used with Front Mount Adapter Kit on Plunger-Style Swing In/Out Hangers
1-4	158643	KAA F/PLT KIT 15 LT	LEFT; used with Front Mount Adapter Kit on Plunger-Style Swing In/Out Hangers
1-4	158644	KAA F/PLT KIT 16 RT	RIGHT; used with Front Mount Adapter Kit on Plunger-Style Swing In/Out Hangers
1-4	158645	KAA F/PLT KIT 16 LT	LEFT; used with Front Mount Adapter Kit on Plunger-Style Swing In/Out Hangers
1-10	828821	KIDS ANG ADJ F/PLT ASSM 10	RIGHT; used with Old-Style Latch Block Swing In/Out & S/A Hangers
1-10	828822	KIDS ANG ADJ F/PLT ASSM 10	LEFT; used with Old-Style Latch Block Swing In/Out & S/A Hangers
1-10	828823	KIDS ANG ADJ F/PLT ASSM 11	RIGHT; used with Old-Style Latch Block Swing In/Out & S/A Hangers
1-10	828824	KIDS ANG ADJ F/PLT ASSM 11	LEFT; used with Old-Style Latch Block Swing In/Out & S/A Hangers
1-10	828825	KIDS ANG ADJ F/PLT ASSM 12	RIGHT; used with Old-Style Latch Block Swing In/Out & S/A Hangers
1-10	828826	KIDS ANG ADJ F/PLT ASSM 12	LEFT; used with Old-Style Latch Block Swing In/Out & S/A Hangers
1-10	828827	KIDS ANG ADJ F/PLT ASSM 13	RIGHT; used with Old-Style Latch Block Swing In/Out & S/A Hangers
1-10	828828	KIDS ANG ADJ F/PLT ASSM 13	LEFT; used with Old-Style Latch Block Swing In/Out & S/A Hangers
1-10	828829	KIDS ANG ADJ F/PLT ASSM 14	RIGHT; used with Old-Style Latch Block Swing In/Out & S/A Hangers
1-10	828830	KIDS ANG ADJ F/PLT ASSM 14	LEFT; used with Old-Style Latch Block Swing In/Out & S/A Hangers
1-10	828831	KIDS ANG ADJ F/PLT ASSM 15	RIGHT; used with Old-Style Latch Block Swing In/Out & S/A Hangers
1-10	828832	KIDS ANG ADJ F/PLT ASSM 15	LEFT; used with Old-Style Latch Block Swing In/Out & S/A Hangers

Pos.	Item Number	Description	Remarks
1-10	828833	KIDS ANG ADJ F/PLT ASSM 16	RIGHT; used with Old-Style Latch Block Swing In/Out & S/A Hangers
1-10	828834	KIDS ANG ADJ F/PLT ASSM 16	LEFT; used with Old-Style Latch Block Swing In/Out & S/A Hangers
1-10	921226	KIDS ANG ADJ F/PLT ASSM 10	PAIR; used with Old-Style Latch Block Swing In/Out & S/A Hangers
1-10	921227	KIDS ANG ADJ F/PLT ASSM 11	PAIR; used with Old-Style Latch Block Swing In/Out & S/A Hangers
1-10	921228	KIDS ANG ADJ F/PLT ASSM 12	PAIR; used with Old-Style Latch Block Swing In/Out & S/A Hangers
1-10	921229	KIDS ANG ADJ F/PLT ASSM 13	PAIR; used with Old-Style Latch Block Swing In/Out & S/A Hangers
1-10	921230	KIDS ANG ADJ F/PLT ASSM 14	PAIR; used with Old-Style Latch Block Swing In/Out & S/A Hangers
1-10	921231	KIDS ANG ADJ F/PLT ASSM 15	PAIR; used with Old-Style Latch Block Swing In/Out & S/A Hangers
1-10	921232	KIDS ANG ADJ F/PLT ASSM 16	PAIR; used with Old-Style Latch Block Swing In/Out & S/A Hangers
11-19	129764	AAA FRNT MNT ADAPTER KIT PR	AAA FRNT MNT fits both Kids and Adult Angle Adjustable Footplates
		Ship assembled part #	Use with multiple assemblies
	ASSY-HNG-FP	HANGER/FOOTPLATE ASSY REQUIRED	add with Hanger & Footplate kit

ADULT ANGLE-ADJ FOOTPLATE FRONT MOUNT

Note: for QX Series or SR45 footplate replacement parts see the ordering guide marked specifically for these two models in the informations panel.

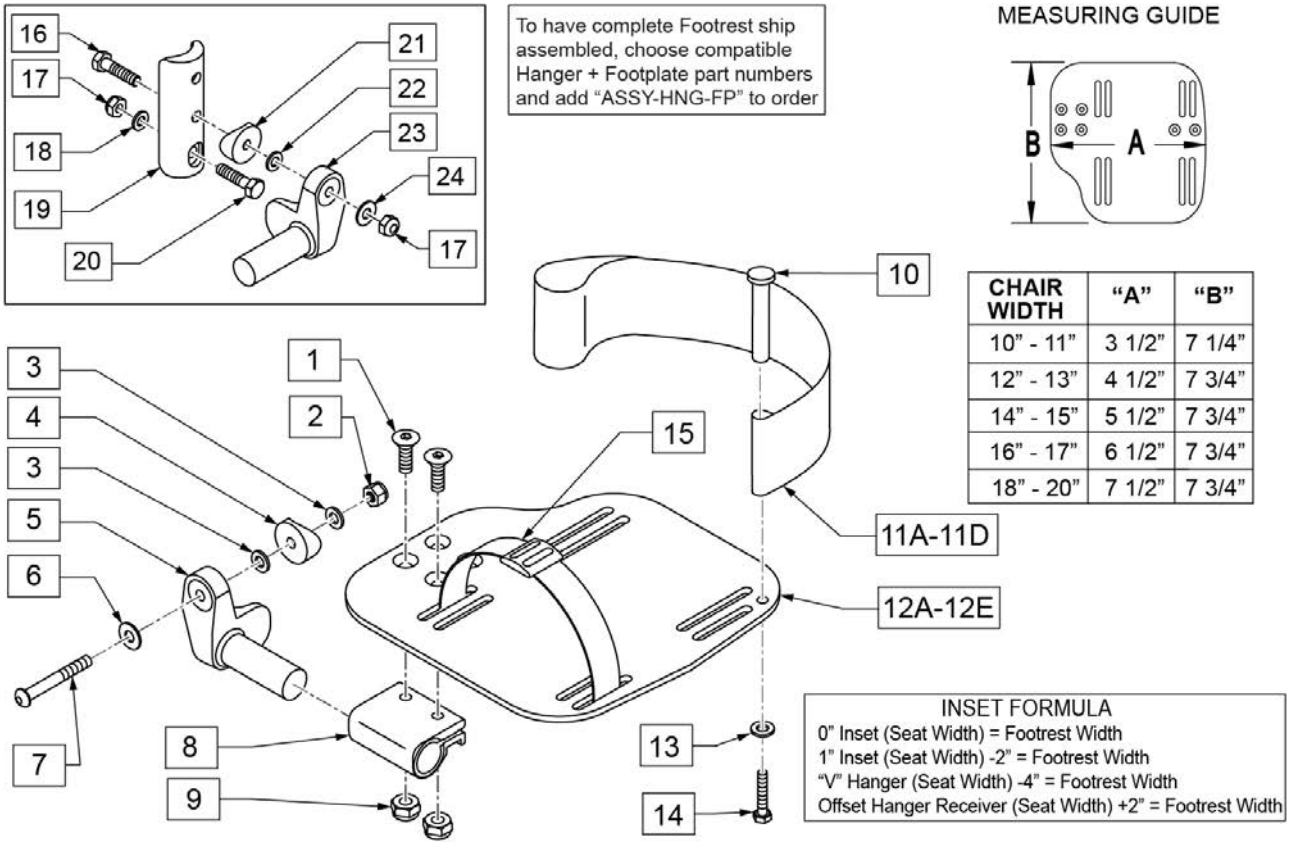

CHAIR WIDTH	"A"	"B"
10" - 11"	3 1/2"	7 1/4"
12" - 13"	4 1/2"	7 3/4"
14" - 15"	5 1/2"	7 3/4"
16" - 17"	6 1/2"	7 3/4"
18" - 20"	7 1/2"	7 3/4"

Pos.	Item Number	Description	Remarks
1	106978	FHCS 1/4-28 X 7/8	
2	106934	NUT NYLOCK 1/4-28	
3	106944	WASHER FLAT THIN AN 1/4	
4	561004	Q2 SADDLE	
5	541000	FTRST MOUNTING BRKT 1/2" RAD R	Right
5	541001	FTRST MOUNTING BRKT 1/2" RAD L	Left
6	106945	WASHER FLAT SAE 1/4 ROHS	
7	106964	BHCS 1/4-28 X 2	
8	550350	3/4 CLMP ADJ FT PLT	
9	106935	NUT NYLOCK THIN 1/4-28 ROHS	
10	561040	HEEL LOOP PEG	
11A	104380-001	ADJ FOOTREST STRAP 14W	Used on 10"-13" wide
11B	104380-002	ADJ FOOTREST STRAP 15-16W	Used on 14"-15" wide
11C	104380-003	ADJ FOOTREST STRAP 17-18W	Used on 16"-17" wide
11D	104380-004	ADJ FOOTREST STRAP 19-20W	Used on 18"-20" wide
12A	500656	ADULT ANGL ADJ F/PLT 10/11	Right; 10"-11" wide
12A	500657	ADULT ANGL ADJ F/PLT 10/11	Left; 10"-11" wide

Pos.	Item Number	Description	Remarks
12B	500658	ADULT ANGL ADJ F/PLT 12/13	Right; 12"-13" wide
12B	500659	ADULT ANGL ADJ F/PLT 12/13	Left; 12"-13" wide
12C	500660	ADULT ANGL ADJ F/PLT 14/15	Right; 14"-15" wide
12C	500661	ADULT ANGL ADJ F/PLT 14/15	Left; 14"-15" wide
12D	500662	ADULT ANGL ADJ F/PLT 16/17	Right; 16"-17" wide
12D	500663	ADULT ANGL ADJ F/PLT 16/17	Left; 16"-17" wide
12E	500664	ADULT ANGL ADJ F/PLT 18-20	Right; 18"-22" wide
12E	500665	ADULT ANGL ADJ F/PLT 18-20	Left; 18"-22" wide
13	107383	WASHER FLAT M6 ROHS	
14	102268-001	HHCS M6 X 1 X 25	
15	740260	TOE-ANKLE STRAP ADJ ADULT FOOTPLATE	
16	102268-001	HHCS M6 X 1 X 25	
17	132626	NUT AUTOMATION M6 X 1	
18	107383	WASHER FLAT M6 ROHS	
20	118198	HHCS M6X1X40 PART NP	
21	561004	Q2 SADDLE	
22	106943	WASHER FLAT AN 1/4 ROHS	
24	106945	WASHER FLAT SAE 1/4 ROHS	
16-24	129764	AAA FRNT MNT ADAPTER KIT PR	Pair; fits both Kids & Adult Angle Adj Footplates
1,8-10,11A,12A,13,14	129765	AAA F/PLT KIT 10-11 RT	Right; used w/ 129764 on Plunger- Style Swing In/Out Hangers
1,8-10,11A,12A,13,14	129766	AAA F/PLT KIT 10-11 LFT	Left; used w/ 129764 on Plunger- Style Swing In/Out Hangers
1,8-10,11A,12B,13,14	129767	AAA F/PLT KIT 12-13 RT	Right; used w/ 129764 on Plunger- Style Swing In/Out Hangers
1,8-10,11A,12B,13,14	129768	AAA F/PLT KIT 12-13 LFT	Left; used w/ 129764 on Plunger- Style Swing In/Out Hangers
1,8-10,11B,12C,13,14	129769	AAA F/PLT KIT 14-15 RT	Right; used w/ 129764 on Plunger- Style Swing In/Out Hangers
1,8-10,11B,12C,13,14	129770	AAA F/PLT KIT 14-15 LFT	Left; used w/ 129764 on Plunger- Style Swing In/Out Hangers
1,8-10,11C,12D,13,14	129771	AAA F/PLT KIT 16-17 RT	Right; used w/ 129764 on Plunger- Style Swing In/Out Hangers
1,8-10,11C,12D,13,14	129772	AAA F/PLT KIT 16-17 LFT	Left; used w/ 129764 on Plunger- Style Swing In/Out Hangers
1,8-10,11D,12E,13,14	129773	AAA F/PLT KIT 18-20 RT	Right; used w/ 129764 on Plunger- Style Swing In/Out Hangers
1,8-10,11D,12E,13,14	129774	AAA F/PLT KIT 18-20 LFT	Left; used w/ 129764 on Plunger- Style Swing In/Out Hangers
1-10,11A,12B	111514	AAA FTPLT 90D 12/13 " R	Right; used w/ Old- Style Latch Block Swing In/Out & S/A Hngrs
1-10,11A,12B	111515	AAA FTPLT 90D 12/13" L	Left; used w/ Old- Style Latch Block Swing IO & S/A Hngrs
1-10,11B,12C	111516	AAA FTPLT 90D 14/15" R	Right; used w/ Old- Style Latch Block Swing In/Out & S/A Hngrs
1-10,11B,12C	111517	AAA FTPLT 90D 14/15" L	Left; used w/ Old- Style Latch Block Swing IO & S/A Hngrs
1-10,11C,12D	111518	AAA FTPLT 90D 16/17" R	Right; used w/ Old- Style Latch Block Swing In/Out & S/A Hngrs
1-10,11C,12D	111519	AAA FTPLT 90D 16/17" L	Left; used w/ Old- Style Latch Block Swing IO & S/A Hngrs
1-10,11D,12E	111520	AAA FTPLT 90D 18/20" R	Right; used w/ Old- Style Latch Block Swing In/Out & S/A Hngrs
1-10,11D,12E	111521	AAA FTPLT 90D 18/20" L	Left; used w/ Old- Style Latch Block Swing IO & S/A Hngrs
		Ship assembled part #	Use with multiple assemblies
	ASSY-HNG-FP	HANGER/FOOTPLATE ASSY REQUIRED	add with Hanger & Footplate kit

90 DEG FOOTBOARD

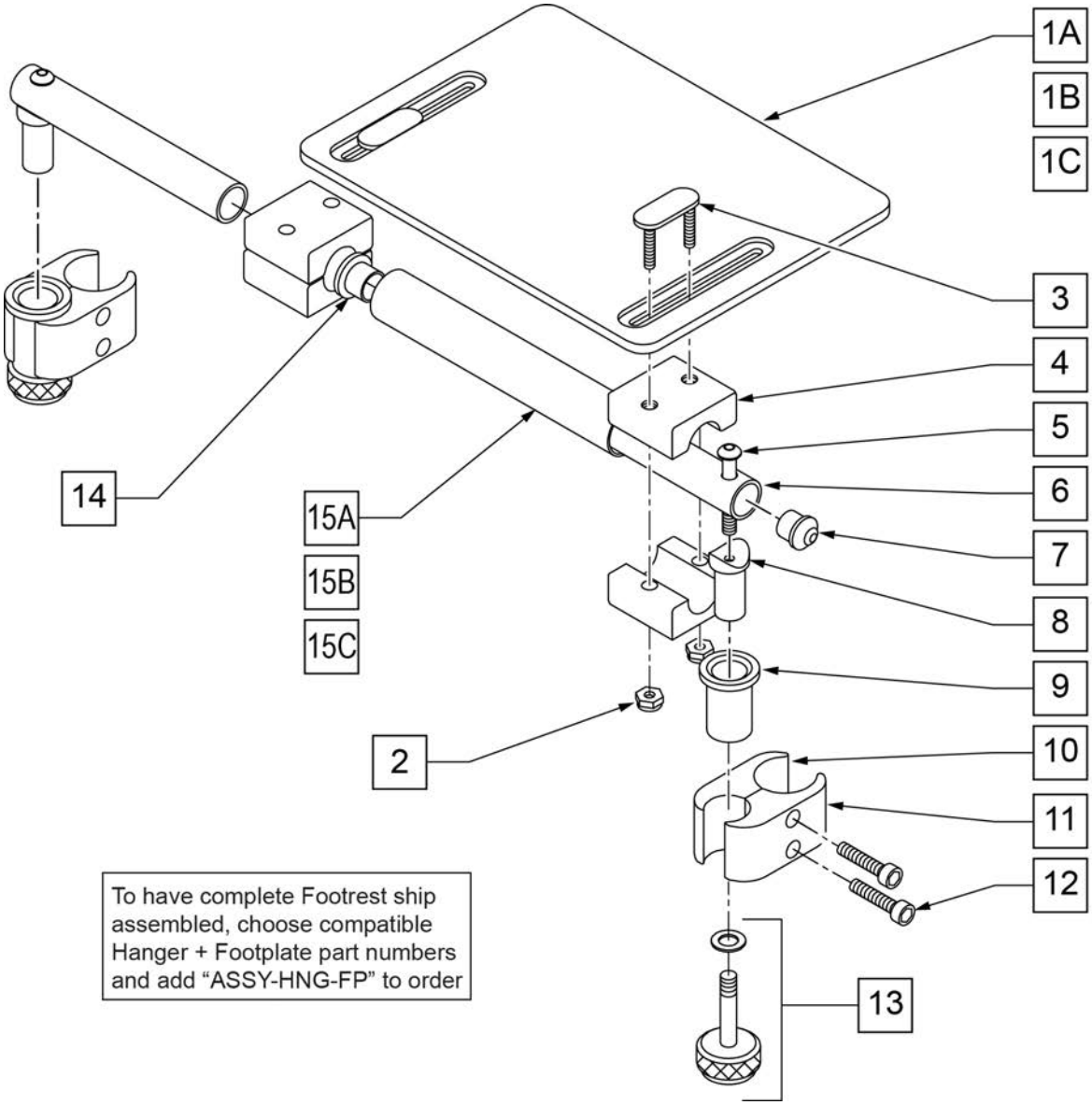

Pos.	Item Number	Description	Remarks
1A	562610	SLD FOOTPLATE ONLY 8" x 8" (10"-12" W)	10 -12" WIDE
1B	562612	SLD FOOTPLATE ONLY 10" x 8" (13"-14" W)	13 -14" WIDE
1C	500709	SLD FT PLT ALUM ONLY 12" x 8" (15"-16" W)	15 -16" WIDE
2	106933	NUT NYLOCK THIN 1/4-20 ROHS	
3	330120	SLD FT/ANGLE ADJ DOUBLE T BOLT	
4	550444	SOLID FOOT/ANG ADJ CLAMP BLK	
5	107028	BHCS 1/4-28 X 1-1/2 ROHS	
7	561034	SHORT DOME PLUG	
8	483236	SOLID FOOT INSERT SADDLE BLK	
10	550658	CLAMP 1 1/4" THREADED BLK	
11	550657	CLAMP 1 1/4" RECESS FULL BLK	
12	107032	SHCS 1/4-28 X 1 ROHS	
9,13	880559	SOLID FOOT LOCK KNOB ASSEMBLY	
14	560402	3/4" ID NY-LINER	
15A	521621	SLD FOOT SUPPORT TUBE BLK 10"-12"	10 -12" WIDE

Pos.	Item Number	Description	Remarks
15B	521622	SLD FOOT SUPPORT TUBE BLK 13"-14"	13 -14" WIDE
15C	521624	SLD FOOT SUPPORT TUBE BLK 15"-16"	15 -16" WIDE
5-8	880183	SLD FT PLT PIVOT TUBE SUB-ASSM	
1A,2-14, 15A	921801	SLD FT PLT ASSEMBLY 8" x 8" (10"-12" W)	10 -12" WIDE
1B,2-14, 15B	921803	SOLID FOOTPLATE ASSEMBLY 10" x 8" (13"-14" W)	13 -14" WIDE
1C,2-14, 15C	921805	SOLID FOOTPLATE ASSEMBLY12" x 8" (15"-16" W)	15 -16" WIDE
		Ship assembled part #	Use with multiple assemblies
	ASSY-HNG-FP	HANGER/FOOTPLATE ASSY REQUIRED	add with Hanger & Footplate kit

70 DEG LIFT-OFF HANGER

NOTE: * ORDER ITEM 16 WHEN NOT USING FOOTREST EXTENSION.

NOTE: IF RETROFITTING LIFT OFF HANGERS TO A CURRENT STYLE Q2, S/A Q2 LITE, LX/LXI, OR ZIPPIE TS, THE OLD-STYLE FRAME COMPONENTS WILL BE REQUIRED. REFER TO PARTS PAGES FOR FRONT SIDE FRAMES FOR Q2 (PRIOR TO Q2V-091821 & Q2H-009882), Q2 LITE (PRIOR TO Q2L-152965), LX/LXI (PRIOR TO LX-061888), AND ZIPPIE TS (PRIOR TO Z1A-038633 & Z1SE-013380).

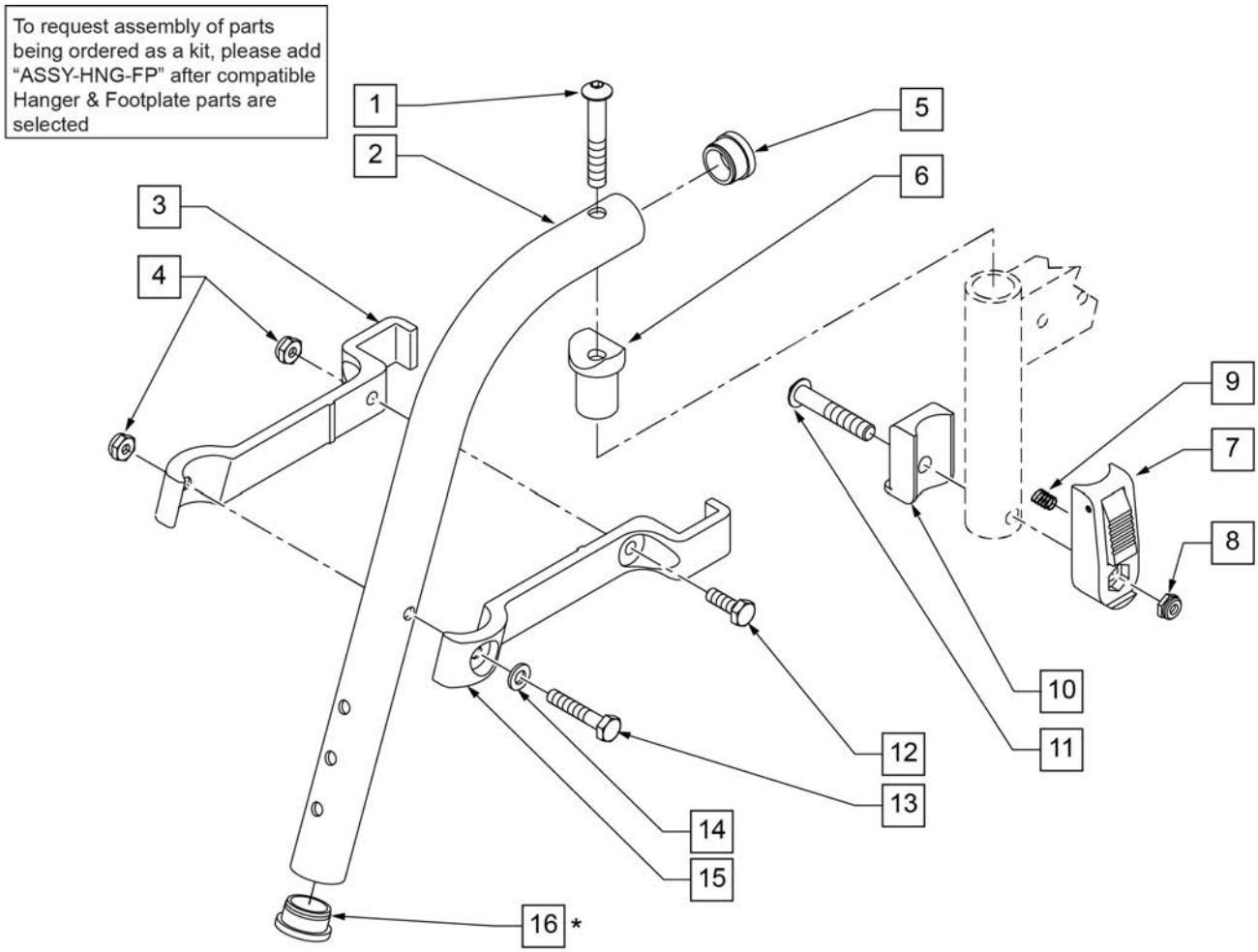

Pos.	Item Number	Description	Remarks
1	106983	BHCS 5/16 -18 x 2 SHLDR ROHS	
3	550152	T45 HANGER BRACKET 70ø R	length of bracket: 6 3/4"
4	106935	NUT NYLOCK THIN 1/4 -28 ROHS	
5	561002	1" INSERT PLUG .083	
6	561197	PLASTIC PIVOT SADDLE	
7	880053	FOOTREST BLOCK T45	
8	202117	5/16-18 NYLOCK NUT THICK BLK	
9	321141	.650 x 6 COIL SPRING	
10	560684	T45 FOOTREST BLOCK RECESSED	
11	107029	BHCS 5/16 -18 x 1 5/8 SHLD ROHS	
12	107014	HHCS 1/4 -28 x 3/4 ROHS	

Pos.	Item Number	Description	Remarks
13	106971	HHCS 1/4 -28 x 1 3/8 ROHS	
14	106943	WASHER FLAT AN 1/4 ROHS	
15	550153	T45 HANGER BRACKET 70ø L	length of bracket: 6 3/4"
16	561002	1" INSERT PLUG .083	ORDER WHEN NOT USING FOOTREST EXTENSION
7-11	920720	FOOTREST BLOCK ASSEMBLY W/BOLT HD	required when retrofitting HD Lift Off Hangers to chair
1-6,12-15	641210S	HANGER 70D PNTD R HD	
1-6,12-15	641211S	HANGER 70D PNTD L HD	
		Ship assembled part #	Use with multiple assemblies
	ASSY-HNG-FP	HANGER/FOOTPLATE ASSY REQUIRED	add with Hanger & Footplate kit

80 DEG LIFT-OFF HANGER

NOTE: * ORDER ITEM 16 WHEN NOT USING FOOTREST EXTENSION.

NOTE: IF RETROFITTING LIFT OFF HANGERS TO A CURRENT STYLE Q2, S/A Q2 LITE, LX/LXI, OR ZIPPIE TS, THE OLD-STYLE FRAME COMPONENTS WILL BE REQUIRED. REFER TO PARTS PAGES FOR FRONT SIDE FRAMES FOR Q2 (PRIOR TO Q2V-091821 & Q2H-009882), Q2 LITE (PRIOR TO Q2L-152965), LX/LXI (PRIOR TO LX-061888), AND ZIPPIE TS (PRIOR TO Z1A-038633 & Z1SE-013380).

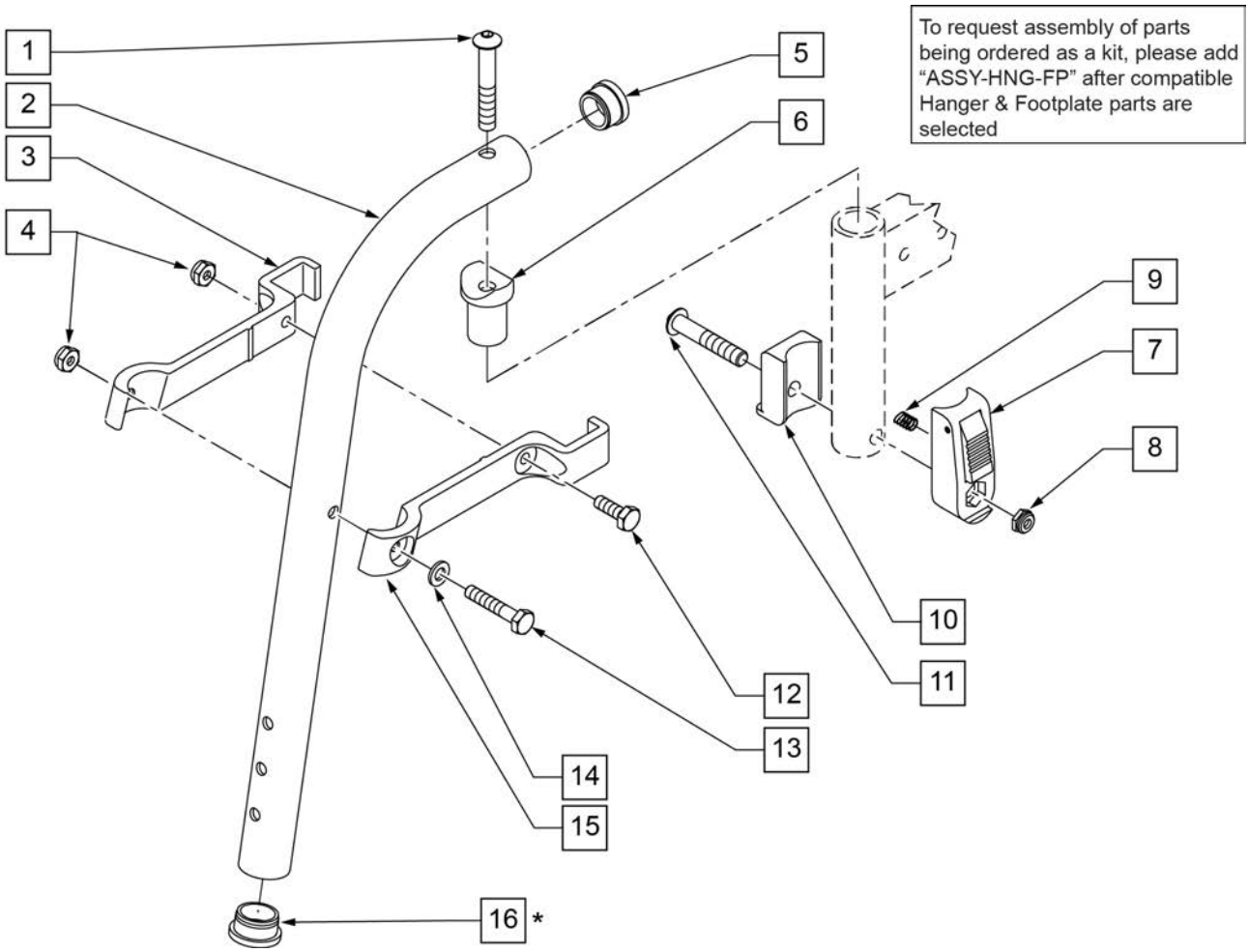

Pos.	Item Number	Description	Remarks
1	106983	BHCS 5/16 -18 x 2 SHLDR ROHS	
3	550154	T45 HANGER BRACKET 80ø R	length of bracket: 6"
4	106935	NUT NYLOCK THIN 1/4 -28 ROHS	
5	561002	1" INSERT PLUG .083	
6	561197	PLASTIC PIVOT SADDLE	
7	880053	FOOTREST BLOCK T45	
8	202117	5/16-18 NYLOCK NUT THICK BLK	
9	321141	.650L x 6 COIL SPRING	
10	560684	T45 FOOTREST BLOCK RECESSED	
11	107029	BHCS 5/16 -18 x 1 5/8 SHLD ROHS	
12	107014	HHCS 1/4 -28 x 3/4 ROHS	

Pos.	Item Number	Description	Remarks
13	106971	HHCS 1/4 -28 x 1 3/8 ROHS	
14	106943	WASHER FLAT AN 1/4 ROHS	
15	550155	T45 HANGER BRACKET 80ø L	length of bracket: 6"
16	561002	1" INSERT PLUG .083	ORDER WHEN NOT USING FOOTREST EXTENSION
7-11	920720	FOOTREST BLOCK ASSEMBLY W/BOLT HD	required when retrofitting HD Lift Off Hangers to chair
1-6,12-15	641200S	HANGER 80D PNTD R HD	
1-6,12-15	641201S	HANGER 80D PNTD L HD	
		Ship assembled part #	Use with multiple assemblies
	ASSY-HNG-FP	HANGER/FOOTPLATE ASSY REQUIRED	add with Hanger & Footplate kit

90 DEG LIFT-OFF HANGER

NOTE: THIS HANGER HAS BEEN TESTED AND APPROVED FOR OCCUPANTS THAT WEIGH LESS THAN 150 POUNDS.

NOTE: IF RETROFITTING LIFT OFF HANGERS TO A CURRENT STYLE Q2, S/A Q2 LITE, LX/LXI, OR ZIPPIE TS, THE OLD-STYLE FRAME COMPONENTS WILL BE REQUIRED. REFER TO PARTS PAGES FOR FRONT SIDE FRAMES FOR Q2 (PRIOR TO Q2V-091821 & Q2H-009882), Q2 LITE (PRIOR TO Q2L-152965), LX/LXI (PRIOR TO LX-061888), AND ZIPPIE TS (PRIOR TO Z1A-038633 & Z1SE-013380).

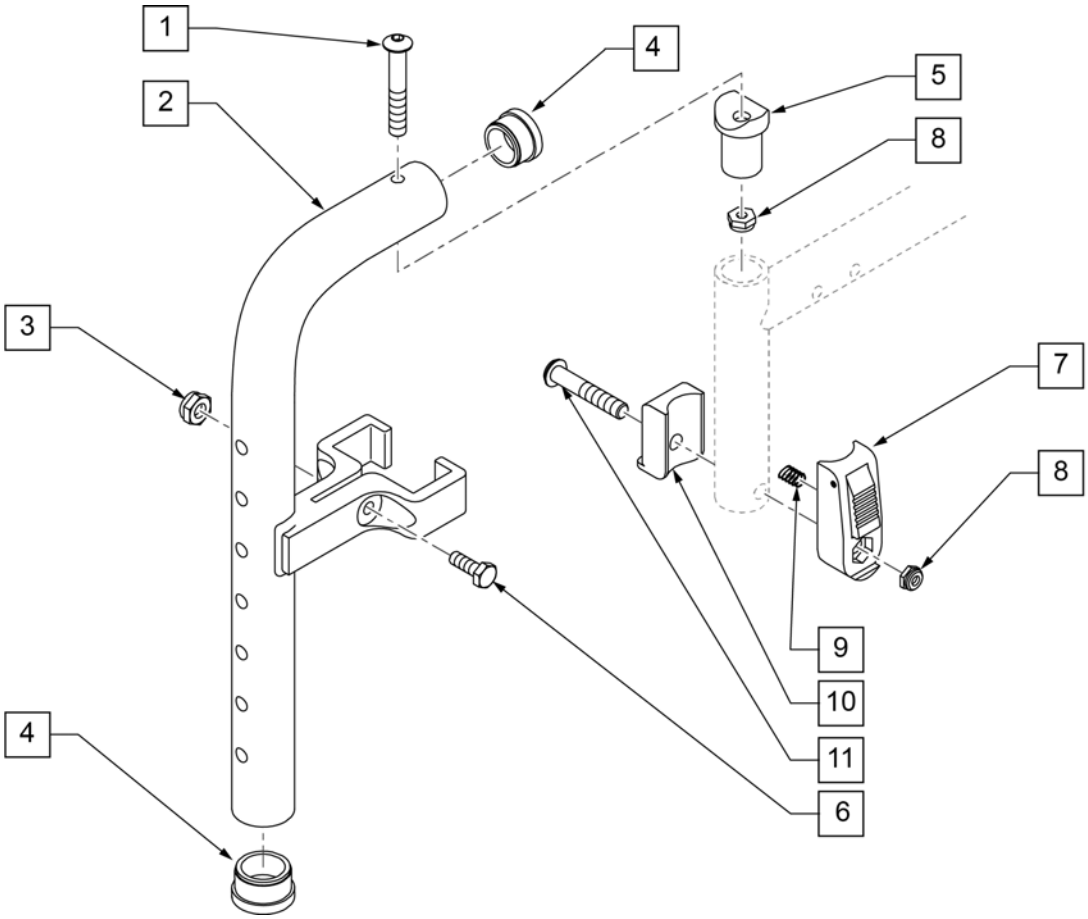

Pos.	Item Number	Description	Remarks
1	106983	BHCS 5/16 -18 x 2 SHLDR ROHS	
3	106935	NUT NYLOCK THIN 1/4 -28 ROHS	
4	561002	1" INSERT PLUG .083	
5	561197	PLASTIC PIVOT SADDLE	Includes nylock nut
6	107013	HHCS 1/4 -28 x 5/8 ROHS	
7	880053	FOOTREST BLOCK T45	
8	202117	5/16-18 NYLOCK NUT THICK BLK	
9	321141	.650L x 6 COIL SPRING	
10	560684	T45 FOOTREST BLOCK RECESSED	
11	107029	BHCS 5/16 -18 x 1 5/8 SHLD ROHS	
7-11	920720	FOOTREST BLOCK ASSM W/BOLT HD	
1-7	885005S	90 DEG F/D H/D L/O HNGR ASSM PNTD	
		Ship assembled part #	Use with multiple assemblies
	ASSY-HNG-FP	HANGER/FOOTPLATE ASSY REQUIRED	add with Hanger & Footplate kit

FRONT MOUNT HANGER EXT

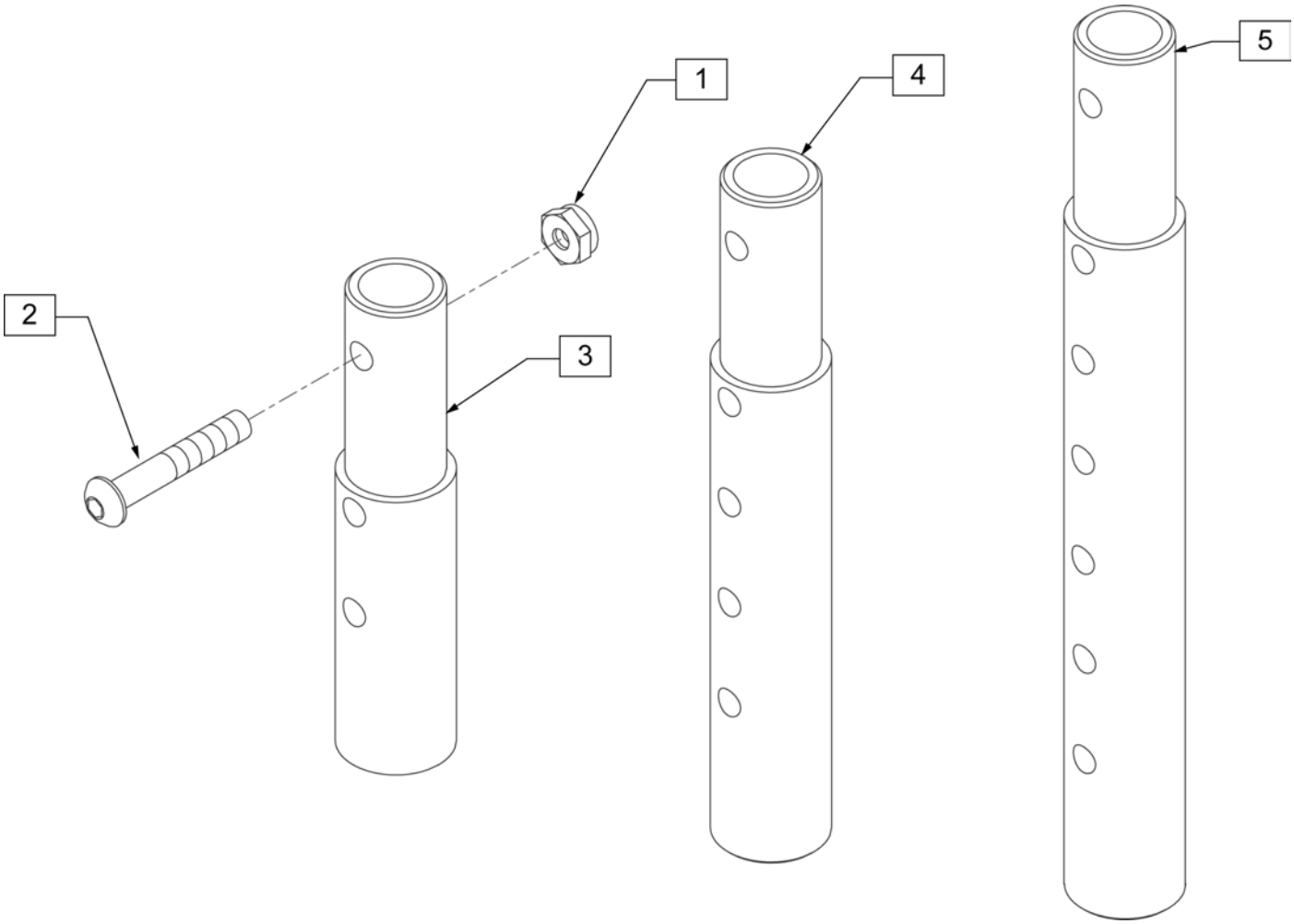

Pos.	Item Number	Description	Remarks
1	106935	NUT NYLOCK THIN 1/4 -28 ROHS	
2	106961	BHCS 1/4 -28 x 1 1/4 ROHS	
1-3	111505	2" FOOTREST EXTENSION TUBE W/ HDWR ASSM	2" EXT (PAIR)
1, 2, 4	111506	4" FOOTREST EXTENSION TUBE W/ HDWR ASSM	4" EXT (PAIR)
1, 2, 5	111507	6" FOOTREST EXTENSION TUBE W/ HDWR ASSM	6" EXT (PAIR)

KIDS ANGLE ADJ FOOTPLATE FRONT MOUNT

[02/20/2019]

To have complete Footrest ship assembled, choose compatible Hanger + Footplate part numbers and add “ASSY-HNG-FP” to order

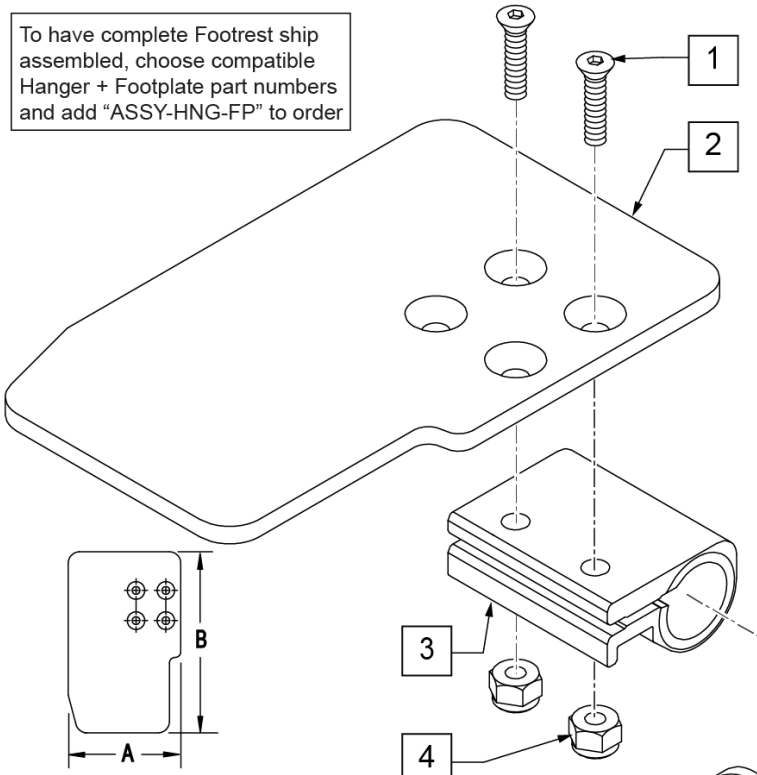

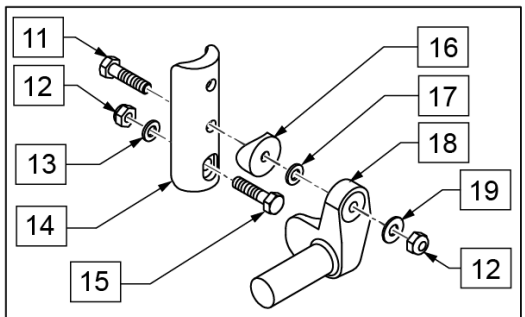

Note: used on Plunger-Style Swing In-Out Hangers; Kit 129764 (items 11-19) is PAIR

MEASURING GUIDE

CHAIR WIDTH	“A”	“B”
10” W	3.55”	6.00”
11” W	4.05”	6.00”
12” W	4.55”	6.00”
13” W	5.05”	6.00”
14” W	5.55”	6.00”
15” W	6.05”	6.00”
16” W	6.55”	6.00”

INSET FORMULA

0” Inset (Seat Width) = Footrest Width
1” Inset (Seat Width) -2” = Footrest Width
“V” Hanger (Seat Width) -4” = Footrest Width
Offset Hanger Receiver (Seat Width) +2” = Footrest Width

Pos.	Item Number	Description	Remarks
1	106978	FHCS 1/4-28 X 7/8 ROHS	
2	500635	KIDS ANGL ADJ F/PLT 10	RIGHT
2	500636	KIDS ANGL ADJ F/PLT 10	LEFT
2	500637	KIDS ANGL ADJ F/PLT 11	RIGHT
2	500638	KIDS ANGL ADJ F/PLT 11	LEFT
2	500639	KIDS ANGL ADJ F/PLT 12	RIGHT
2	500640	KIDS ANGL ADJ F/PLT 12	LEFT
2	500641	KIDS ANGL ADJ F/PLT 13	RIGHT
2	500642	KIDS ANGL ADJ F/PLT 13	LEFT
2	500643	KIDS ANGL ADJ F/PLT 14	RIGHT
2	500644	KIDS ANGL ADJ F/PLT 14	LEFT
2	500645	KIDS ANGL ADJ F/PLT 15	RIGHT
2	500646	KIDS ANGL ADJ F/PLT 15	LEFT
2	500647	KIDS ANGL ADJ F/PLT 16	RIGHT
2	500648	KIDS ANGL ADJ F/PLT 16	LEFT
3	550350	3/4 CLAMP ADJ FOOTPLATE	
4	106935	NUT NYLOCK THIN 1/4-28 ROHS	
5	226147	1/4-28 X 1.85 BH C/S BLK ZN	

Pos.	Item Number	Description	Remarks
6	106945	WASHER FLAT SAE 1/4 ROHS	
7	541000	FTRST MOUNTING BRKT 1/2" RAD R	RIGHT
7	541001	FTRST MOUNTING BRKT 1/2" RAD L	LEFT
8	561004	1 SADDLE 1/4 HOLE	
9	106943	WASHER FLAT THIN AN 1/4	
10	106941	NUT AUTOMATION 1/4-28 ROHS	
11	102268-001	HHCS M6 X 1 X 25	
12	132626	NUT AUTOMATION M6 X 1.0 ROHS	
13	107383	WASHER FLAT M6 ROHS	
15	118198	HHCS M6 X 1 X 40 PART NP	
16	561004	1" SADDLE 1/4" HOLE	
17	106943	WASHER FLAT AN 1/4 ROHS	
19	106945	WASHER FLAT SAE 1/4 ROHS	
1-4	158632	KAA F/PLT KIT 10 RT	RIGHT; used with Front Mount Adapter Kit on Plunger-Style Swing In/Out Hangers
1-4	158633	KAA F/PLT KIT 10 LT	LEFT; used with Front Mount Adapter Kit on Plunger-Style Swing In/Out Hangers
1-4	158634	KAA F/PLT KIT 11 RT	RIGHT; used with Front Mount Adapter Kit on Plunger-Style Swing In/Out Hangers
1-4	158635	KAA F/PLT KIT 11 LT	LEFT; used with Front Mount Adapter Kit on Plunger-Style Swing In/Out Hangers
1-4	158636	KAA F/PLT KIT 12 RT	RIGHT; used with Front Mount Adapter Kit on Plunger-Style Swing In/Out Hangers
1-4	158637	KAA F/PLT KIT 12 LT	LEFT; used with Front Mount Adapter Kit on Plunger-Style Swing In/Out Hangers
1-4	158638	KAA F/PLT KIT 13 RT	RIGHT; used with Front Mount Adapter Kit on Plunger-Style Swing In/Out Hangers
1-4	158639	KAA F/PLT KIT 13 LT	LEFT; used with Front Mount Adapter Kit on Plunger-Style Swing In/Out Hangers
1-4	158640	KAA F/PLT KIT 14 RT	RIGHT; used with Front Mount Adapter Kit on Plunger-Style Swing In/Out Hangers
1-4	158641	KAA F/PLT KIT 14 LT	LEFT; used with Front Mount Adapter Kit on Plunger-Style Swing In/Out Hangers
1-4	158642	KAA F/PLT KIT 15 RT	RIGHT; used with Front Mount Adapter Kit on Plunger-Style Swing In/Out Hangers
1-4	158643	KAA F/PLT KIT 15 LT	LEFT; used with Front Mount Adapter Kit on Plunger-Style Swing In/Out Hangers
1-4	158644	KAA F/PLT KIT 16 RT	RIGHT; used with Front Mount Adapter Kit on Plunger-Style Swing In/Out Hangers
1-4	158645	KAA F/PLT KIT 16 LT	LEFT; used with Front Mount Adapter Kit on Plunger-Style Swing In/Out Hangers
1-10	828821	KIDS ANG ADJ F/PLT ASSM 10	RIGHT; used with Old-Style Latch Block Swing In/Out & S/A Hangers
1-10	828822	KIDS ANG ADJ F/PLT ASSM 10	LEFT; used with Old-Style Latch Block Swing In/Out & S/A Hangers
1-10	828823	KIDS ANG ADJ F/PLT ASSM 11	RIGHT; used with Old-Style Latch Block Swing In/Out & S/A Hangers
1-10	828824	KIDS ANG ADJ F/PLT ASSM 11	LEFT; used with Old-Style Latch Block Swing In/Out & S/A Hangers
1-10	828825	KIDS ANG ADJ F/PLT ASSM 12	RIGHT; used with Old-Style Latch Block Swing In/Out & S/A Hangers
1-10	828826	KIDS ANG ADJ F/PLT ASSM 12	LEFT; used with Old-Style Latch Block Swing In/Out & S/A Hangers
1-10	828827	KIDS ANG ADJ F/PLT ASSM 13	RIGHT; used with Old-Style Latch Block Swing In/Out & S/A Hangers
1-10	828828	KIDS ANG ADJ F/PLT ASSM 13	LEFT; used with Old-Style Latch Block Swing In/Out & S/A Hangers
1-10	828829	KIDS ANG ADJ F/PLT ASSM 14	RIGHT; used with Old-Style Latch Block Swing In/Out & S/A Hangers
1-10	828830	KIDS ANG ADJ F/PLT ASSM 14	LEFT; used with Old-Style Latch Block Swing In/Out & S/A Hangers
1-10	828831	KIDS ANG ADJ F/PLT ASSM 15	RIGHT; used with Old-Style Latch Block Swing In/Out & S/A Hangers
1-10	828832	KIDS ANG ADJ F/PLT ASSM 15	LEFT; used with Old-Style Latch Block Swing In/Out & S/A Hangers

Pos.	Item Number	Description	Remarks
1-10	828833	KIDS ANG ADJ F/PLT ASSM 16	RIGHT; used with Old-Style Latch Block Swing In/Out & S/A Hangers
1-10	828834	KIDS ANG ADJ F/PLT ASSM 16	LEFT; used with Old-Style Latch Block Swing In/Out & S/A Hangers
1-10	921226	KIDS ANG ADJ F/PLT ASSM 10	PAIR; used with Old-Style Latch Block Swing In/Out & S/A Hangers
1-10	921227	KIDS ANG ADJ F/PLT ASSM 11	PAIR; used with Old-Style Latch Block Swing In/Out & S/A Hangers
1-10	921228	KIDS ANG ADJ F/PLT ASSM 12	PAIR; used with Old-Style Latch Block Swing In/Out & S/A Hangers
1-10	921229	KIDS ANG ADJ F/PLT ASSM 13	PAIR; used with Old-Style Latch Block Swing In/Out & S/A Hangers
1-10	921230	KIDS ANG ADJ F/PLT ASSM 14	PAIR; used with Old-Style Latch Block Swing In/Out & S/A Hangers
1-10	921231	KIDS ANG ADJ F/PLT ASSM 15	PAIR; used with Old-Style Latch Block Swing In/Out & S/A Hangers
1-10	921232	KIDS ANG ADJ F/PLT ASSM 16	PAIR; used with Old-Style Latch Block Swing In/Out & S/A Hangers
11-19	129764	AAA FRNT MNT ADAPTER KIT PR	AAA FRNT MNT fits both Kids and Adult Angle Adjustable Footplates
		Ship assembled part #	Use with multiple assemblies
	ASSY-HNG-FP	HANGER/FOOTPLATE ASSY REQUIRED	add with Hanger & Footplate kit

ADULT ANGLE-ADJ FOOTPLATE FRONT MOUNT

Note: for QX Series or SR45 footplate replacement parts see the ordering guide marked specifically for these two models in the informations panel.

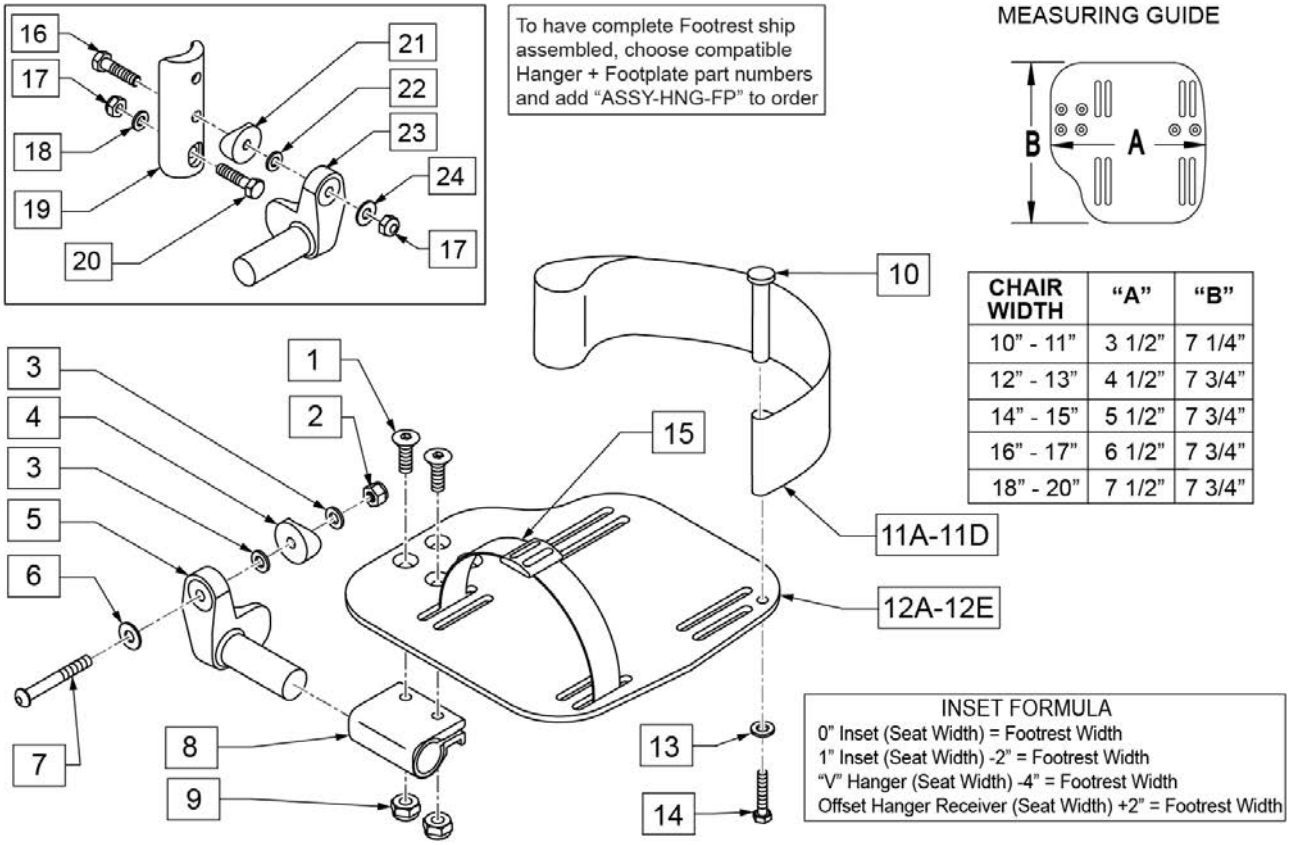

CHAIR WIDTH	"A"	"B"
10" - 11"	3 1/2"	7 1/4"
12" - 13"	4 1/2"	7 3/4"
14" - 15"	5 1/2"	7 3/4"
16" - 17"	6 1/2"	7 3/4"
18" - 20"	7 1/2"	7 3/4"

Pos.	Item Number	Description	Remarks
1	106978	FHCS 1/4-28 X 7/8	
2	106934	NUT NYLOCK 1/4-28	
3	106944	WASHER FLAT THIN AN 1/4	
4	561004	Q2 SADDLE	
5	541000	FTRST MOUNTING BRKT 1/2" RAD R	Right
5	541001	FTRST MOUNTING BRKT 1/2" RAD L	Left
6	106945	WASHER FLAT SAE 1/4 ROHS	
7	106964	BHCS 1/4-28 X 2	
8	550350	3/4 CLMP ADJ FT PLT	
9	106935	NUT NYLOCK THIN 1/4-28 ROHS	
10	561040	HEEL LOOP PEG	
11A	104380-001	ADJ FOOTREST STRAP 14W	Used on 10"-13" wide
11B	104380-002	ADJ FOOTREST STRAP 15-16W	Used on 14"-15" wide
11C	104380-003	ADJ FOOTREST STRAP 17-18W	Used on 16"-17" wide
11D	104380-004	ADJ FOOTREST STRAP 19-20W	Used on 18"-20" wide
12A	500656	ADULT ANGL ADJ F/PLT 10/11	Right; 10"-11" wide
12A	500657	ADULT ANGL ADJ F/PLT 10/11	Left; 10"-11" wide

Pos.	Item Number	Description	Remarks
12B	500658	ADULT ANGL ADJ F/PLT 12/13	Right; 12"-13" wide
12B	500659	ADULT ANGL ADJ F/PLT 12/13	Left; 12"-13" wide
12C	500660	ADULT ANGL ADJ F/PLT 14/15	Right; 14"-15" wide
12C	500661	ADULT ANGL ADJ F/PLT 14/15	Left; 14"-15" wide
12D	500662	ADULT ANGL ADJ F/PLT 16/17	Right; 16"-17" wide
12D	500663	ADULT ANGL ADJ F/PLT 16/17	Left; 16"-17" wide
12E	500664	ADULT ANGL ADJ F/PLT 18-20	Right; 18"-22" wide
12E	500665	ADULT ANGL ADJ F/PLT 18-20	Left; 18"-22" wide
13	107383	WASHER FLAT M6 ROHS	
14	102268-001	HHCS M6 X 1 X 25	
15	740260	TOE-ANKLE STRAP ADJ ADULT FOOTPLATE	
16	102268-001	HHCS M6 X 1 X 25	
17	132626	NUT AUTOMATION M6 X 1	
18	107383	WASHER FLAT M6 ROHS	
20	118198	HHCS M6X1X40 PART NP	
21	561004	Q2 SADDLE	
22	106943	WASHER FLAT AN 1/4 ROHS	
24	106945	WASHER FLAT SAE 1/4 ROHS	
16-24	129764	AAA FRNT MNT ADAPTER KIT PR	Pair; fits both Kids & Adult Angle Adj Footplates
1,8-10,11A,12A,13,14	129765	AAA F/PLT KIT 10-11 RT	Right; used w/ 129764 on Plunger- Style Swing In/Out Hangers
1,8-10,11A,12A,13,14	129766	AAA F/PLT KIT 10-11 LFT	Left; used w/ 129764 on Plunger- Style Swing In/Out Hangers
1,8-10,11A,12B,13,14	129767	AAA F/PLT KIT 12-13 RT	Right; used w/ 129764 on Plunger- Style Swing In/Out Hangers
1,8-10,11A,12B,13,14	129768	AAA F/PLT KIT 12-13 LFT	Left; used w/ 129764 on Plunger- Style Swing In/Out Hangers
1,8-10,11B,12C,13,14	129769	AAA F/PLT KIT 14-15 RT	Right; used w/ 129764 on Plunger- Style Swing In/Out Hangers
1,8-10,11B,12C,13,14	129770	AAA F/PLT KIT 14-15 LFT	Left; used w/ 129764 on Plunger- Style Swing In/Out Hangers
1,8-10,11C,12D,13,14	129771	AAA F/PLT KIT 16-17 RT	Right; used w/ 129764 on Plunger- Style Swing In/Out Hangers
1,8-10,11C,12D,13,14	129772	AAA F/PLT KIT 16-17 LFT	Left; used w/ 129764 on Plunger- Style Swing In/Out Hangers
1,8-10,11D,12E,13,14	129773	AAA F/PLT KIT 18-20 RT	Right; used w/ 129764 on Plunger- Style Swing In/Out Hangers
1,8-10,11D,12E,13,14	129774	AAA F/PLT KIT 18-20 LFT	Left; used w/ 129764 on Plunger- Style Swing In/Out Hangers
1-10,11A,12B	111514	AAA FTPLT 90D 12/13 " R	Right; used w/ Old- Style Latch Block Swing In/Out & S/A Hngrs
1-10,11A,12B	111515	AAA FTPLT 90D 12/13" L	Left; used w/ Old- Style Latch Block Swing IO & S/A Hngrs
1-10,11B,12C	111516	AAA FTPLT 90D 14/15" R	Right; used w/ Old- Style Latch Block Swing In/Out & S/A Hngrs
1-10,11B,12C	111517	AAA FTPLT 90D 14/15" L	Left; used w/ Old- Style Latch Block Swing IO & S/A Hngrs
1-10,11C,12D	111518	AAA FTPLT 90D 16/17" R	Right; used w/ Old- Style Latch Block Swing In/Out & S/A Hngrs
1-10,11C,12D	111519	AAA FTPLT 90D 16/17" L	Left; used w/ Old- Style Latch Block Swing IO & S/A Hngrs
1-10,11D,12E	111520	AAA FTPLT 90D 18/20" R	Right; used w/ Old- Style Latch Block Swing In/Out & S/A Hngrs
1-10,11D,12E	111521	AAA FTPLT 90D 18/20" L	Left; used w/ Old- Style Latch Block Swing IO & S/A Hngrs
		Ship assembled part #	Use with multiple assemblies
	ASSY-HNG-FP	HANGER/FOOTPLATE ASSY REQUIRED	add with Hanger & Footplate kit

90 DEG FOOTBOARD

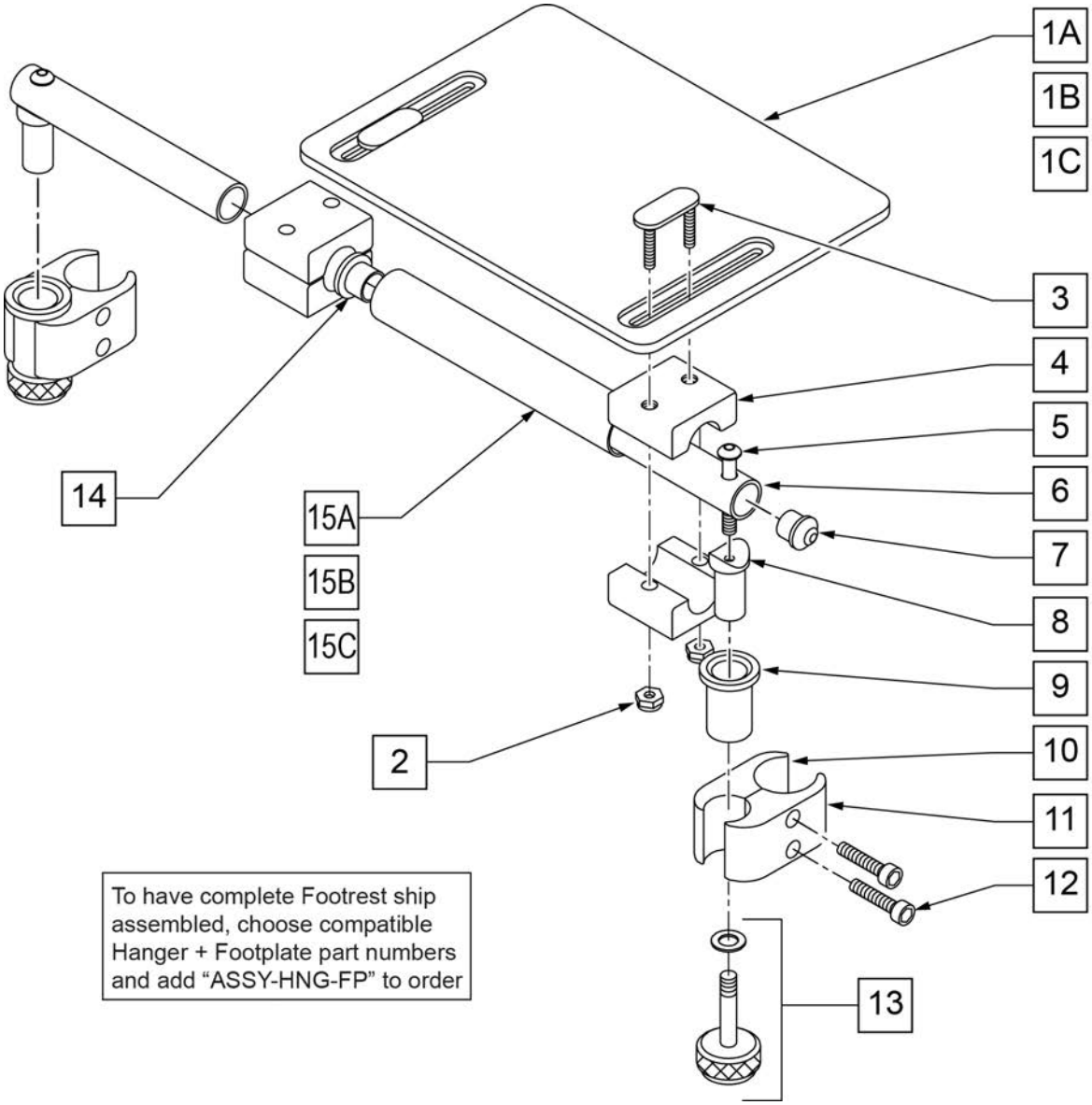

Pos.	Item Number	Description	Remarks
1A	562610	SLD FOOTPLATE ONLY 8" x 8" (10"-12" W)	10 -12" WIDE
1B	562612	SLD FOOTPLATE ONLY 10" x 8" (13"-14" W)	13 -14" WIDE
1C	500709	SLD FT PLT ALUM ONLY 12" x 8" (15"-16" W)	15 -16" WIDE
2	106933	NUT NYLOCK THIN 1/4-20 ROHS	
3	330120	SLD FT/ANGLE ADJ DOUBLE T BOLT	
4	550444	SOLID FOOT/ANG ADJ CLAMP BLK	
5	107028	BHCS 1/4-28 X 1-1/2 ROHS	
7	561034	SHORT DOME PLUG	
8	483236	SOLID FOOT INSERT SADDLE BLK	
10	550658	CLAMP 1 1/4" THREADED BLK	
11	550657	CLAMP 1 1/4" RECESS FULL BLK	
12	107032	SHCS 1/4-28 X 1 ROHS	
9,13	880559	SOLID FOOT LOCK KNOB ASSEMBLY	
14	560402	3/4" ID NY-LINER	
15A	521621	SLD FOOT SUPPORT TUBE BLK 10"-12"	10 -12" WIDE

Pos.	Item Number	Description	Remarks
15B	521622	SLD FOOT SUPPORT TUBE BLK 13"-14"	13 -14" WIDE
15C	521624	SLD FOOT SUPPORT TUBE BLK 15"-16"	15 -16" WIDE
5-8	880183	SLD FT PLT PIVOT TUBE SUB-ASSM	
1A,2-14, 15A	921801	SLD FT PLT ASSEMBLY 8" x 8" (10"-12" W)	10 -12" WIDE
1B,2-14, 15B	921803	SOLID FOOTPLATE ASSEMBLY 10" x 8" (13"-14" W)	13 -14" WIDE
1C,2-14, 15C	921805	SOLID FOOTPLATE ASSEMBLY12" x 8" (15"-16" W)	15 -16" WIDE
		Ship assembled part #	Use with multiple assemblies
	ASSY-HNG-FP	HANGER/FOOTPLATE ASSY REQUIRED	add with Hanger & Footplate kit

ELEVATING HANGER

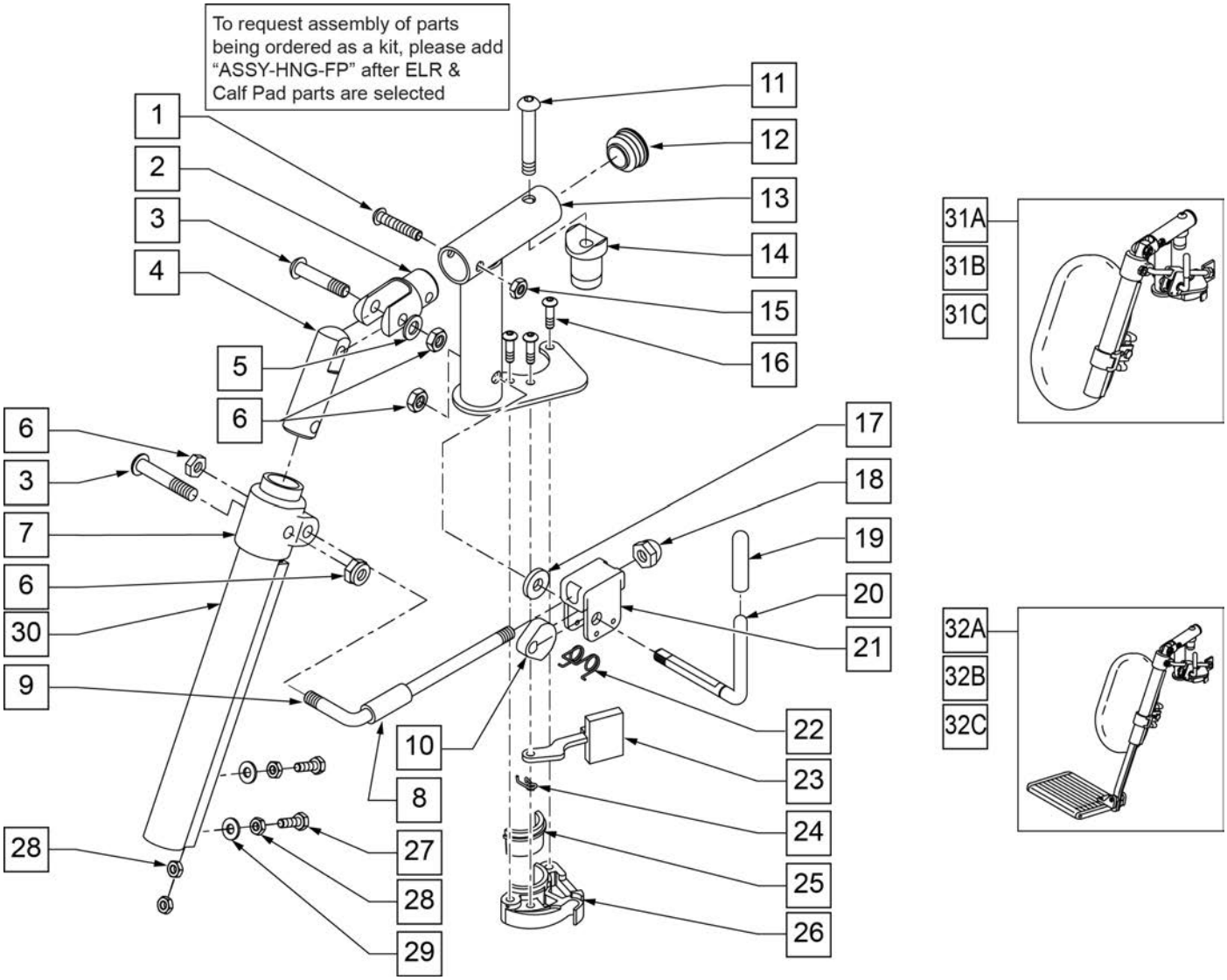

Pos.	Item Number	Description	Remarks
1	106961	1/4-28 X 1 1/4 BH C/S	
2	505281	ELR CLEVIS	
3	107037	BHCS 5/16-24 X 1-1/2 SHLD ROHS	
4	540252	ELR PIVOT PRS	
5	106946	WASHER FLAT AN 5/16 ROHS	
6	106939	NUT NYLOCK THIN 5/16-24 ROHS	
7	560420	ELR UPPER PIVOT PLST	
8	560784	ELR ADJUSTMENT STOP	
9	481117	ELR LOCK ROD	
10	481119	ELR CAM LOCKING POWDERED METAL	
11	106982	BHCS 5/16 -18 x 1 3/4 SHLD ROHS	
12	561062	1" INSERT PLUG .065 RIBS	
14	122729	ELR ALUM PIVOT SADDLE	
15	106935	NUT NYLOCK THIN 1/4-28 ROHS	
16	107035	BHCS 10-24 X .725 PL ROHS	
17	561059	3/4 OD x .318 ID WASHER	
18	202109	5/16-24 ACORN NUT HEX	

Pos.	Item Number	Description	Remarks
19	561049	ELR RELEASE ROD COVER	
19,20	882410S	ELR ACTUATION ARM ASSEMBLY	
21	880990	ELR LOCK HOUSING W/PIN	
22	321106	ELR TORSION SPRING	
23	561079	S/A LATCH LEVER	
24	321136	S/A SPRING L RED	LEFT
24	321137	S/A SPRING R CLEAR	RIGHT
27	107014	1/4-28 x 3/4 HEX C/S	
28	107249	NUT HEX THIN 1/4-28 ROHS	
29	106944	WASHER FLAT THIN AN 1/4 ROHS	
30	550722S	ELR ADJUSTMENT TUBE	
6,8-10,17-22	881077S	ELR LOCK ROD/ARM ASSEMBLY	
25,26	881500	LATCH BLOCK ASSM	RIGHT
25,26	881501	LATCH BLOCK ASSM	LEFT
1-6,11-16,20-24	882413	ELR PIVOT BLOCK ASSM	RIGHT
1-6,11-16,20-24	882414	ELR PIVOT BLOCK ASSM	LEFT
1-26	881422	ELR PIVOT ASSM RIGHT	RIGHT
1-26	881423	ELR PIVOT ASSM LEFT	LEFT
1-30	641452S	ELR HNGR W/O PAD PNTD MNL	RIGHT
1-30	641453S	ELR HNGR W/O PAD PNTD MNL	LEFT
31A	923082S	ELR HNGR ASSM 14-15 W /PAD (PR)	PAIR
31B	923041S	ELR HNGR ASSM W/PAD 16-17"	PAIR
31C	923061S	ELR HNGR ASSM W/PAD 18-20"	PAIR
32A	923088S	ELR HNGR REG EXT 14 15" F/PLT	Pair-includes short extensions, 11.5" - 15.5"
32B	923084S	ELR HNGR REG EXT 16 17" F/PLT	Pair-includes short extensions, 11.5" - 15.5"
32C	923085S	ELR HNGR REG EXT 18-20" F/PLT	Pair-includes short extensions, 11.5" - 15.5"
16,23-26	881521	S/A LATCH KIT CASTING RIGHT	RIGHT
16,23-26	881522	S/A LATCH KIT CASTING LEFT	LEFT
		Ship assembled part #	Use with multiple assemblies
	ASSY-HNG-FP	HANGER/FOOTPLATE ASSY REQUIRED	add with Hanger & Footplate kit

ELR & ALR CALF PAD 14 -15"

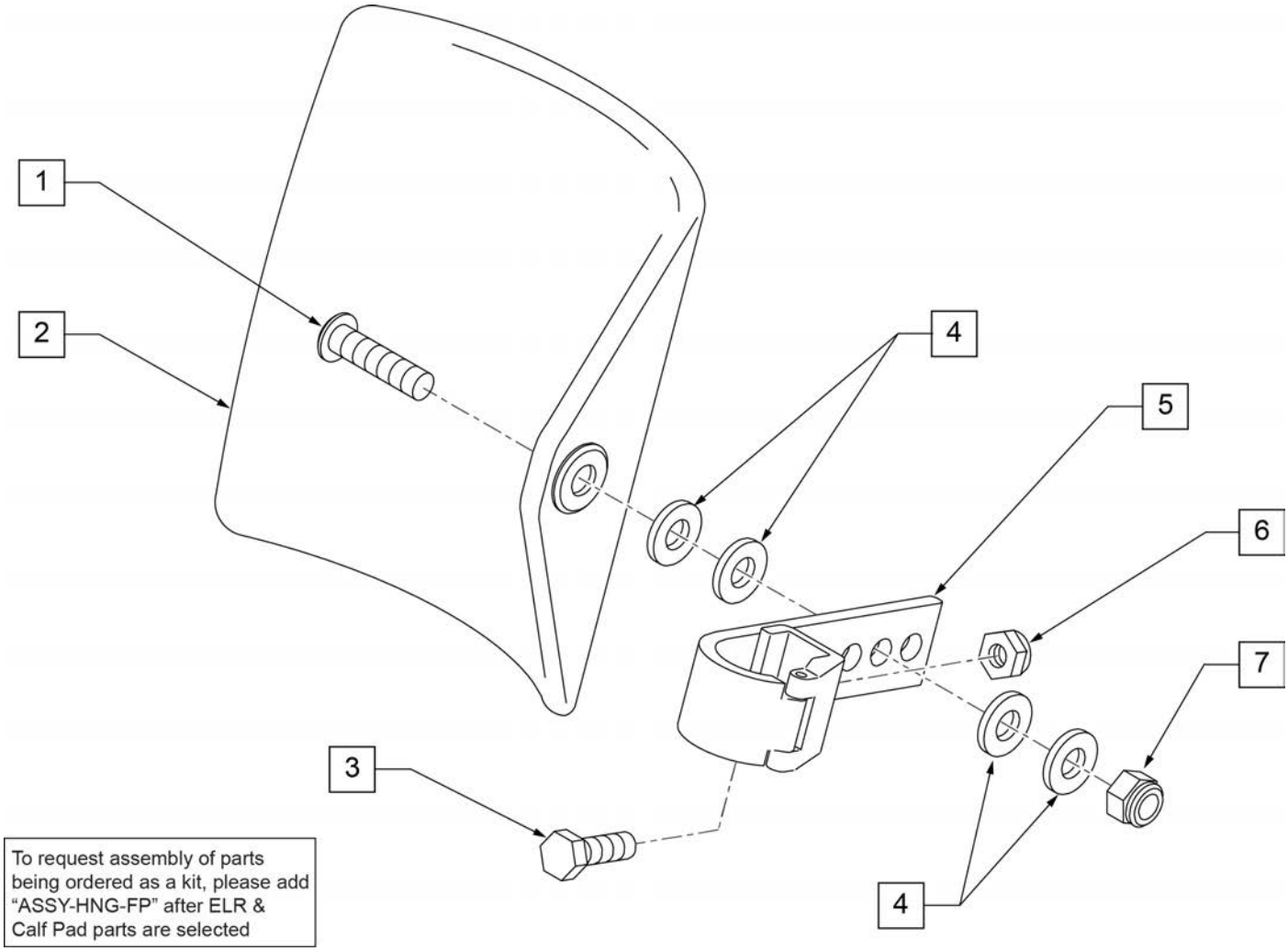

Pos.	Item Number	Description	Remarks
1	106980	BHCS 5/16-18 X 1-1/4 ROHS	
2	755014	CALF PAD TROUGH STYLE 14"/16"	
3	221097	1/4-28 X 5/8 HEX C/S BZ	
4	561016	1" WASHER 5/16" HOLE	
5	881413	CALF PAD BRACKET ASSEMBLY	
6	106934	NUT NYLOCK 1/4-28 ROHS	
7	106937	NUT NYLOCK THIN 5/16-18	
1-7	881414	CALF PAD J-HOOK 14"-15" ASSEMBLY	
		Ship assembled part #	Use with multiple assemblies
	ASSY-HNG-FP	HANGER/FOOTPLATE ASSY REQUIRED	add with Hanger & Footplate kit

ELR & ALR CALF PAD 16-20"

[02/27/2019]

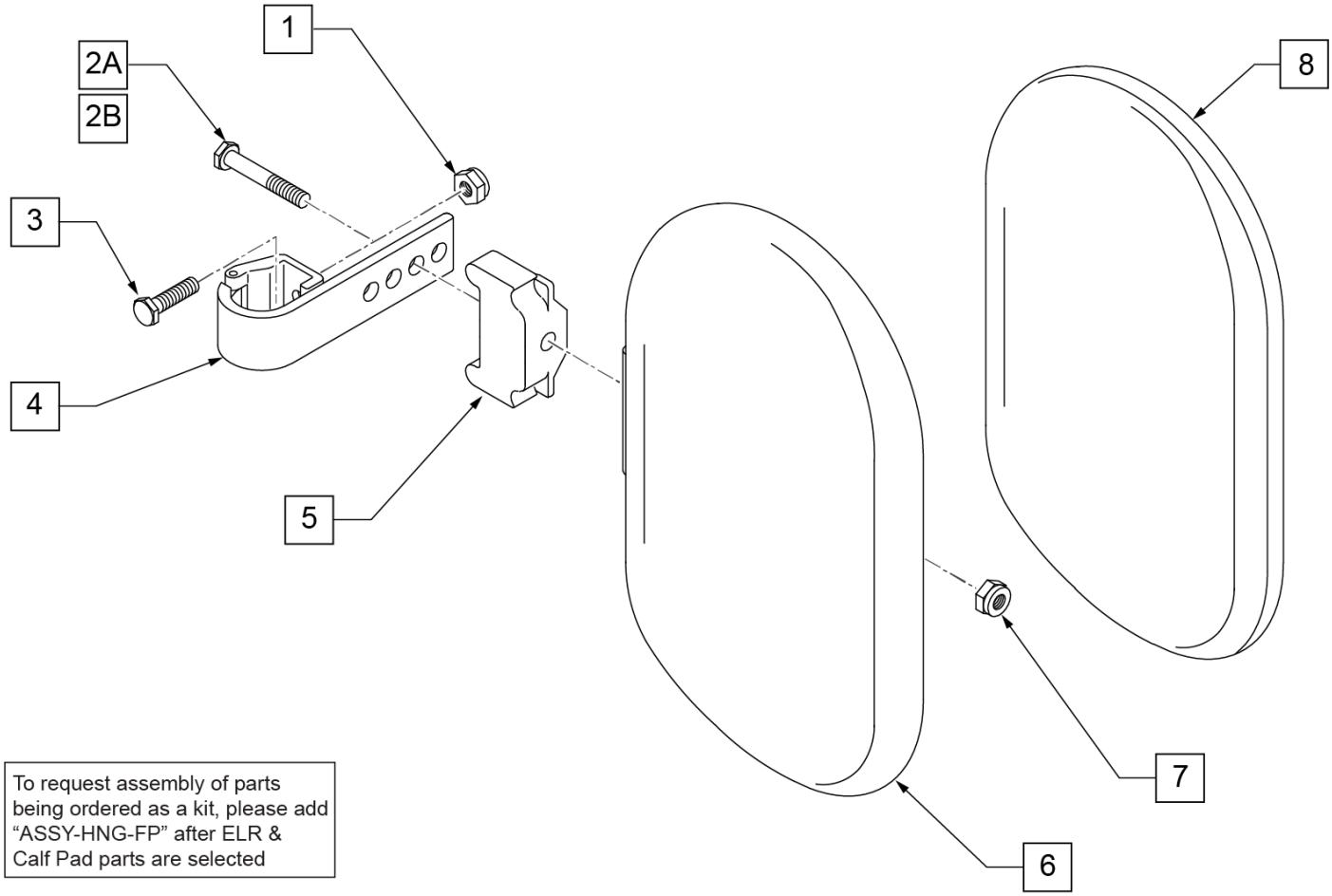

To request assembly of parts being ordered as a kit, please add "ASSY-HNG-FP" after ELR & Calf Pad parts are selected

Pos.	Item Number	Description	Remarks
1	106934	NUT NYLOCK 1/4-28 ROHS	
2A	107018	HHCS 5/16-18 X 2-1/2 ROHS	16"-17" wide only
2B	107019	HHCS 5/16-18 X 3-1/2 ROHS	18"-20" wide only
3	107013	HHCS 1/4-28 X 5/8 ROHS	
4	881413	CALF PAD BRACKET ASSEMBLY	
5	560199	ELR CALF HINGE SPACER	18"-20" wide only
6	560108	CALF PAD MOLDED 16"-20"	
7	106936	NUT NYLOCK 5/16-18 ROHS	
8	751045	CALF PAD COVER	
1,2A,3,4,6-8	881416	CALF MOLDED 16"-17" ASSEMBLY	
1,2B,3-7,8	881412	CALF PAD MOLDED 18"-20" ASSEMBLY	
		Ship assembled part #	Use with multiple assemblies
	ASSY-HNG-FP	HANGER/FOOTPLATE ASSY REQUIRED	add with Hanger & Footplate kit

DOUBLE D FOOTREST EXTENSION TUBE "OLD STYLE"

NOTE: DISCONTINUED - PARTS ONLY ON GP SWNG-AWAY BEGINNING 4/4/15 & S/N GP-95902, KIDS Q2 SE BEGINNING 4/16/15 & S/N QKE-003425, LX BEGINNING 10/24/2008 & S/N LX-034330, LXI BEGINNING 4/25/15 & S/N LXI-060868, QTS BEGINNING 5/15/15 & S/N QT-044951, QTS SE BEGINNING 5/15/15 & S/N QTE-002092

NOTE: IF REPLACING AN EXTENSION TUBE ON AN MANUAL ALR PLEASE REFER TO THE ROUND EXT TUBE PARTS MANUAL PAGE.

NOTE: WHEN ORDERING REPLACEMENT EXTENSION TUBES PLEASE VERIFY IF YOU HAVE THE OLD STYLE DOUBLE D EXTENSION TUBE OR THE NEW STYLE DOUBLE D EXTENSION TUBE. THIS CAN BE DONE BY REVIEWING THE HANGER THE EXTENSION TUBE IS USED ON. IF THE HANGER UTILIZES A SINGLE SET SCREW AT THE BOTTOM OF THE HANGER TUBE TO ATTACH THE EXTENSION TUBE TO THE HANGER, THEN THIS UTILIZES THE NEW STYLE DOUBLE D EXT TUBE. ALL OTHER HANGERS REQUIRING A DOUBLE D EXTENSION TUBE UTILIZE THE OLD STYLE.

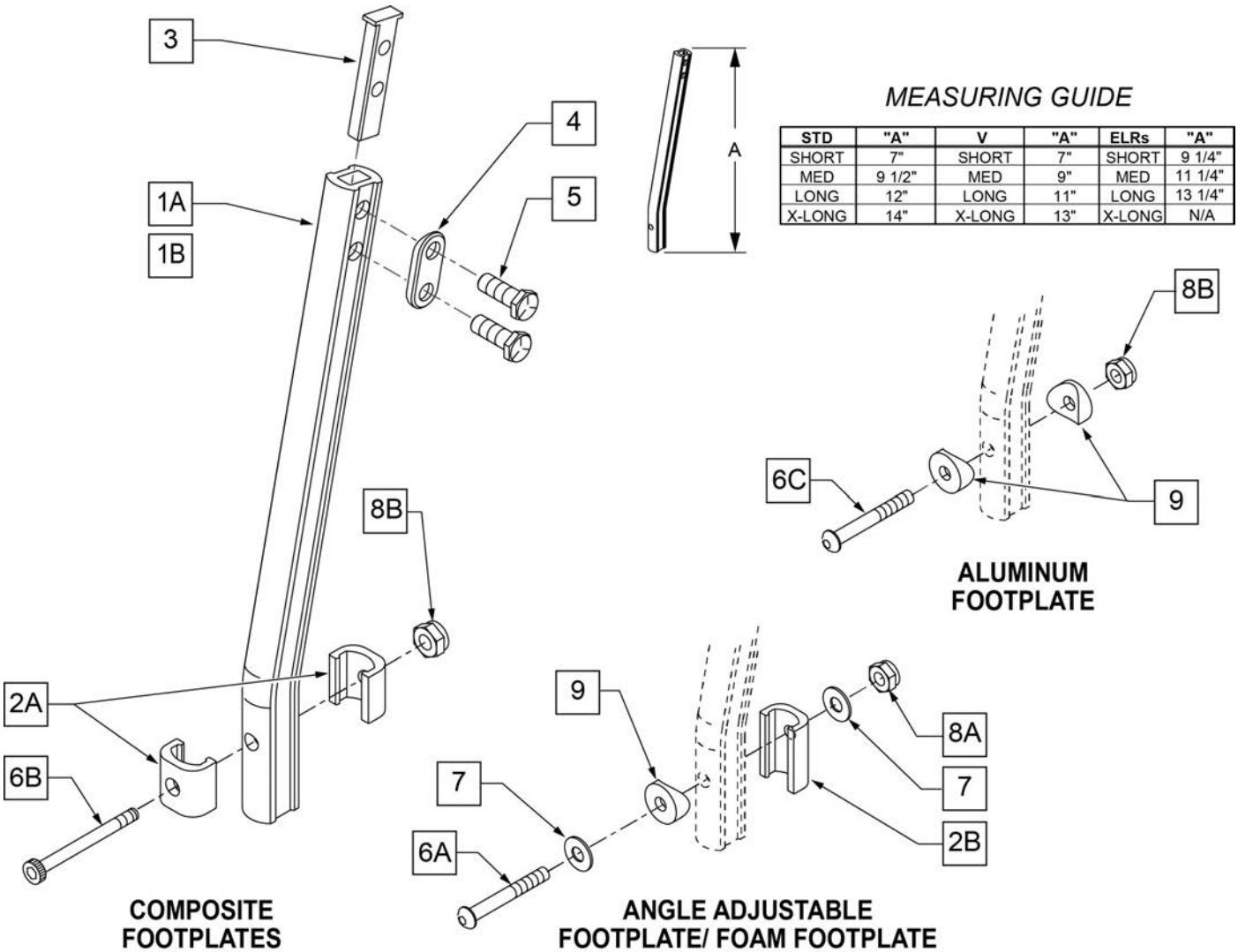

MEASURING GUIDE

STD	"A"	V	"A"	ELRs	"A"
SHORT	7"	SHORT	7"	SHORT	9 1/4"
MED	9 1/2"	MED	9"	MED	11 1/4"
LONG	12"	LONG	11"	LONG	13 1/4"
X-LONG	14"	X-LONG	13"	X-LONG	N/A

Pos.	Item Number	Description	Remarks
1A	550819	EXT TUBE S/A ONLY SHT	Short Ext-Swing Away Hanger

Pos.	Item Number	Description	Remarks
1A	550820	EXT TUBE S/A ONLY MED	Med Ext-Swing Away Hanger
1A	550821	EXT TUBE S/A ONLY LONG	Long Ext-Swing Away Hanger
1A	550822	EXT TUBE S/A ONLY X-LONG	X-Long Ext-Swing Away Hanger
1B	550834	EXT TUBE V IN ONLY D2 SHT R	Right Short Ext-Swing Away Hanger
1B	550835	EXT TUBE V IN ONLY D2 SHT L	Left Short Ext-Swing Away Hanger
1B	550836	EXT TUBE V IN ONLY D2 MED R	Right Med Ext-Swing Away Hanger
1B	550837	EXT TUBE V IN ONLY D2 MED L	Left Med Ext-Swing Away Hanger
1B	550838	EXT TUBE V IN ONLY D2 LONG R	Right Long Ext-Swing Away Hanger
1B	550839	EXT TUBE V IN ONLY D2 LONG L	Left Long Ext-Swing Away Hanger
1B	550840	EXT TUBE V IN ONLY D2 X-LONG R	Right X-Long Ext-Swing Away Hanger
1B	550841	EXT TUBE V IN ONLY D2 X-LONG L	Left X-Long Ext-Swing Away Hanger
2A	483718	HANGER EXTENSION SADDLE	USE W/ COMPOSITE FTPLT
2B	483720	HANGER EXTENSION SADDLE LONG	USE W/ ANGLE ADJ FTPLT
3	500078	INSERT D2 EXT TUBE	
4	483717	HANGER SADDLE	
5	221102	1/4-28 x 3/4 HEX HEAD C/S BLK W/PTCH	
6A	106962	1/4-28 x 1 3/4 BH C/S BLK ZN	USE W/ ANGLE ADJ FTPLT
6B	226165	1/4 -28 x 2 1/2 SOC C/S	USE W/ COMPOSITE FTPLT
6C	226147	1/4 -28 X 1.85 BH C/S	
7	106945	1/4" SAE WASHER	
8A	106941	1/4 -28 AUTOMATION NUT	USE W/ ANGLE ADJ FTPLT
8B	106935	1/4 -28 NYLOCK NUT THIN	USE W/ COMPOSITE FTPLT
9	561055	3/4 SADDLE 1" OD	USE W/ ANGLE ADJ FTPLT
1A,2A-5	921759	EXT TUBE S/A SHT ASSM PCKT	USE W/ COMPOSITE FTPLT
1A,2A-5	921760	EXT TUBE S/A MED ASSM PCKT	USE W/ COMPOSITE FTPLT
1A,2A-5	921761	EXT TUBE S/A LONG ASSM PCKT	USE W/ COMPOSITE FTPLT
1A,2A-5	921762	EXT TUBE S/A X-LONG ASSM PCKT	USE W/ COMPOSITE FTPLT
1B,2A-5	921751	EXT TUBE "V" D2 SHT R ASSM PCKT	RIGHT - USE W/ COMPOSITE FTPLT V HANGER
1B,2A-5	921752	EXT TUBE "V" D2 SHT L ASSM PCKT	LEFT - USE W/ COMPOSITE FTPLT V HANGER
1B,2A-5	921753	EXT TUBE "V" D2 MED R ASSM PCKT	RIGHT - USE W/ COMPOSITE FTPLT V HANGER
1B,2A-5	921754	EXT TUBE "V" D2 MED L ASSM PCKT	LEFT - USE W/ COMPOSITE FTPLT V HANGER
1B,2A-5	921755	EXT TUBE "V" D2 LONG R ASSM PCKT	RIGHT - USE W/ COMPOSITE FTPLT V HANGER
1B,2A-5	921756	EXT TUBE "V" D2 LONG L ASSM PCKT	LEFT - USE W/ COMPOSITE FTPLT V HANGER
1B,2A-5	921757	EXT TUBE "V" D2 X-LONG R ASSM PCKT	RIGHT - USE W/ COMPOSITE FTPLT V HANGER
1B,2A-5	921758	EXT TUBE "V" D2 X-LONG L ASSM PCKT	LEFT - USE W/ COMPOSITE FTPLT V HANGER
1A,2A-7,9	921772	EXT TUBE S/A SHT ANG ADJ PCKT	USE W/ ANGLE ADJ FTPLT
1A,2A-7,9	921773	EXT TUBE S/A MED ANG ADJ PCKT	USE W/ ANGLE ADJ FTPLT
1A,2A-7,9	921774	EXT TUBE S/A LONG ANG ADJ PCKT	USE W/ ANGLE ADJ FTPLT
1A,2A-7,9	921775	EXT TUBE S/A X-LONG ANG ADJ PCKT	USE W/ ANGLE ADJ FTPLT
1B,2A-7,9	921764	EXT TUBE "V" D2 SHT R ANG ADJ PCKT	RIGHT - USE W/ ANGLE ADJ FTPLT V HANGER
1B,2A-7,9	921765	EXT TUBE "V" D2 SHT L ANG ADJ PCKT	LEFT - USE W/ ANGLE ADJ FTPLT V HANGER
1B,2A-7,9	921766	EXT TUBE "V" D2 MED R ANG ADJ PCKT	RIGHT - USE W/ ANGLE ADJ FTPLT V HANGER
1B,2A-7,9	921767	EXT TUBE "V" D2 MED L ANG ADJ PCKT	LEFT - USE W/ ANGLE ADJ FTPLT V HANGER
1B,2A-7,9	921768	EXT TUBE "V" D2 LONG R ANG ADJ PCKT	RIGHT - USE W/ ANGLE ADJ FTPLT V HANGER
1B,2A-7,9	921769	EXT TUBE "V" D2 LONG L ANG ADJ PCKT	LEFT - USE W/ ANGLE ADJ FTPLT V HANGER
1B,2A-7,9	921770	EXT TUBE "V" D2 X-LONG R ANG AD PCKT	RIGHT - USE W/ ANGLE ADJ FTPLT V HANGER
1B,2A-7,9	921771	EXT TUBE "V" D2 X-LONG L ANG AD PCKT	LEFT - USE W/ ANGLE ADJ FTPLT V HANGER

ELR ALUMINUM FOOTPLATE

NOTE: Left Side Shown

ADD INSET FORMULA
0” Inset (Seat Width) = Footrest Width
1” Inset (Seat Width) -2” = Footrest Width
2” Inset (Seat Width) -4” = Footrest Width
“V” Hanger (Seat Width) -4” = Footrest Width
Offset Hanger Receiver (Seat Width) +2” = Footrest Width
Flared Frame (Seat Width) = 2” = Footrest Width

To have complete Footrest ship assembled, choose compatible Hanger + Footplate part numbers and add “ASSY-HNG-FP” to order

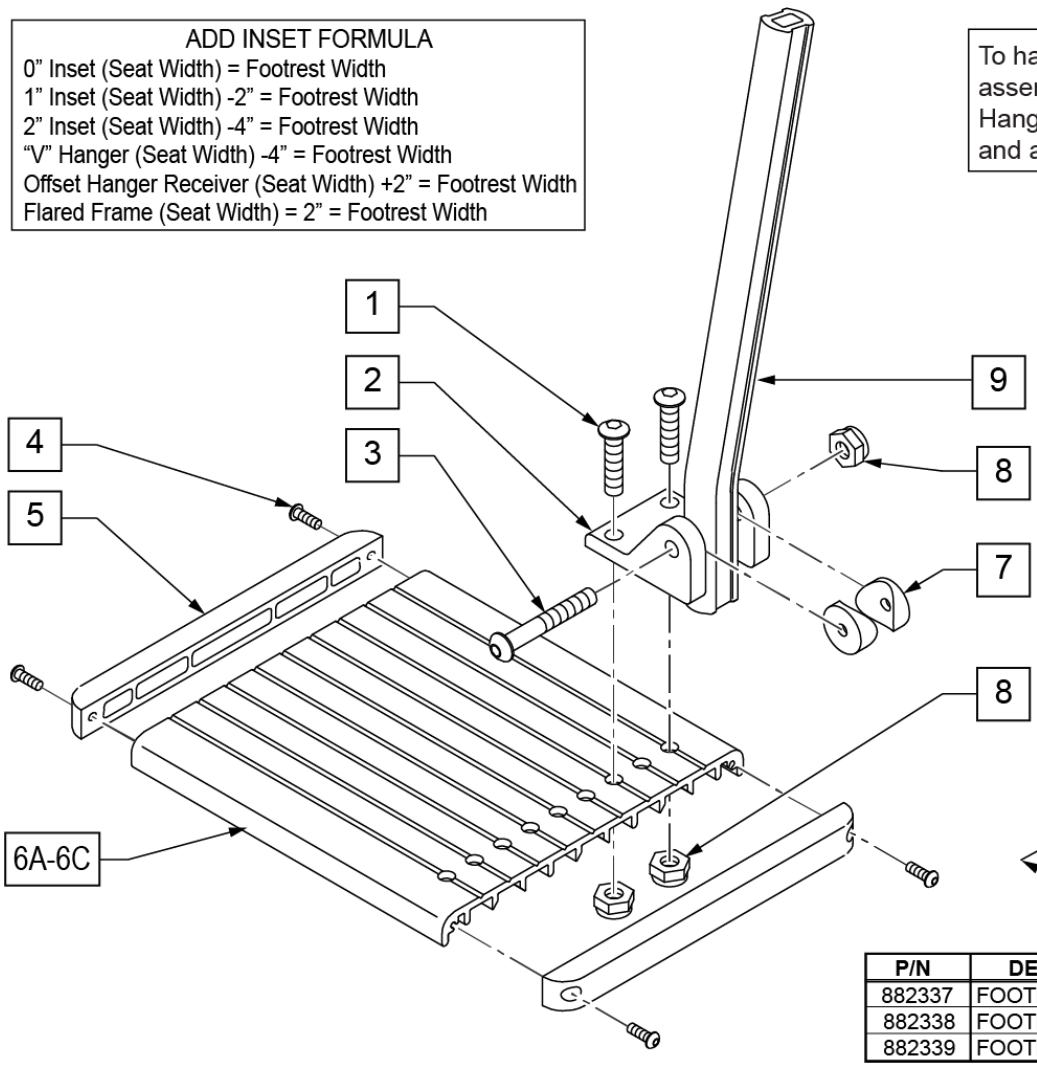

MEASURING GUIDE

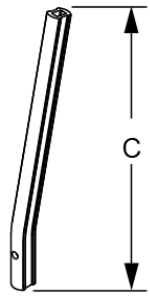

	"C"
SHORT	9 1/4"
MED	11 1/4"
LONG	13 1/4"

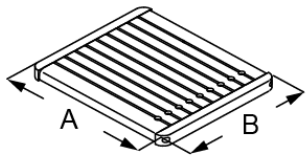

P/N	DESCRIPTION	“A”	"B"
882337	FOOTPLATE ELR 14-15"	6"	6"
882338	FOOTPLATE ELR 16-17"	7"	6"
882339	FOOTPLATE ELR 18-20"	8"	6"

Pos.	Item Number	Description	Remarks
1	106959	1/4-28 x 5/8 BH C/S	
2	550739	FOOTPLATE MOUNTING BRACKET	
3	226147	1/4-28 x 1.85 BH C/S	
4	281043	#4 x 5/8 PAN PHIL S/TAP	
5	560101	END CAPS FOOTREST	
7	561003	3/4" SADDLE THIN	
8	106935	1/4-28 NYLOCK NUT THIN	
9	550764	S/A HANGER EXT D2 SHORT BLACK	
9	550765	S/A HANGER EXT D2 MED BLK	
9	550766	S/A HANGER EXT D2 LONG BLACK	
4,5,6A	882337	ELR FOOTPLATE ASSEMBLY 14 -15"	
4,5,6B	882338	ELR FOOTPLATE ASSEMBLY 16 -17"	
4,5,6C	882339	ELR FOOTPLATE ASSEMBLY 18 -20"	
1-5,6A-8	921400S	ELR FOOTPLATE KIT 14 -15"	Does not include Extension
1-5,6B-8	921401S	ELR FOOTPLATE KIT 16 -17"	Does not include Extension
1-5,6C-8	921402S	ELR FOOTPLATE KIT 18 -20"	Does not include Extension
		Ship assembled part #	Use with multiple assemblies
	ASSY-HNG-FP	HANGER/FOOTPLATE ASSY REQUIRED	add with Hanger & Footplate kit

ADULT ANGLE-ADJUSTABLE FOOTPLATE EXT MOUNT

NOTE: FOR HIGH-MOUNT ADULT ANGLE-ADJUSTABLE FOOTPLATE, SEE "HIGH-MOUNT EXTENSION TUBE" PAGE.

NOTE: ORDER ITEMS 4B AND 7B FOR CHAIRS PRIOR TO 8/13/01.

NOTE: ONLY 1 WASHER PRIOR TO 8/13/01.

NOTE: See attached REFERENCE GUIDE.

To have complete Footrest ship assembled, choose compatible Hanger + Footplate part numbers and add “ASSY-HNG-FP” to order

INSET FORMULA
0” Inset (Seat Width) = Footrest Width
1” Inset (Seat Width) -2” = Footrest Width
“V” Hanger (Seat Width) -4” = Footrest Width
Offset Hanger Receiver (Seat Width) +2” = Footrest Width

MEASURING GUIDE

CHAIR WIDTH	“A”	“B”
10” - 11”	3 1/2”	7 1/4”
12” - 13”	4 1/2”	7 3/4”
14” - 15”	5 1/2”	7 3/4”
16” - 17”	6 1/2”	7 3/4”
18” - 20”	7 1/2”	7 3/4”

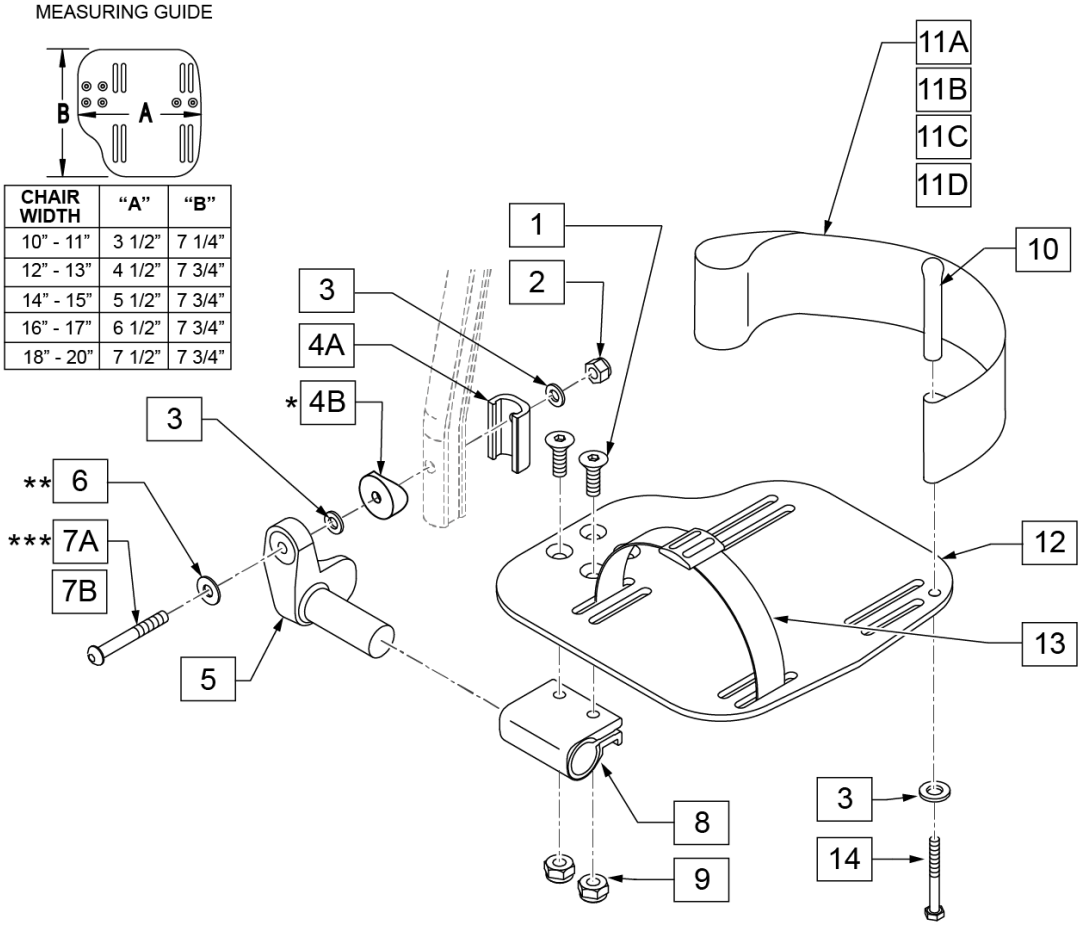

15 ADLT ANG ADJ FP D2 HDWR KIT

ITEM #	ILLUSTRATION	DESCRIPTION	QTY
1		1/4-28 X 7/8 FH C/S	2
2		1/4-28 AUTOMATION NUT	1
3		WASHER FLAT THIN AN 1/4	3
6		1/4" SAE WASHER	1
7A		BHCS 1/4-28 X 1-3/4	1
9		NUT NYLOCK THIN 1/4-28	2
10		HEEL LOOP PEG	1
14		1/4-20 X 1 HEX C/S	1

16 ADLT ANG ADJ FP RND HDWR KIT

ITEM #	ILLUSTRATION	DESCRIPTION	QTY
1		1/4-28 X 7/8 FH C/S	2
2		1/4-28 AUTOMATION NUT	1
3		WASHER FLAT THIN AN 1/4	3
4B		3/4" SADDLE 1" OD	1
6		1/4" SAE WASHER	1
7B		1/4-28 X 1.625 BH C/S BLK	1
9		NUT NYLOCK THIN 1/4-28	2
10		HEEL LOOP PEG	1
14		1/4-20 X 1 HEX C/S	1

Pos.	Item Number	Description	Remarks
1	106978	1/4-28 x 7/8 FH C/S	
2	106941	1/4-28 AUTOMATION NUT	

Pos.	Item Number	Description	Remarks
3	106944	WASHER FLAT THIN AN 1/4	
4A	483720	HANGER EXTENSION SADDLE LONG	USE W/ DOUBLE D EXT TUBE
4B	561055	3/4" SADDLE 1" OD	USE W/ ROUND EXT TUBE
5	541002	FTRST MOUNTING BRKT-3/8 RAD R	RIGHT
5	541003	FTRST MOUNTING BRKT-3/8 RAD L	LEFT
6	106945	WASHER FLAT SAE 1/4 ROHS	
7A	106962	BHCS 1/4-28 X 1-3/4 ROHS	use w/ Double D Ext Tube
7B	226167	1/4-28 x 1.625 BH C/S BLK	use w/ Round Ext Tube
8	550350	3/4" CLMP ADJ FT PLT	
9	106935	NUT NYLOCK THIN 1/4-28 ROHS	
10	561040	HEEL LOOP PEG	
11A	741154	HEEL LOOP 14-15 CMPST HEMI	used w/ 10-11" Adult Ang Adj Ftplts
11B	741155	HEEL LOOP 16-17 CMPST HEMI	used w/ 12 -13" Adult Ang Adj Ftplts
11C	741153	H/L 18-20 CMPST/14-15 ANG ADJ	used w/ 14-15"/16-17" Adult Ang Adj Ftplts
11D	741253	HEEL LOOP ADLT ADJ F/PLT 18-20	used w/ 18 -20" Adult Ang Adj Ftplts
12	500656	ADLT ANGL ADJ F/PLT 10/11" R	RIGHT
12	500657	ADLT ANGL ADJ F/PLT 10/11" L	LEFT
12	500658	ADLT ANGL ADJ F/PLT 12/13" R	RIGHT
12	500659	ADLT ANGL ADJ F/PLT 12/13" L	LEFT
12	500660	ADLT ANGL ADJ F/PLT 14/15	RIGHT
12	500661	ADLT ANGL ADJ F/PLT 14/15	LEFT
12	500662	ADLT ANGL ADJ F/PLT 16/17	RIGHT
12	500663	ADLT ANGL ADJ F/PLT 16/17	LEFT
12	500664	ADLT ANGL ADJ F/PLT 18-20	RIGHT
12	500665	ADLT ANGL ADJ F/PLT 18-20	LEFT
13	740260	TOE/ANKLE STRAP ADJ ADLT F/PLT	
14	106958	1/4-20 x 1 HEX C/S	
15	101533	ADLT ANG ADJ FP D2 HDWR KIT	for Double D Ext Tubes; Kit for one side
16	101534	ADLT ANG ADJ FP RND HDWR KIT	for Round Ext Tubes (Q2 HP only); Kit for one side
1-3,5,6,8,9,12	820526	AD ANG ADJ F/PLT R 12"/13" OMIT HL	RIGHT
1-3,5,6,8,9,12	820536	AD ANG ADJ F/PLT L 12"/13" OMT HL	LEFT
1-3,5,6,8,9,12	820460	FP ADLT ADJ 14/15 OMIT HL	RIGHT
1-3,5,6,8,9,12	820462	FP ADLT ADJ 14/15 OMIT HL	LEFT
1-3,5,6,8,9,12	820464	FP ADLT ADJ 16/17 OMIT HL	RIGHT
1-3,5,6,8,9,12	820466	FP ADLT ADJ 16/17 OMIT HL	LEFT
1-3,5,6,8,9,12	820468	FP ADLT ADJ 18-20 OMIT HL	RIGHT
1-3,5,6,8,9,12	820470	FP ADLT ADJ 18-20 OMIT HL	LEFT
1-3,5,6,8,9,12	921466	ADLT ANGL ADJ F/PLT 12"/13" OMIT HL	PAIR
1-3,5,6,8,9,12	921320	FP ADLT ADJ 14/15 OMIT HL	PAIR
1-3,5,6,8,9,12	921322	FP ADLT ADJ 16/17 OMIT HL	PAIR
1-3,5,6,8,9,12	921324	FP ADLT ADJ 18-20 OMIT HL	PAIR
1-3,5,6,8,9,11B,12	820522	AD ANGL ADJ F/PLT R 12/13" H/L	RIGHT
1-3,5,6,8,9,11B,12	820532	AD ANGL ADJ F/PLT L 12/13" H/L	LEFT
1-3,5,6,8-10,11C, 12,14	820461	FP ADLT ADJ 14/15 HL	RIGHT
1-3,5,6,8-10,11C, 12,14	820463	FP ADLT ADJ 14/15 HL	LEFT
1-3,5,6,8-10,11C, 12,14	820465	FP ADLT ADJ 16/17 HL	RIGHT
1-3,5,6,8-10,11C, 12,14	820467	FP ADLT ADJ 16/17 HL	LEFT
1-3,5,6,8-10,11D, 12,14	820469	FP ADLT ADJ 18-20 HL	RIGHT
1-3,5,6,8-10,11D, 12,14	820471	FP ADLT ADJ 18-20 HL	LEFT
1-3,5,6,8-10,11B, 12,14	921462	ADLT ANGL ADJ F/PLATE 12"/13" HL	PAIR
1-3,5,6,8-10,11C, 12,14	921321	FP ADLT ADJ 14/15 HL	PAIR
1-3,5,6,8-10,11C, 12,14	921323	FP ADLT ADJ 16/17 HL	PAIR
1-3,5,6,8-10,11D, 12,14	921325	FP ADLT ADJ 18-20 HL	PAIR
		Ship assembled part #	Use with multiple assemblies
	ASSY-HNG-FP	HANGER/FOOTPLATE ASSY REQUIRED	add with Hanger & Footplate kit

KIDS ANGLE ADJUSTABLE FOOTPLATE EXT MOUNT

Note: Footplate Assemblies are set to footrest width; please see "Footplate Formula" table for seat width conversion.

Note: V Style Hangers are not available on Swing Away Style chairs effective 7/14/14; see the "Prior To" ordering guide for V Style footplate assemblies.

Note: Zippie Iris (ZRS&ZRSE) and Zippie TS (Z1A&Z1SE) only use Straight Extension Tube.

Note: if chair has High Mount Ext Tubes or if switching to High Mount Ext Tubes, see KAA Footplate w/ High Mount Extension Ordering Guide.

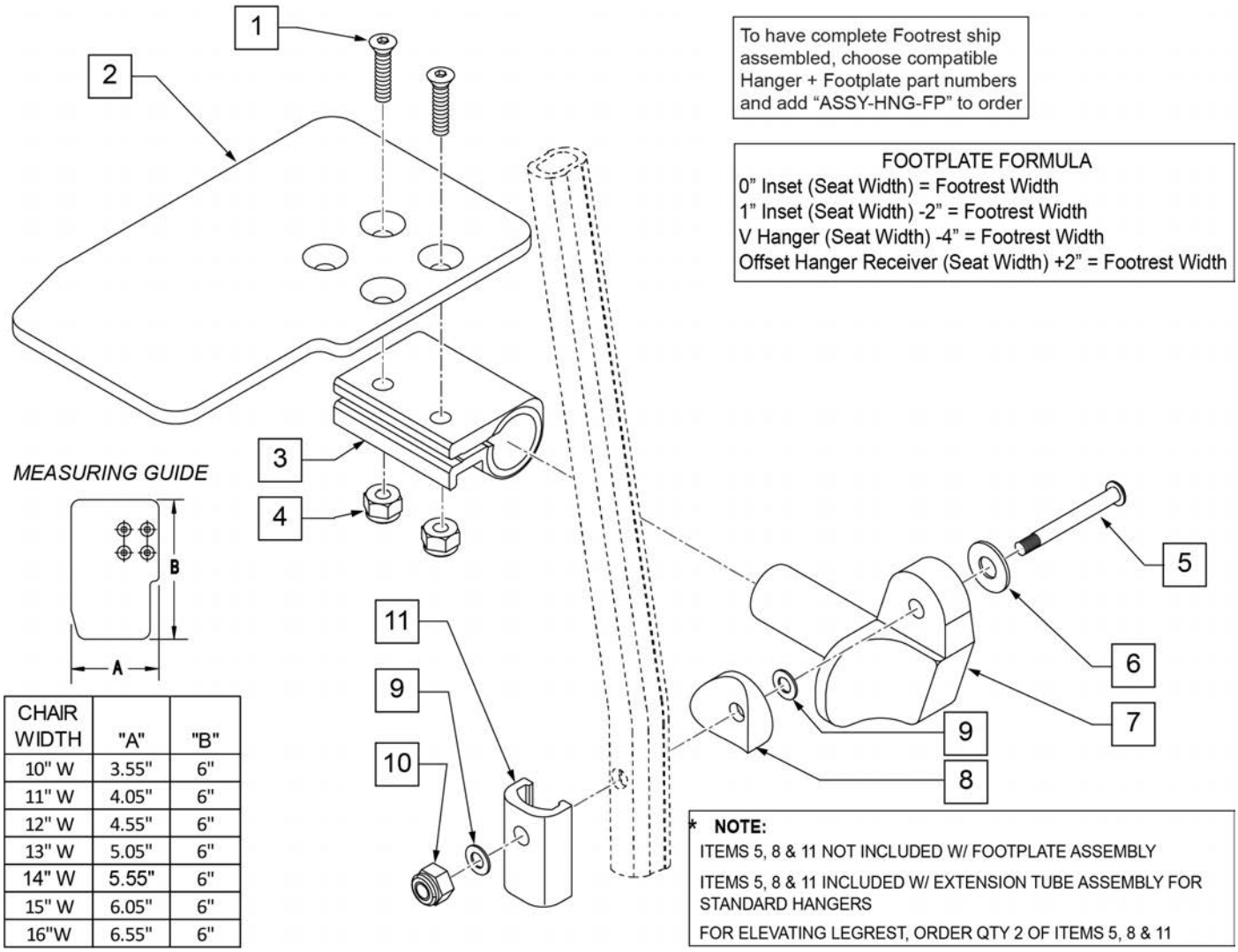

CHAIR WIDTH	"A"	"B"
10" W	3.55"	6"
11" W	4.05"	6"
12" W	4.55"	6"
13" W	5.05"	6"
14" W	5.55"	6"
15" W	6.05"	6"
16"W	6.55"	6"

Pos.	Item Number	Description	Remarks
1	106978	FHCS 1/4 -28 x 7/8 ROHS	

Pos.	Item Number	Description	Remarks
2	500635	KIDS ANGL ADJ F/PLT 10" R	Right
2	500636	KIDS ANGL ADJ F/PLT 10" L	Left
2	500637	KIDS ANGL ADJ F/PLT 11" R	Right
2	500638	KIDS ANGL ADJ F/PLT 11" L	Left
2	500639	KIDS ANGL ADJ F/PLT 12" R	Right
2	500640	KIDS ANGL ADJ F/PLT 12" L	Left
2	500641	KIDS ANGL ADJ F/PLT 13" R	Right
2	500642	KIDS ANGL ADJ F/PLT 13" L	Left
2	500643	KIDS ANGL ADJ F/PLT 14" R	Right
2	500644	KIDS ANGL ADJ F/PLT 14" L	Left
2	500645	KIDS ANGL ADJ F/PLT 15" R	Right
2	500646	KIDS ANGL ADJ F/PLT 15" L	Left
2	500647	KIDS ANGL ADJ F/PLT 16" R	Right
2	500648	KIDS ANGL ADJ F/PLT 16" L	Left
3	550350	3/4" CLAMP ADJ FOOTPLATE	
4	106935	NUT NYLOCK THIN 1/4 -28 ROHS	
5	106962	1/4-28 x 1 3/4 BH C/S BLK ZN (D2 EXTENSION TUBES)	
5	226167	1/4-28 x 1.625 BH C/S BLK (ROUND EXTENSION TUBES)	
6	106945	1/4 SAE WASHER	
7	541002	FTRST MOUNTING BRKT-3/8 RAD R	
7	541003	FTRST MOUNTING BRKT-3/8 RAD L	
8	561055	3/4" SADDLE 1" OD	
9	106944	WASHER FLAT THIN AN 1/4 ROHS	
10	106941	NUT AUTOMATION 1/4 -28 ROHS	
11	483720	HANGER EXTENSION SADDLE LONG	Use with Double D Ext Tube
1-4,6,7,9,10	828850	KIDS ANG ADJ F/PLT EXT-MNT 10"R	Right
1-4,6,7,9,10	828851	KIDS ANG ADJ F/PLT EXT-MNT 10"L	Left
1-4,6,7,9,10	828852	KIDS ANG ADJ F/PLT EXT-MNT 11"R	Right
1-4,6,7,9,10	828853	KIDS ANG ADJ F/PLT EXT-MNT 11"L	Left
1-4,6,7,9,10	828854	KIDS ANG ADJ F/PLT EXT-MNT 12"R	Right
1-4,6,7,9,10	828855	KIDS ANG ADJ F/PLT EXT-MNT 12"L	Left
1-4,6,7,9,10	828856	KIDS ANG ADJ F/PLT EXT-MNT 13"R	Right
1-4,6,7,9,10	828857	KIDS ANG ADJ F/PLT EXT-MNT 13"L	Left
1-4,6,7,9,10	828858	KIDS ANG ADJ F/PLT EXT-MNT 14"R	Right
1-4,6,7,9,10	828859	KIDS ANG ADJ F/PLT EXT-MNT 14"L	Left
1-4,6,7,9,10	828860	KIDS ANG ADJ F/PLT EXT-MNT 15"R	Right
1-4,6,7,9,10	828861	KIDS ANG ADJ F/PLT EXT-MNT 15"L	Left
1-4,6,7,9,10	828862	KIDS ANG ADJ F/PLT EXT-MNT 16"R	Right
1-4,6,7,9,10	828863	KIDS ANG ADJ F/PLT EXT-MNT 16"L	Left
1-4,6,7,9,10	921280	KIDS ANG ADJ F/PLT EXT-MNT 10"	Pair
1-4,6,7,9,10	921281	KIDS ANG ADJ F/PLT EXT-MNT 11"	Pair
1-4,6,7,9,10	921282	KIDS ANG ADJ F/PLT EXT-MNT 12"	Pair
1-4,6,7,9,10	921283	KIDS ANG ADJ F/PLT EXT-MNT 13"	Pair
1-4,6,7,9,10	921284	KIDS ANG ADJ F/PLT EXT-MNT 14"	Pair
1-4,6,7,9,10	921285	KIDS ANG ADJ F/PLT EXT-MNT 15"	Pair
1-4,6,7,9,10	921286	KIDS ANG ADJ F/PLT EXT-MNT 16"	Pair
		Ship assembled part #	Use with multiple assemblies
	ASSY-HNG-FP	HANGER/FOOTPLATE ASSY REQUIRED	add with Hanger & Footplate kit

90 DEG ELEVATING HANGER

NOTE: Order Item 27 (561002) when NOT using Footrest Extension.

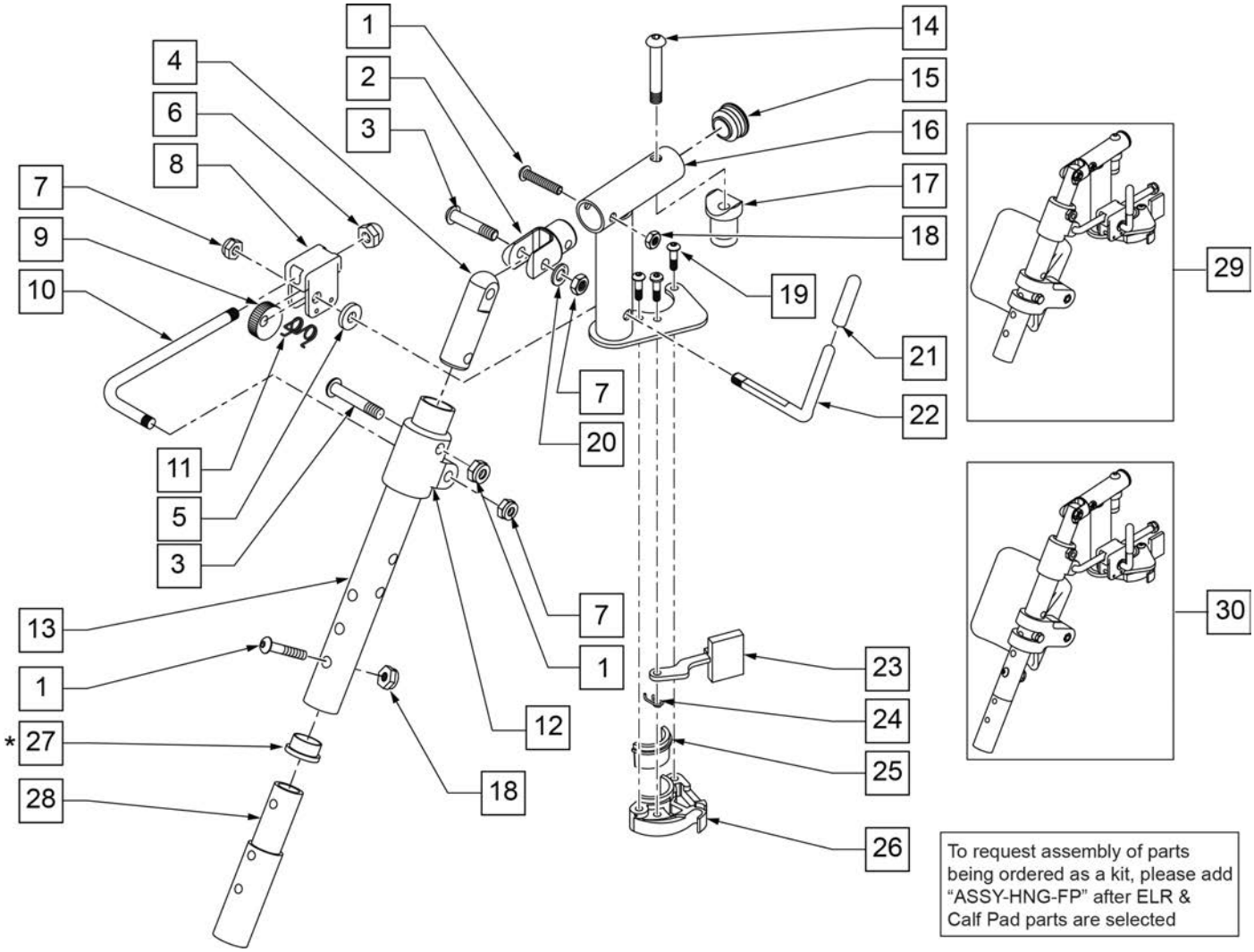

Pos.	Item Number	Description	Remarks
1	107027	BHCS 1/4-28 X 1-1/4 SHLDR ROHS	
2	505281	ELR CLEVIS	
3	107037	BHCS 5/16-24 X 1-1/2 SHLD ROHS	
4	540252	ELR PIVOT PRS	
5	561059	3/4 OD x .318 ID WASHER	
6	202109	5/16-24 ACORN NUT HEX	
7	106939	NUT NYLOCK THIN 5/16-24 ROHS	
8	880990	ELR LOCK HOUSING W/PIN	
9	481119	ELR CAM LOCKING POWDERED METAL	
10	481505	ELR LOCK ROD 90D	
11	321106	ELR TORSION SPRING	
12	560430	ELR ROD UPPER PIVOT	
13	505097S	ELR KIDS TUBE	SPECIFY COLOR
14	106983	BHCS 5/16-18 X 2 SHLDR ROHS	
15	561062	1" INSERT PLUG .065 RIBS	

Pos.	Item Number	Description	Remarks
17	561197	PLASTIC PIVOT SADDLE	
18	106935	NUT NYLOCK THIN 1/4-28 ROHS	
19	107035	BHCS 10-24 X .725 PL ROHS	
20	263100	5/16 AN WASHER FLAT	
21	561049	ELR RELEASE ROD COVER	
23	561079	S/A LATCH LEVER	
24	321136	S/A SPRING L RED	
24	321137	S/A SPRING R CLEAR	
27	561002	1" INSERT PLUG .083	
29	923067S	ELR HNGR ASSM 90D W/PAD	PAIR
30	923068S	ELR HNGR ASSM 90D W/PAD 2" EXT	PAIR
1,18,28	111505	2" FTREST EXT W/ HDWR	
25,26	881500	LATCH BLOCK ASSM R	RIGHT
25,26	881501	LATCH BLOCK ASSM L	LEFT
21,22	882411	ELR 90D ACTUATION ARM ASSM	
1-4,7,14-20,23-28	882413	ELR PIVOT BLOCK ASSM R	RIGHT
1-4,7,14-20,23-28	882414	ELR PIVOT BLOCK ASSM L	LEFT
1-26	641458S	ELR HNGR 90D W/O PAD PNTD R	RIGHT
1-26	641459S	ELR HNGR 90D W/O PAD PNTD L	LEFT
1-26,28	641468S	HANGER ELR 90 W/O PAD R 2" EXT	RIGHT
1-26,28	641469S	HANGER ELR 90 W/O PAD L 2" EXT	LEFT
19,23-26	881521	S/A LATCH KIT CASTING RIGHT	RIGHT
19,23-26	881522	S/A LATCH KIT CASTING LEFT	LEFT
		Ship assembled part #	Use with multiple assemblies
	ASSY-HNG-FP	HANGER/FOOTPLATE ASSY REQUIRED	add with Hanger & Footplate kit

90 DEG ELEVATING CALF PAD

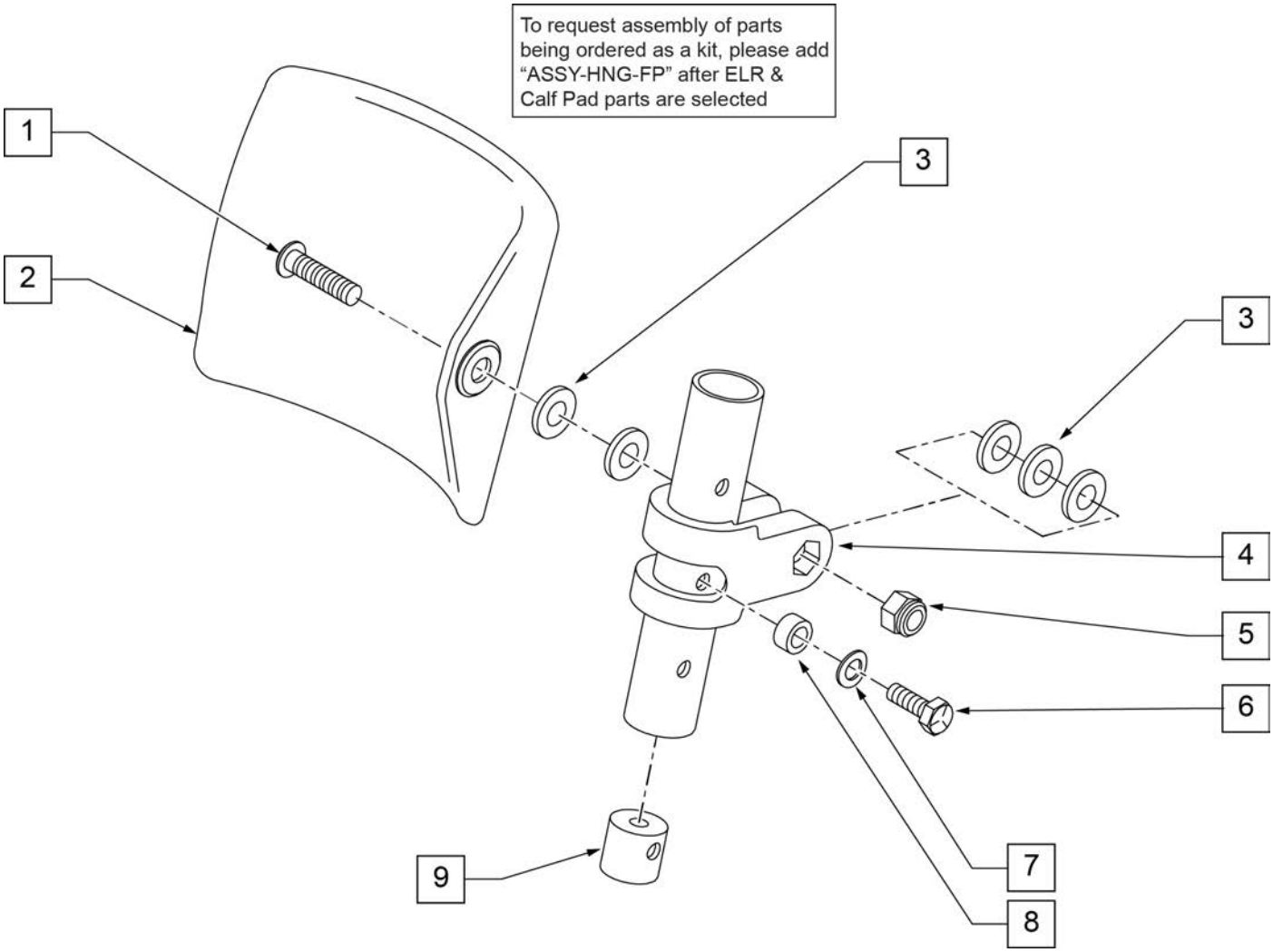

Pos.	Item Number	Description	Remarks
1	226217	5/16-18 x 2" BH C/S BLK	
2	755013	CALF PAD TROUGH STYLE KIDS	
3	561016	1" WASHER 5/16" HOLE	
4	561097	ELR ELEVATING TUBE CLAMP	
5	106937	5/16 -18 NYLOCK NUT THIN	
6	106958	HHCS 1/4-20 X 1 ROHS	
7	262130	6mm WASHER WAVE	
8	483027	1/4 x 1/4 ALUMINUM SPACER	
9	500151	KIDS ALR RETAINING PLUG	
1-9	880533	ELR TROUGH PAD ASSM KIDS	
		Ship assembled part #	Use with multiple assemblies
	ASSY-HNG-FP	HANGER/FOOTPLATE ASSY REQUIRED	add with Hanger & Footplate kit

FRONT MOUNT HANGER EXT

[02/2010]

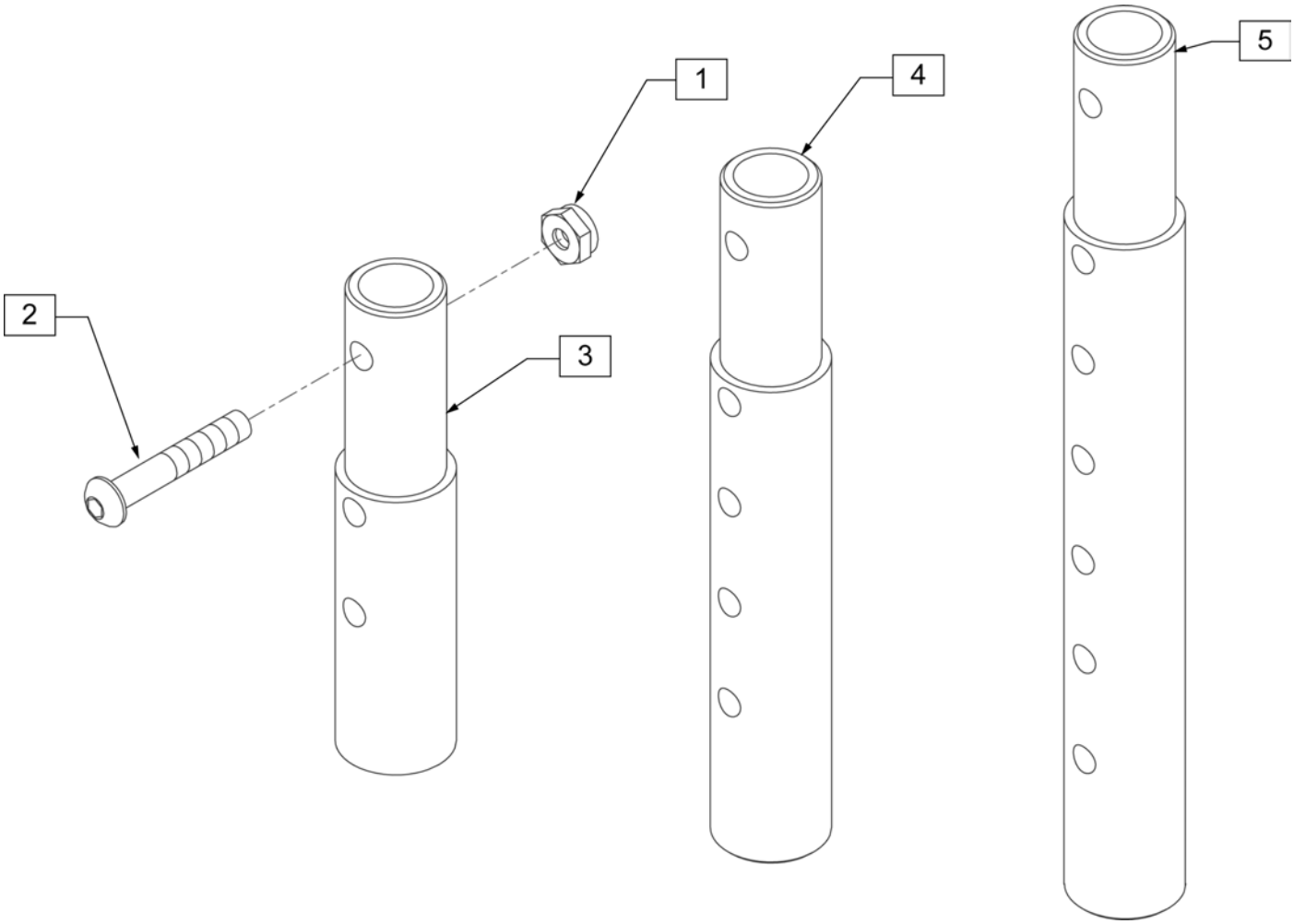

Pos.	Item Number	Description	Remarks
1	106935	NUT NYLOCK THIN 1/4 -28 ROHS	
2	106961	BHCS 1/4 -28 x 1 1/4 ROHS	
1-3	111505	2" FOOTREST EXTENSION TUBE W/ HDWR ASSM	2" EXT (PAIR)
1, 2, 4	111506	4" FOOTREST EXTENSION TUBE W/ HDWR ASSM	4" EXT (PAIR)
1, 2, 5	111507	6" FOOTREST EXTENSION TUBE W/ HDWR ASSM	6" EXT (PAIR)

KIDS ANGLE ADJ FOOTPLATE FRONT MOUNT

To have complete Footrest ship assembled, choose compatible Hanger + Footplate part numbers and add “ASSY-HNG-FP” to order

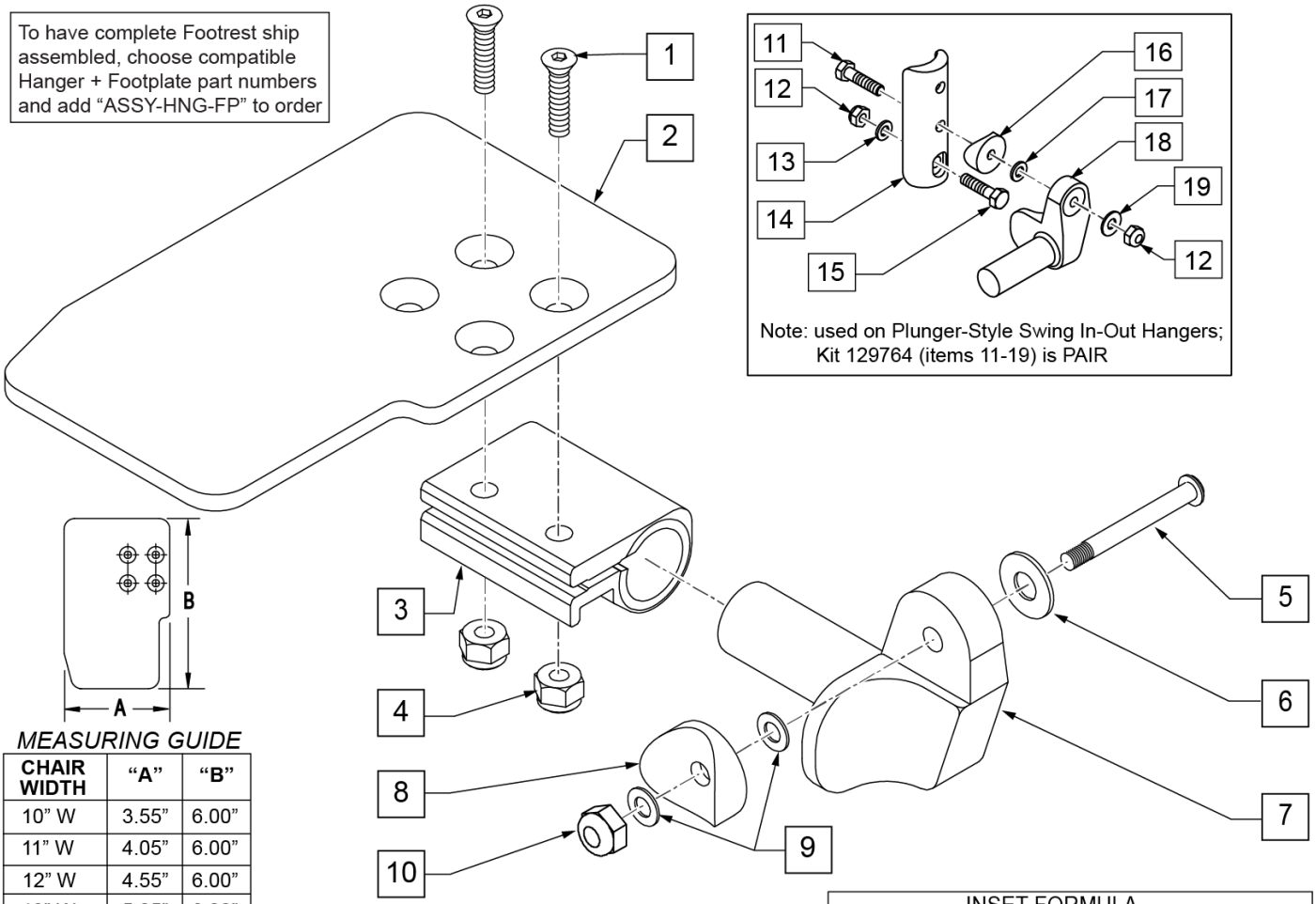

Note: used on Plunger-Style Swing In-Out Hangers; Kit 129764 (items 11-19) is PAIR

MEASURING GUIDE

CHAIR WIDTH	“A”	“B”
10” W	3.55”	6.00”
11” W	4.05”	6.00”
12” W	4.55”	6.00”
13” W	5.05”	6.00”
14” W	5.55”	6.00”
15” W	6.05”	6.00”
16” W	6.55”	6.00”

INSET FORMULA

0” Inset (Seat Width) = Footrest Width
1” Inset (Seat Width) -2” = Footrest Width
“V” Hanger (Seat Width) -4” = Footrest Width
Offset Hanger Receiver (Seat Width) +2” = Footrest Width

Pos.	Item Number	Description	Remarks
1	106978	FHCS 1/4-28 X 7/8 ROHS	
2	500635	KIDS ANGL ADJ F/PLT 10	RIGHT
2	500636	KIDS ANGL ADJ F/PLT 10	LEFT
2	500637	KIDS ANGL ADJ F/PLT 11	RIGHT
2	500638	KIDS ANGL ADJ F/PLT 11	LEFT
2	500639	KIDS ANGL ADJ F/PLT 12	RIGHT
2	500640	KIDS ANGL ADJ F/PLT 12	LEFT
2	500641	KIDS ANGL ADJ F/PLT 13	RIGHT
2	500642	KIDS ANGL ADJ F/PLT 13	LEFT
2	500643	KIDS ANGL ADJ F/PLT 14	RIGHT
2	500644	KIDS ANGL ADJ F/PLT 14	LEFT
2	500645	KIDS ANGL ADJ F/PLT 15	RIGHT
2	500646	KIDS ANGL ADJ F/PLT 15	LEFT
2	500647	KIDS ANGL ADJ F/PLT 16	RIGHT
2	500648	KIDS ANGL ADJ F/PLT 16	LEFT
3	550350	3/4 CLAMP ADJ FOOTPLATE	
4	106935	NUT NYLOCK THIN 1/4-28 ROHS	
5	226147	1/4-28 X 1.85 BH C/S BLK ZN	

Pos.	Item Number	Description	Remarks
6	106945	WASHER FLAT SAE 1/4 ROHS	
7	541000	FTRST MOUNTING BRKT 1/2" RAD R	RIGHT
7	541001	FTRST MOUNTING BRKT 1/2" RAD L	LEFT
8	561004	1 SADDLE 1/4 HOLE	
9	106943	WASHER FLAT THIN AN 1/4	
10	106941	NUT AUTOMATION 1/4-28 ROHS	
11	102268-001	HHCS M6 X 1 X 25	
12	132626	NUT AUTOMATION M6 X 1.0 ROHS	
13	107383	WASHER FLAT M6 ROHS	
15	118198	HHCS M6 X 1 X 40 PART NP	
16	561004	1" SADDLE 1/4" HOLE	
17	106943	WASHER FLAT AN 1/4 ROHS	
19	106945	WASHER FLAT SAE 1/4 ROHS	
1-4	158632	KAA F/PLT KIT 10 RT	RIGHT; used with Front Mount Adapter Kit on Plunger-Style Swing In/Out Hangers
1-4	158633	KAA F/PLT KIT 10 LT	LEFT; used with Front Mount Adapter Kit on Plunger-Style Swing In/Out Hangers
1-4	158634	KAA F/PLT KIT 11 RT	RIGHT; used with Front Mount Adapter Kit on Plunger-Style Swing In/Out Hangers
1-4	158635	KAA F/PLT KIT 11 LT	LEFT; used with Front Mount Adapter Kit on Plunger-Style Swing In/Out Hangers
1-4	158636	KAA F/PLT KIT 12 RT	RIGHT; used with Front Mount Adapter Kit on Plunger-Style Swing In/Out Hangers
1-4	158637	KAA F/PLT KIT 12 LT	LEFT; used with Front Mount Adapter Kit on Plunger-Style Swing In/Out Hangers
1-4	158638	KAA F/PLT KIT 13 RT	RIGHT; used with Front Mount Adapter Kit on Plunger-Style Swing In/Out Hangers
1-4	158639	KAA F/PLT KIT 13 LT	LEFT; used with Front Mount Adapter Kit on Plunger-Style Swing In/Out Hangers
1-4	158640	KAA F/PLT KIT 14 RT	RIGHT; used with Front Mount Adapter Kit on Plunger-Style Swing In/Out Hangers
1-4	158641	KAA F/PLT KIT 14 LT	LEFT; used with Front Mount Adapter Kit on Plunger-Style Swing In/Out Hangers
1-4	158642	KAA F/PLT KIT 15 RT	RIGHT; used with Front Mount Adapter Kit on Plunger-Style Swing In/Out Hangers
1-4	158643	KAA F/PLT KIT 15 LT	LEFT; used with Front Mount Adapter Kit on Plunger-Style Swing In/Out Hangers
1-4	158644	KAA F/PLT KIT 16 RT	RIGHT; used with Front Mount Adapter Kit on Plunger-Style Swing In/Out Hangers
1-4	158645	KAA F/PLT KIT 16 LT	LEFT; used with Front Mount Adapter Kit on Plunger-Style Swing In/Out Hangers
1-10	828821	KIDS ANG ADJ F/PLT ASSM 10	RIGHT; used with Old-Style Latch Block Swing In/Out & S/A Hangers
1-10	828822	KIDS ANG ADJ F/PLT ASSM 10	LEFT; used with Old-Style Latch Block Swing In/Out & S/A Hangers
1-10	828823	KIDS ANG ADJ F/PLT ASSM 11	RIGHT; used with Old-Style Latch Block Swing In/Out & S/A Hangers
1-10	828824	KIDS ANG ADJ F/PLT ASSM 11	LEFT; used with Old-Style Latch Block Swing In/Out & S/A Hangers
1-10	828825	KIDS ANG ADJ F/PLT ASSM 12	RIGHT; used with Old-Style Latch Block Swing In/Out & S/A Hangers
1-10	828826	KIDS ANG ADJ F/PLT ASSM 12	LEFT; used with Old-Style Latch Block Swing In/Out & S/A Hangers
1-10	828827	KIDS ANG ADJ F/PLT ASSM 13	RIGHT; used with Old-Style Latch Block Swing In/Out & S/A Hangers
1-10	828828	KIDS ANG ADJ F/PLT ASSM 13	LEFT; used with Old-Style Latch Block Swing In/Out & S/A Hangers
1-10	828829	KIDS ANG ADJ F/PLT ASSM 14	RIGHT; used with Old-Style Latch Block Swing In/Out & S/A Hangers
1-10	828830	KIDS ANG ADJ F/PLT ASSM 14	LEFT; used with Old-Style Latch Block Swing In/Out & S/A Hangers
1-10	828831	KIDS ANG ADJ F/PLT ASSM 15	RIGHT; used with Old-Style Latch Block Swing In/Out & S/A Hangers
1-10	828832	KIDS ANG ADJ F/PLT ASSM 15	LEFT; used with Old-Style Latch Block Swing In/Out & S/A Hangers

Pos.	Item Number	Description	Remarks
1-10	828833	KIDS ANG ADJ F/PLT ASSM 16	RIGHT; used with Old-Style Latch Block Swing In/Out & S/A Hangers
1-10	828834	KIDS ANG ADJ F/PLT ASSM 16	LEFT; used with Old-Style Latch Block Swing In/Out & S/A Hangers
1-10	921226	KIDS ANG ADJ F/PLT ASSM 10	PAIR; used with Old-Style Latch Block Swing In/Out & S/A Hangers
1-10	921227	KIDS ANG ADJ F/PLT ASSM 11	PAIR; used with Old-Style Latch Block Swing In/Out & S/A Hangers
1-10	921228	KIDS ANG ADJ F/PLT ASSM 12	PAIR; used with Old-Style Latch Block Swing In/Out & S/A Hangers
1-10	921229	KIDS ANG ADJ F/PLT ASSM 13	PAIR; used with Old-Style Latch Block Swing In/Out & S/A Hangers
1-10	921230	KIDS ANG ADJ F/PLT ASSM 14	PAIR; used with Old-Style Latch Block Swing In/Out & S/A Hangers
1-10	921231	KIDS ANG ADJ F/PLT ASSM 15	PAIR; used with Old-Style Latch Block Swing In/Out & S/A Hangers
1-10	921232	KIDS ANG ADJ F/PLT ASSM 16	PAIR; used with Old-Style Latch Block Swing In/Out & S/A Hangers
11-19	129764	AAA FRNT MNT ADAPTER KIT PR	AAA FRNT MNT fits both Kids and Adult Angle Adjustable Footplates
		Ship assembled part #	Use with multiple assemblies
	ASSY-HNG-FP	HANGER/FOOTPLATE ASSY REQUIRED	add with Hanger & Footplate kit

ADULT ANGLE-ADJ FOOTPLATE FRONT MOUNT

[03/2017]

To have complete Footrest ship assembled, choose compatible Hanger + Footplate part numbers and add "ASSY-HNG-FP" to order

INSET FORMULA
0" Inset (Seat Width) = Footrest Width
1" Inset (Seat Width) -2" = Footrest Width
"V" Hanger (Seat Width) -4" = Footrest Width
Offset Hanger Receiver (Seat Width) +2" = Footrest Width

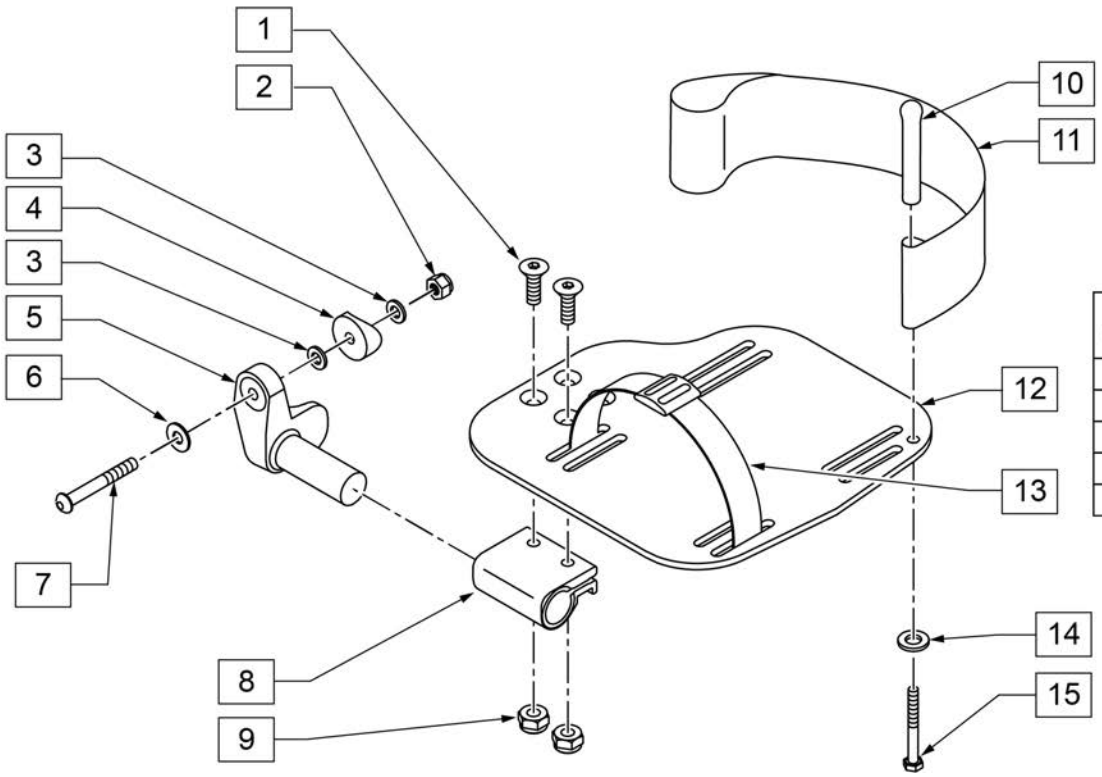

MEASURING GUIDE

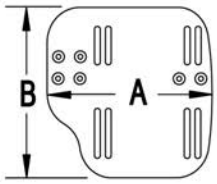

CHAIR WIDTH	"A"	"B"
10"-11"	3 1/2"	7 1/4"
12"-13"	4 1/2"	7 3/4"
14"-15"	5 1/2"	7 3/4"
16"-17"	6 1/2"	7 3/4"
18"-20"	7 1/2"	7 3/4"

Pos.	Item Number	Description	Remarks
1	106978	FHCS 1/4-28 X 7/8 ROHS	
2	106941	NUT AUTOMATION 1/4-28 ROHS	
3	106943	WASHER FLAT AN 1/4 ROHS	
4	561004	1" SADDLE 1/4" HOLE	
5	541000	FOOTREST MOUNTING BRKT 1/2" RAD R	RIGHT
5	541001	FOOTREST MOUNTING BRKT 1/2" RAD L	LEFT
6	106945	WASHER FLAT SAE 1/4 ROHS	
7	106964	BHCS 1/4-28 X 2	
8	550350	3/4" CLAMP ADJ FOOTPLATE	
9	106935	NUT NYLOCK THIN 1/4-28 ROHS	
10	561040	HEEL LOOP PEG	
11	741153	HEEL LOOP 18-20 CMPST/14-15 ANG ADJ	USED W/ 14-15"/16-17" ADULT ANG ADJ FTPLTS
11	741253	HEEL LOOP ADLT ADJ F/PLT 18-20	USED W/ 18 -20" ADULT ANG ADJ FTPLTS
12	500656	ADULT ANGL ADJ F/PLT 10/11	RIGHT
12	500657	ADULT ANGL ADJ F/PLT 10/11	LEFT
12	500658	ADULT ANGL ADJ F/PLT 12/13	RIGHT
12	500659	ADULT ANGL ADJ F/PLT 12/13	LEFT
12	500660	ADULT ANGL ADJ F/PLT 14/15	RIGHT
12	500661	ADULT ANGL ADJ F/PLT 14/15	LEFT
12	500662	ADULT ANGL ADJ F/PLT 16/17	RIGHT
12	500663	ADULT ANGL ADJ F/PLT 16/17	LEFT
12	500664	ADULT ANGL ADJ F/PLT 18-20	RIGHT

Pos.	Item Number	Description	Remarks
12	500665	ADULT ANGL ADJ F/PLT 18-20	LEFT
13	740260	TOE-ANKLE STRAP ADJ ADULT FOOTPLATE	
14	106943	WASHER FLAT AN 1/4 ROHS	
15	106958	HHCS 1/4-20 X 1 ROHS	
1-9,12	820544	FP ADULT ADJ 90D 10/11 R	RIGHT
1-9,12	820554	FP ADULT ADJ 90D 10/11 L	LEFT
1-9,12	820546	FP ADULT ADJ 90D 12/13 R	RIGHT
1-9,12	820556	FP ADULT ADJ 90D 12/13 L	LEFT
1-9,12	820472	FP ADULT ADJ 90D 14/15 R	RIGHT
1-9,12	820473	FP ADULT ADJ 90D 14/15 L	LEFT
1-9,12	820474	FP ADULT ADJ 90D 16/17 R	RIGHT
1-9,12	820475	FP ADULT ADJ 90D 16/17 L	LEFT
1-9,12	820476	FP ADULT ADJ 90D 18-20 R	RIGHT
1-9,12	820477	FP ADULT ADJ 90D 18-20 L	LEFT
1-9,12	921474	ADULT ANGL ADJ 90D 10/11 OMIT H/L	PAIR
1-9,12	921476	ADULT ANGL ADJ 90D 12/13 OMIT H/L	PAIR
1-9,12	921330	ADULT ANGL ADJ 90D 14/15 OMIT H/L	PAIR
1-9,12	921331	ADULT ANGL ADJ 90D 16/17 OMIT H/L	PAIR
1-9,12	921332	ADULT ANGL ADJ 90D 18-20 OMIT H/L	PAIR
1-12,14,15	820540	F/PLT ADULT ADJ 90D 10/11 R W/ HL	RIGHT
1-12,14,15	820550	F/PLT ADULT ADJ 90D 10/11 L W/ HL	LEFT
1-12,14,15	820542	F/PLT ADULT ADJ 90D 12/13 R W/ HL	RIGHT
1-12,14,15	820552	F/PLT ADULT ADJ 90D 12/13 L W/ HL	LEFT
1-12,14,15	820478	F/PLT ADULT ADJ 90D 14/15 R W/ HL	RIGHT
1-12,14,15	820479	F/PLT ADULT ADJ 90D 14/15 L W/ HL	LEFT
1-12,14,15	820480	F/PLT ADULT ADJ 90D 16/17 R W/ HL	RIGHT
1-12,14,15	820481	F/PLT ADULT ADJ 90D 16/17 L W/ HL	LEFT
1-12,14,15	820482	F/PLT ADULT ADJ 90D 18-20 R W/ HL	RIGHT
1-12,14,15	820483	F/PLT ADULT ADJ 90D 18-20 L W/ HL	LEFT
1-12,14,15	921470	F/PLT ADULT ADJ 90D 10/11 W/ HL	PAIR
1-12,14,15	921472	F/PLT ADULT ADJ 90D 12/13 W/ HL	PAIR
1-12,14,15	921333	F/PLT ADULT ADJ 90D 14/15 W/ HL	PAIR
1-12,14,15	921334	F/PLT ADULT ADJ 90D 16/17 W/ HL	PAIR
1-12,14,15	921335	F/PLT ADULT ADJ 90D 18-20 W/ HL	PAIR
		Ship assembled part #	Use with multiple assemblies
	ASSY-HNG-FP	HANGER/FOOTPLATE ASSY REQUIRED	add with Hanger & Footplate kit

FRONT MOUNT ELR (LATCH STUD STYLE) (DISC. 2/6/17) [06/2017]

Note: When retrofitting ELR to a chair with S/A Hangers please order Qty 2 of p/n 107491(Item 25).

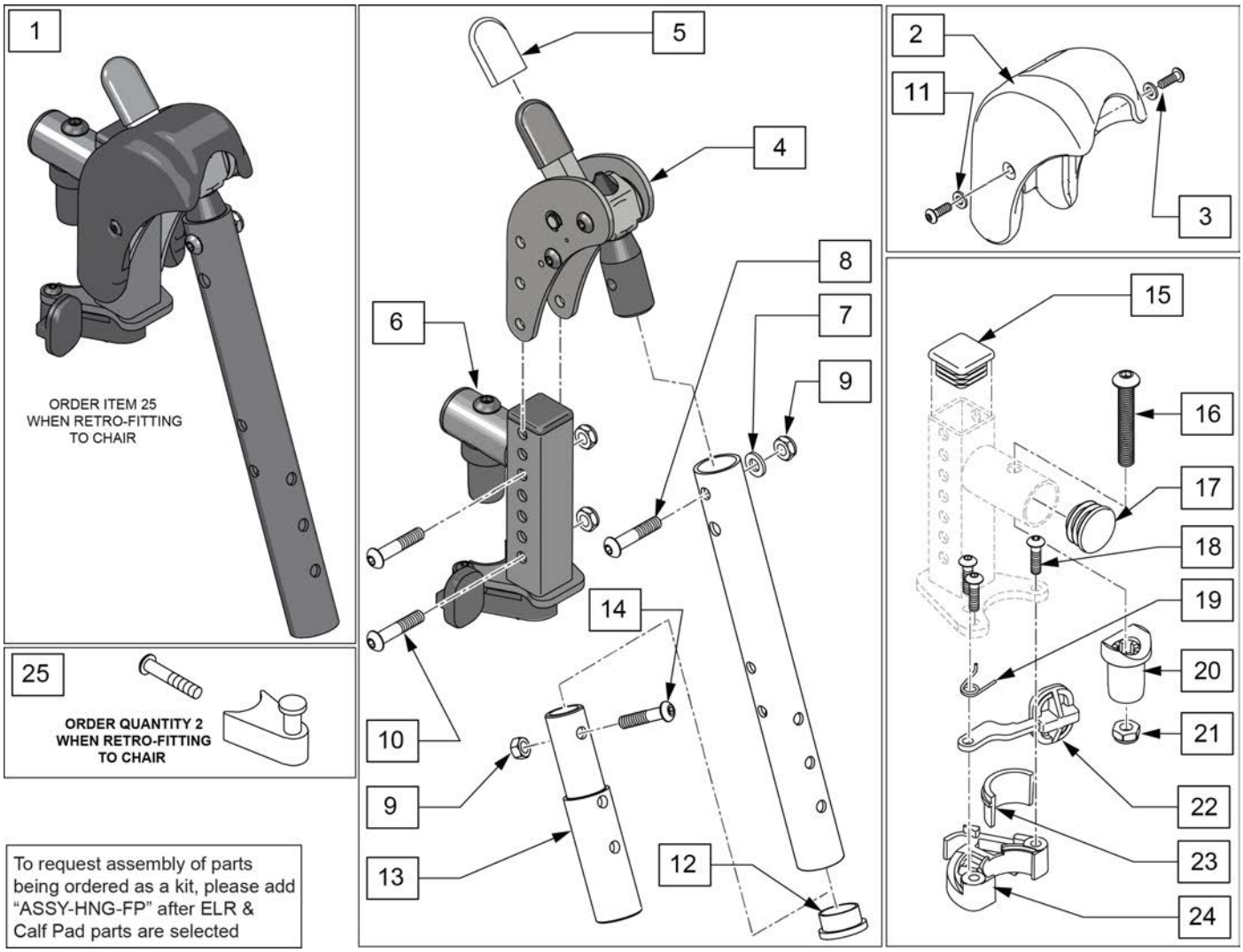

Pos.	Item Number	Description	Remarks
1	129635S	DIRECT MOUNT ELR KIT R	Right-order item 25 when retro-fitting to chair
1	129636S	DIRECT MOUNT ELR KIT L	Left-order item 25 when retro-fitting to chair
1	129634S	DIRECT MOUNT ELR PAIR KIT	Pair-order item 25 when retro-fitting to chair
2,3,25	129640	ELR SHROUD KIT	Kit w/ 2 screws
3	127135	BHCS 8-32 X 1/2 BLK	
4	126992	HEMI ELR SUB ASSM	
5	560501	ALR REL LEVER COVER	
6	127114	HEMI RECEIVER ASSM ELR ALR R	Right
6	127115	HEMI RECEIVER ASSM ELR ALR L	Left
7	104414	WAVE WASHER 6 MM	
8	106961	BHCS 1/4 -28 x 1 1/4 ROHS	
9	106935	1/4-28 NYLOCK NUT THIN BLK ZN	
10	108623	BHCS 1/4-28 x 1-1/2	
11	113282	WASHER FLAT AN #10 ROHS	

Pos.	Item Number	Description	Remarks
12	561002	1" INSERT PLUG .083	
13	500150	2" FOOTREST EXT TUBE	
14	106961	1/4-28 x 1 1/4 BH C/S	
15	010615	SQUARE END CAP CNTR LEG	
17	561062	1" INSERT PLUG .065 RIBS	
18	226057	BHCS 10-24 X .725 PL	
16,17,20,21	119518	PIVOT SADDLE KIT	
23,24	881500	LATCH BLOCK ASSM R	Right
23,24	881501	LATCH BLOCK ASSM L	Left
18,19,22-24	881521	S/A LATCH KIT CASTING RIGHT	Right
18,19,22-24	881522	S/A LATCH KIT CASTING LEFT	Left
25	107491	LATCH STUD KIT	order qty 2 when retro-fitting to chair
		Ship assembled part #	Use with multiple assemblies
	ASSY-HNG-FP	HANGER/FOOTPLATE ASSY REQUESTED	add with Hanger & Footplate kit

90 DEG ELEVATING CALF PAD

[09/2011]

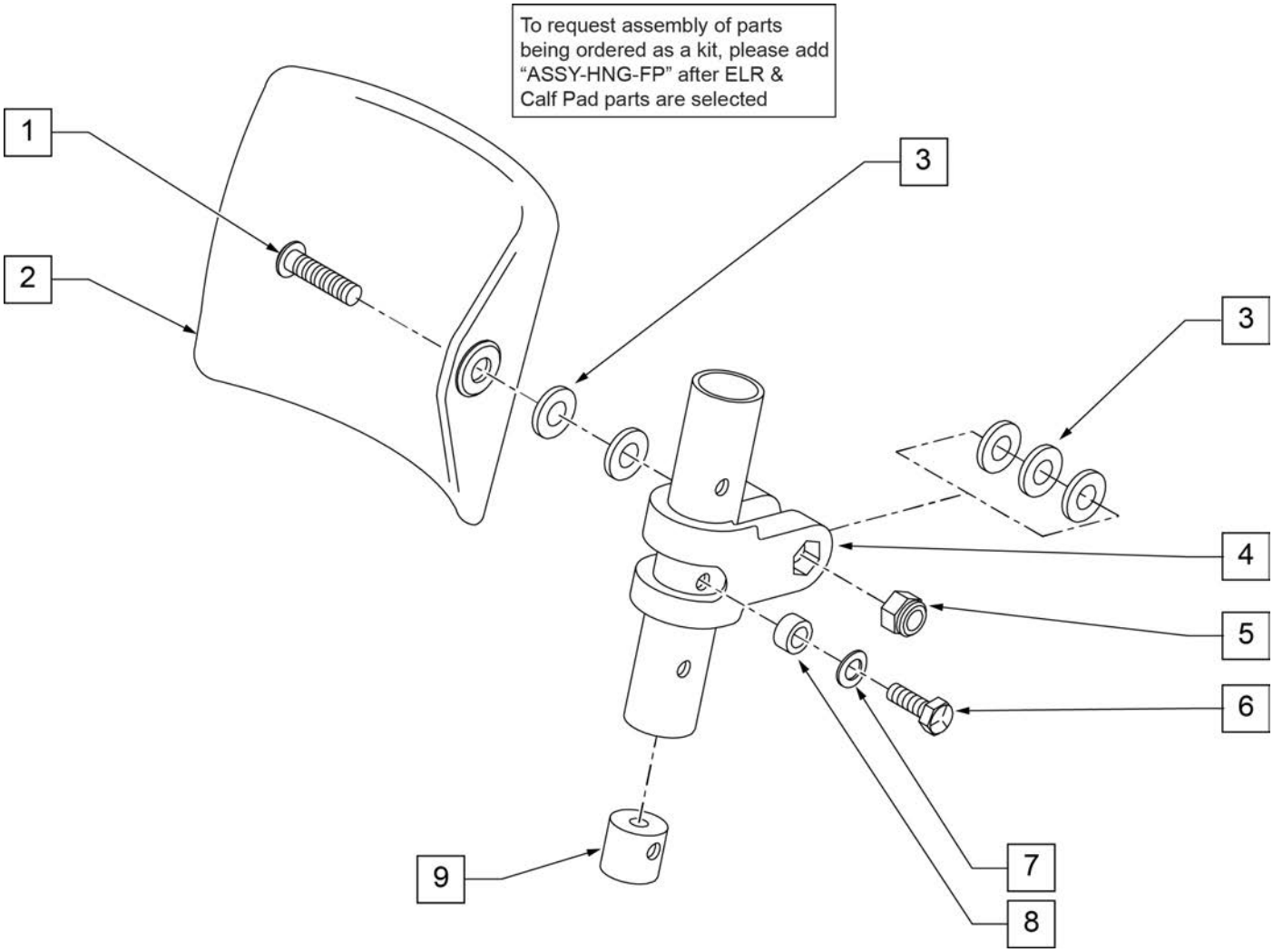

Pos.	Item Number	Description	Remarks
1	226217	5/16-18 x 2" BH C/S BLK	
2	755013	CALF PAD TROUGH STYLE KIDS	
3	561016	1" WASHER 5/16" HOLE	
4	561097	ELR ELEVATING TUBE CLAMP	
5	106937	5/16 -18 NYLOCK NUT THIN	
6	106958	HHCS 1/4-20 X 1 ROHS	
7	262130	6mm WASHER WAVE	
8	483027	1/4 x 1/4 ALUMINUM SPACER	
9	500151	KIDS ALR RETAINING PLUG	
1-9	880533	ELR TROUGH PAD ASSM KIDS	
		Ship assembled part #	Use with multiple assemblies
	ASSY-HNG-FP	HANGER/FOOTPLATE ASSY REQUIRED	add with Hanger & Footplate kit

FRONT MOUNT HANGER EXT

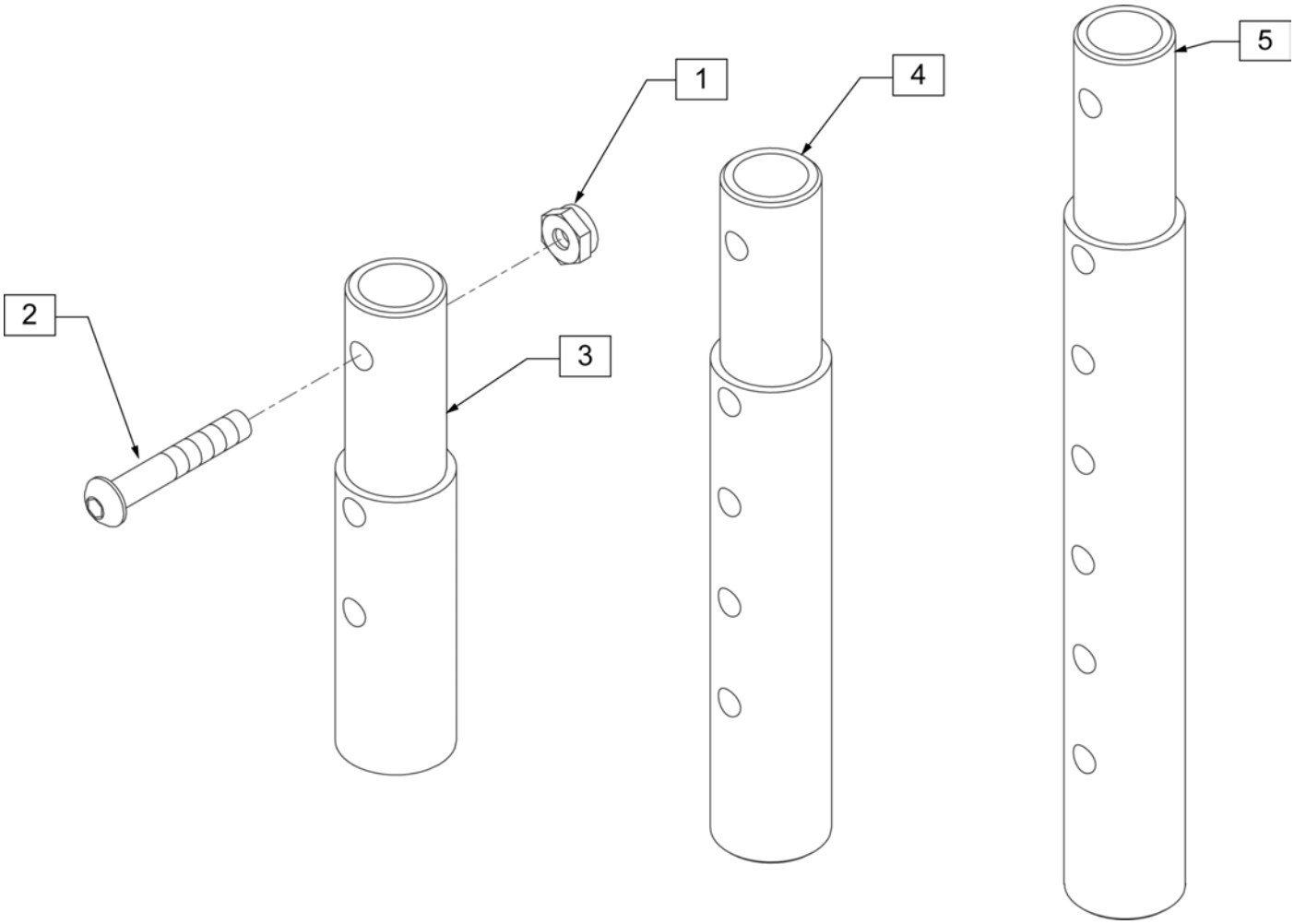

Pos.	Item Number	Description	Remarks
1	106935	NUT NYLOCK THIN 1/4 -28 ROHS	
2	106961	BHCS 1/4 -28 x 1 1/4 ROHS	
1-3	111505	2" FOOTREST EXTENSION TUBE W/ HDWR ASSM	2" EXT (PAIR)
1, 2, 4	111506	4" FOOTREST EXTENSION TUBE W/ HDWR ASSM	4" EXT (PAIR)
1, 2, 5	111507	6" FOOTREST EXTENSION TUBE W/ HDWR ASSM	6" EXT (PAIR)

ADULT ANGLE-ADJ FOOTPLATE FRONT MOUNT

[10/26/2018]

Note: for QX Series or SR45 footplate replacement parts see the ordering guide marked specifically for these two models in the informations panel.

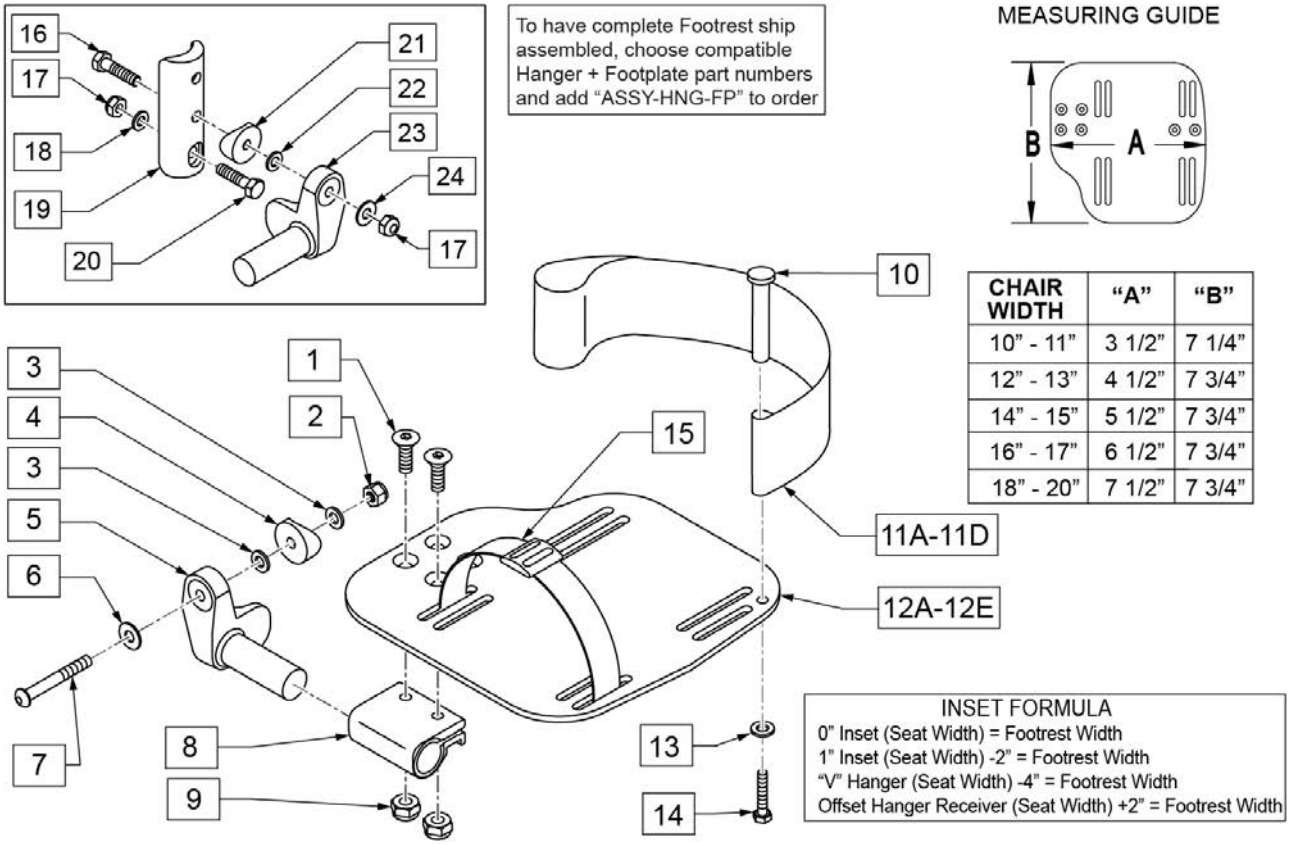

CHAIR WIDTH	"A"	"B"
10" - 11"	3 1/2"	7 1/4"
12" - 13"	4 1/2"	7 3/4"
14" - 15"	5 1/2"	7 3/4"
16" - 17"	6 1/2"	7 3/4"
18" - 20"	7 1/2"	7 3/4"

Pos.	Item Number	Description	Remarks
1	106978	FHCS 1/4-28 X 7/8	
2	106934	NUT NYLOCK 1/4-28	
3	106944	WASHER FLAT THIN AN 1/4	
4	561004	Q2 SADDLE	
5	541000	FTRST MOUNTING BRKT 1/2" RAD R	Right
5	541001	FTRST MOUNTING BRKT 1/2" RAD L	Left
6	106945	WASHER FLAT SAE 1/4 ROHS	
7	106964	BHCS 1/4-28 X 2	
8	550350	3/4 CLMP ADJ FT PLT	
9	106935	NUT NYLOCK THIN 1/4-28 ROHS	
10	561040	HEEL LOOP PEG	
11A	104380-001	ADJ FOOTREST STRAP 14W	Used on 10"-13" wide
11B	104380-002	ADJ FOOTREST STRAP 15-16W	Used on 14"-15" wide
11C	104380-003	ADJ FOOTREST STRAP 17-18W	Used on 16"-17" wide
11D	104380-004	ADJ FOOTREST STRAP 19-20W	Used on 18"-20" wide
12A	500656	ADULT ANGL ADJ F/PLT 10/11	Right; 10"-11" wide
12A	500657	ADULT ANGL ADJ F/PLT 10/11	Left; 10"-11" wide

Pos.	Item Number	Description	Remarks
12B	500658	ADULT ANGL ADJ F/PLT 12/13	Right; 12"-13" wide
12B	500659	ADULT ANGL ADJ F/PLT 12/13	Left; 12"-13" wide
12C	500660	ADULT ANGL ADJ F/PLT 14/15	Right; 14"-15" wide
12C	500661	ADULT ANGL ADJ F/PLT 14/15	Left; 14"-15" wide
12D	500662	ADULT ANGL ADJ F/PLT 16/17	Right; 16"-17" wide
12D	500663	ADULT ANGL ADJ F/PLT 16/17	Left; 16"-17" wide
12E	500664	ADULT ANGL ADJ F/PLT 18-20	Right; 18"-22" wide
12E	500665	ADULT ANGL ADJ F/PLT 18-20	Left; 18"-22" wide
13	107383	WASHER FLAT M6 ROHS	
14	102268-001	HHCS M6 X 1 X 25	
15	740260	TOE-ANKLE STRAP ADJ ADULT FOOTPLATE	
16	102268-001	HHCS M6 X 1 X 25	
17	132626	NUT AUTOMATION M6 X 1	
18	107383	WASHER FLAT M6 ROHS	
20	118198	HHCS M6X1X40 PART NP	
21	561004	Q2 SADDLE	
22	106943	WASHER FLAT AN 1/4 ROHS	
24	106945	WASHER FLAT SAE 1/4 ROHS	
16-24	129764	AAA FRNT MNT ADAPTER KIT PR	Pair; fits both Kids & Adult Angle Adj Footplates
1,8-10,11A,12A,13,14	129765	AAA F/PLT KIT 10-11 RT	Right; used w/ 129764 on Plunger-Style Swing In/Out Hangers
1,8-10,11A,12A,13,14	129766	AAA F/PLT KIT 10-11 LFT	Left; used w/ 129764 on Plunger-Style Swing In/Out Hangers
1,8-10,11A,12B,13,14	129767	AAA F/PLT KIT 12-13 RT	Right; used w/ 129764 on Plunger-Style Swing In/Out Hangers
1,8-10,11A,12B,13,14	129768	AAA F/PLT KIT 12-13 LFT	Left; used w/ 129764 on Plunger-Style Swing In/Out Hangers
1,8-10,11B,12C,13,14	129769	AAA F/PLT KIT 14-15 RT	Right; used w/ 129764 on Plunger-Style Swing In/Out Hangers
1,8-10,11B,12C,13,14	129770	AAA F/PLT KIT 14-15 LFT	Left; used w/ 129764 on Plunger-Style Swing In/Out Hangers
1,8-10,11C,12D,13,14	129771	AAA F/PLT KIT 16-17 RT	Right; used w/ 129764 on Plunger-Style Swing In/Out Hangers
1,8-10,11C,12D,13,14	129772	AAA F/PLT KIT 16-17 LFT	Left; used w/ 129764 on Plunger-Style Swing In/Out Hangers
1,8-10,11D,12E,13,14	129773	AAA F/PLT KIT 18-20 RT	Right; used w/ 129764 on Plunger-Style Swing In/Out Hangers
1,8-10,11D,12E,13,14	129774	AAA F/PLT KIT 18-20 LFT	Left; used w/ 129764 on Plunger-Style Swing In/Out Hangers
1-10,11A,12B	111514	AAA FTPLT 90D 12/13 " R	Right; used w/ Old-Style Latch Block Swing In/Out & S/A Hngrs
1-10,11A,12B	111515	AAA FTPLT 90D 12/13" L	Left; used w/ Old-Style Latch Block Swing IO & S/A Hngrs
1-10,11B,12C	111516	AAA FTPLT 90D 14/15" R	Right; used w/ Old-Style Latch Block Swing In/Out & S/A Hngrs
1-10,11B,12C	111517	AAA FTPLT 90D 14/15" L	Left; used w/ Old-Style Latch Block Swing IO & S/A Hngrs
1-10,11C,12D	111518	AAA FTPLT 90D 16/17" R	Right; used w/ Old-Style Latch Block Swing In/Out & S/A Hngrs
1-10,11C,12D	111519	AAA FTPLT 90D 16/17" L	Left; used w/ Old-Style Latch Block Swing IO & S/A Hngrs
1-10,11D,12E	111520	AAA FTPLT 90D 18/20" R	Right; used w/ Old-Style Latch Block Swing In/Out & S/A Hngrs
1-10,11D,12E	111521	AAA FTPLT 90D 18/20" L	Left; used w/ Old-Style Latch Block Swing IO & S/A Hngrs
		Ship assembled part #	Use with multiple assemblies
	ASSY-HNG-FP	HANGER/FOOTPLATE ASSY REQUIRED	add with Hanger & Footplate kit

Note: For installation instructions please see the informations section to the right of this parts page.

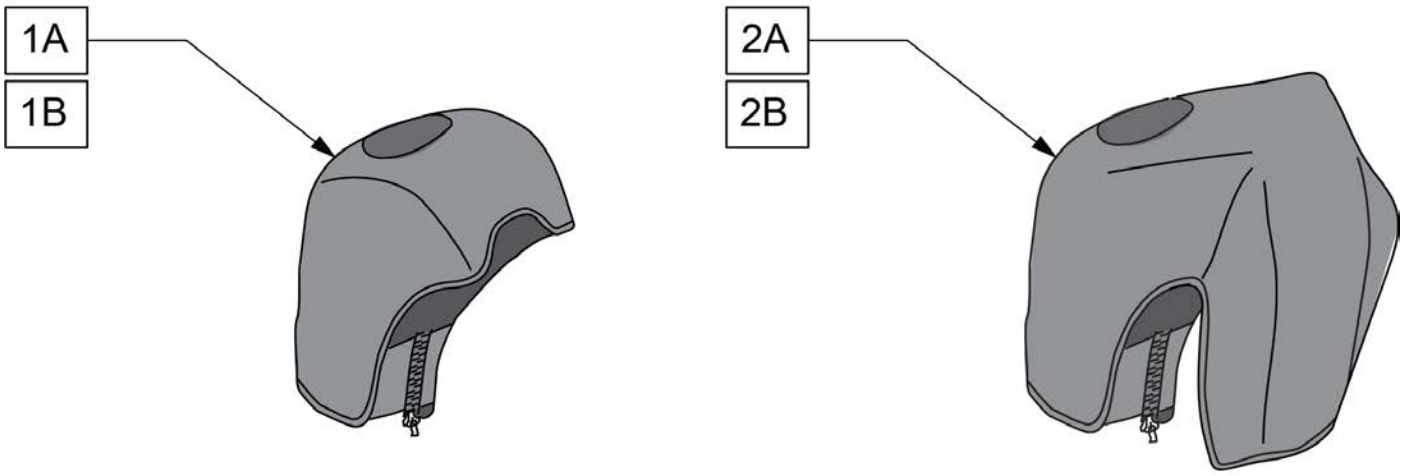

Pos.	Item Number	Description	Remarks
1A	163881	ELR NEOPRENE COVER PR	Pair
1B	163882	ELR GEL COVER PR	Pair
2A	163883	ALR NEOPRENE COVER PR	Pair
2B	163884	ALR GEL COVER PR	Pair

EXTENSION MOUNT ELR RETROFIT (LATCH STUD STYLE) (DISC. 2/6/17)

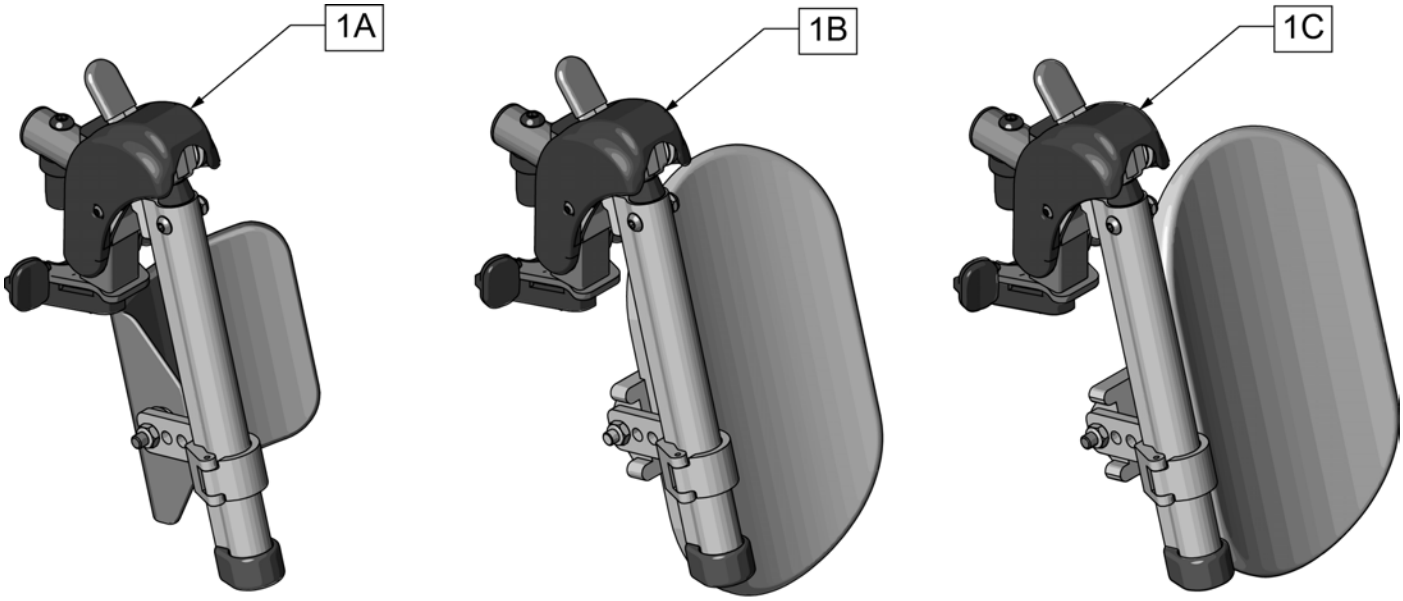

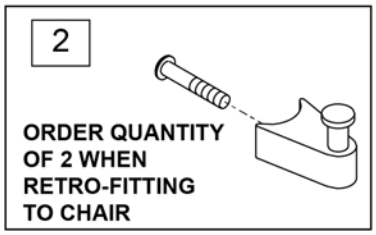

Pos.	Item Number	Description	Remarks
1A	131774S	HEMI ELR HNGR ASM 14-15 W/PAD	
1B	131775S	HEMI ELR HNGR ASM 16-17 W/PAD	
1C	131776S	HEMI ELR HNGR ASM 18-20 W/PAD	
2	107491	LATCH STUD KIT	order qty 2 when retro-fitting to chair
		Ship assembled part #	Use with multiple assemblies
	ASSY-HNG-FP	HANGER/FOOTPLATE ASSY REQUIRED	add with Hanger & Footplate kit

EXTENSION MOUNT ELR REPLACEMENT PARTS (LATCH STUD STYLE) (DISC. 2/6/17) [06/2017]

Note: When retrofitting existing chair with S/A Legrests please order Qty 2 of p/n 107491.(Item 26)

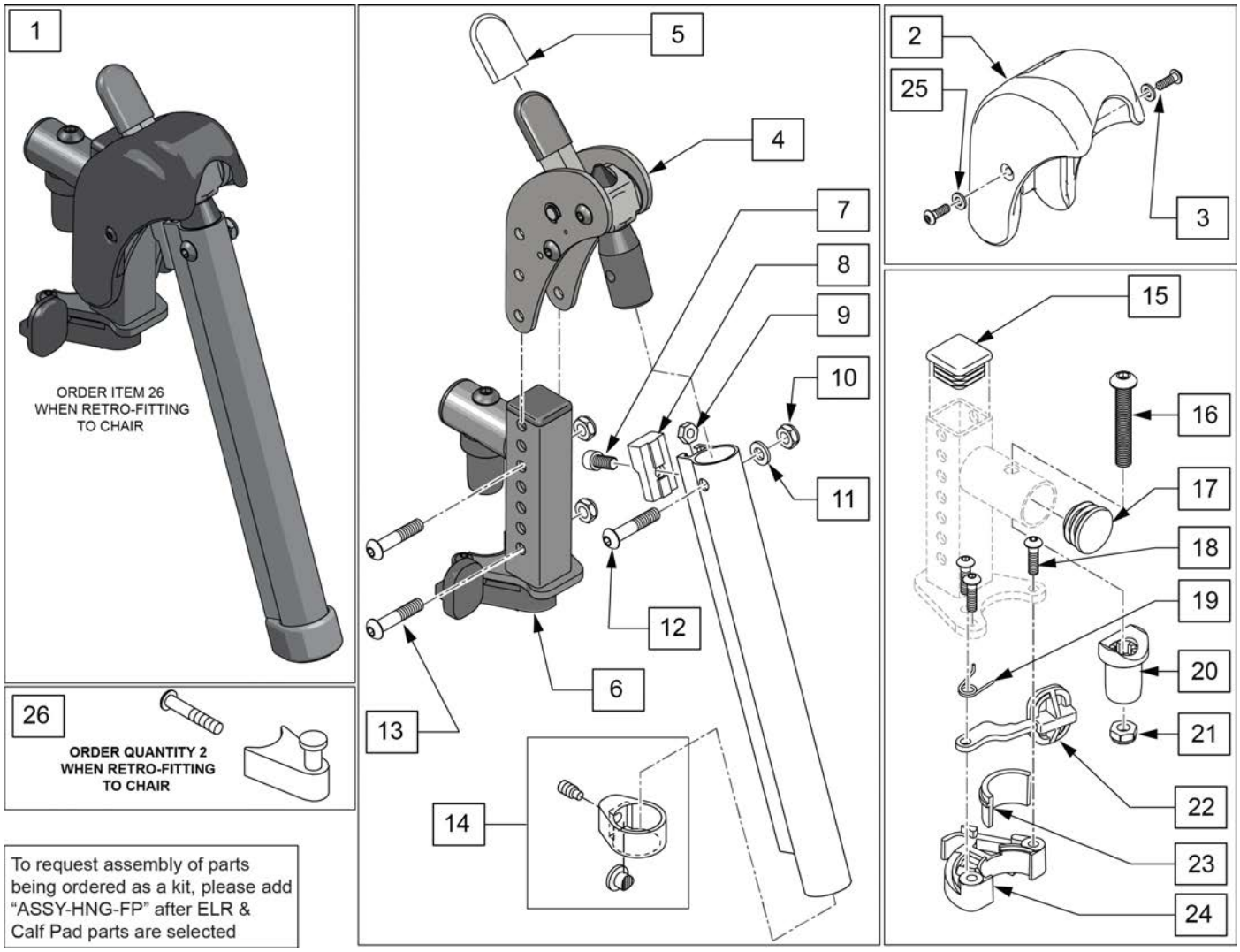

Pos.	Item Number	Description	Remarks
1	129638S	EXTENSION MOUNT ELR KIT R	Right-order item 26 when retro-fitting to chair
1	129639S	EXTENSION MOUNT ELR KIT L	Left-order item 26 when retro-fitting to chair
1	129637S	EXTENSION MOUNT ELR PAIR KIT	Pair-order item 26 when retro-fitting to chair
2,3,25	129640	ELR SHROUD KIT	Kit w/ 2 screws
3	127135	BHCS 8-32 X 1/2 BLK	
4	126992	HEMI ELR SUB ASSM	
5	560501	ALR REL LEVER COVER	
6	127114	HEMI RECEIVER ASSM ELR ALR R	Right
6	127115	HEMI RECEIVER ASSM ELR ALR L	Left
7	107350	SHCS 1/4-28 x 1/2	
8	127129	ANGLE STOP ELR	
9	107249	NUT HEX THIN 1/4-28	
10	106935	1/4-28 NYLOCK NUT THIN BLK ZN	
11	104414	WAVE WASHER 6 MM	

Pos.	Item Number	Description	Remarks
12	106961	BHCS 1/4 -28 x 1 1/4 ROHS	
13	108623	BHCS 1/4-28 x 1-1/2	
14	119495	EXTENSION CLAMP KIT	
15	010615	SQUARE END CAP CNTR LEG	
16	226217	5/16-18 X 2" BH C/S BLK	
17	561062	1" INSERT PLUG .065 RIBS	
18	226057	BHCS 10-24 X .725 PL	
20	561197	PLASTIC PIVOT SADDLE	
21	202102	5/16-18 NYLOCK NUT THIN	
23,24	881500	LATCH BLOCK ASSM R	Right
23,24	881501	LATCH BLOCK ASSM L	Left
25	113282	WASHER FLAT AN #10 ROHS	
18,19,22-24	881521	S/A LATCH KIT CASTING RIGHT	Right
18,19,22-24	881522	S/A LATCH KIT CASTING LEFT	Left
26	107491	LATCH STUD KIT	order qty 2 when retro-fitting to chair
		Ship assembled part #	Use with multiple assemblies
	ASSY-HNG-FP	HANGER/FOOTPLATE ASSY REQUIRED	add with Hanger & Footplate kit

ELR & ALR CALF PAD 14 -15"

[07/2017]

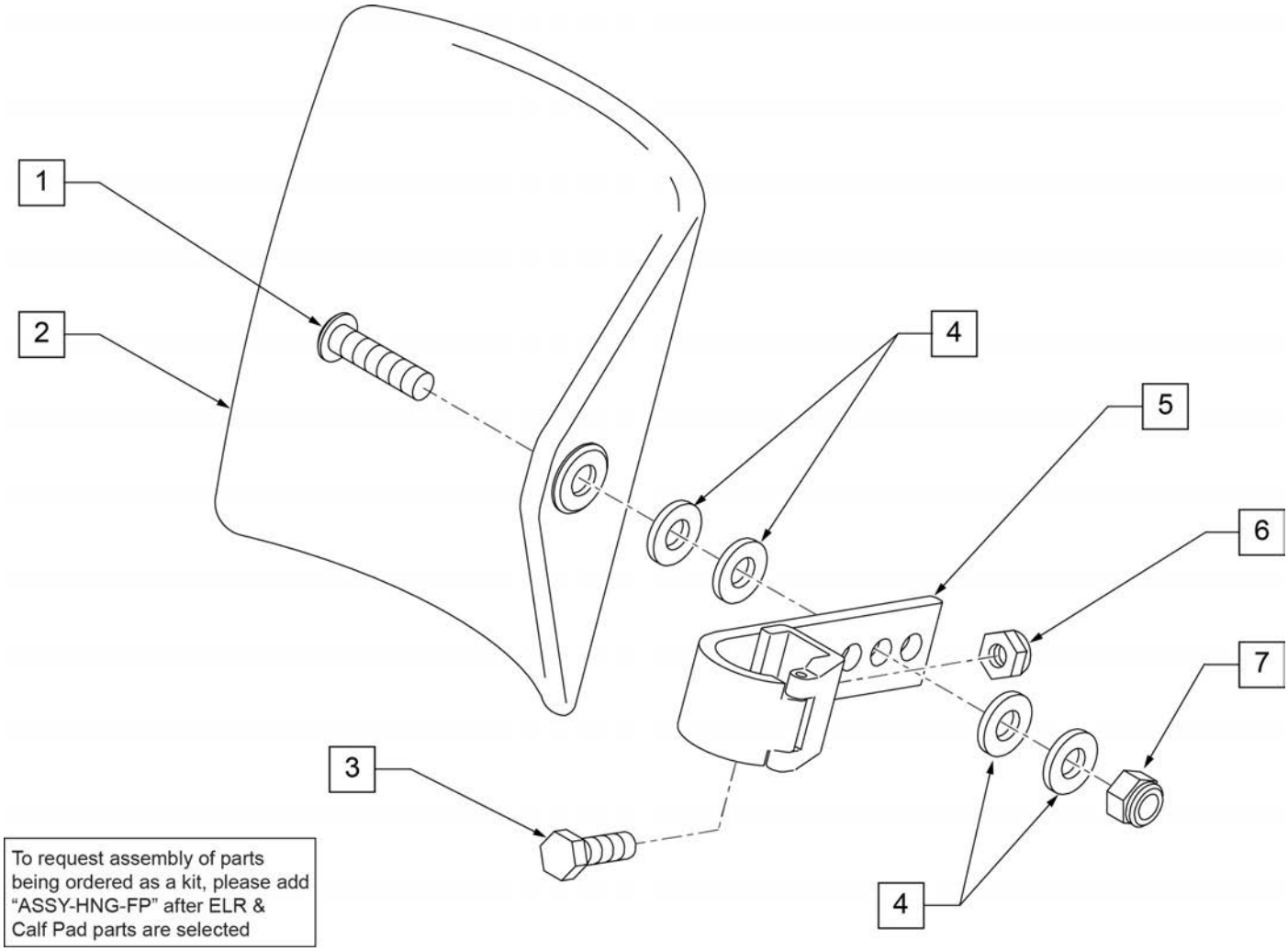

Pos.	Item Number	Description	Remarks
1	106980	BHCS 5/16-18 X 1-1/4 ROHS	
2	755014	CALF PAD TROUGH STYLE 14"/16"	
3	221097	1/4-28 X 5/8 HEX C/S BZ	
4	561016	1" WASHER 5/16" HOLE	
5	881413	CALF PAD BRACKET ASSEMBLY	
6	106934	NUT NYLOCK 1/4-28 ROHS	
7	106937	NUT NYLOCK THIN 5/16-18	
1-7	881414	CALF PAD J-HOOK 14"-15" ASSEMBLY	
		Ship assembled part #	Use with multiple assemblies
	ASSY-HNG-FP	HANGER/FOOTPLATE ASSY REQUIRED	add with Hanger & Footplate kit

ELR & ALR CALF PAD 16-20"

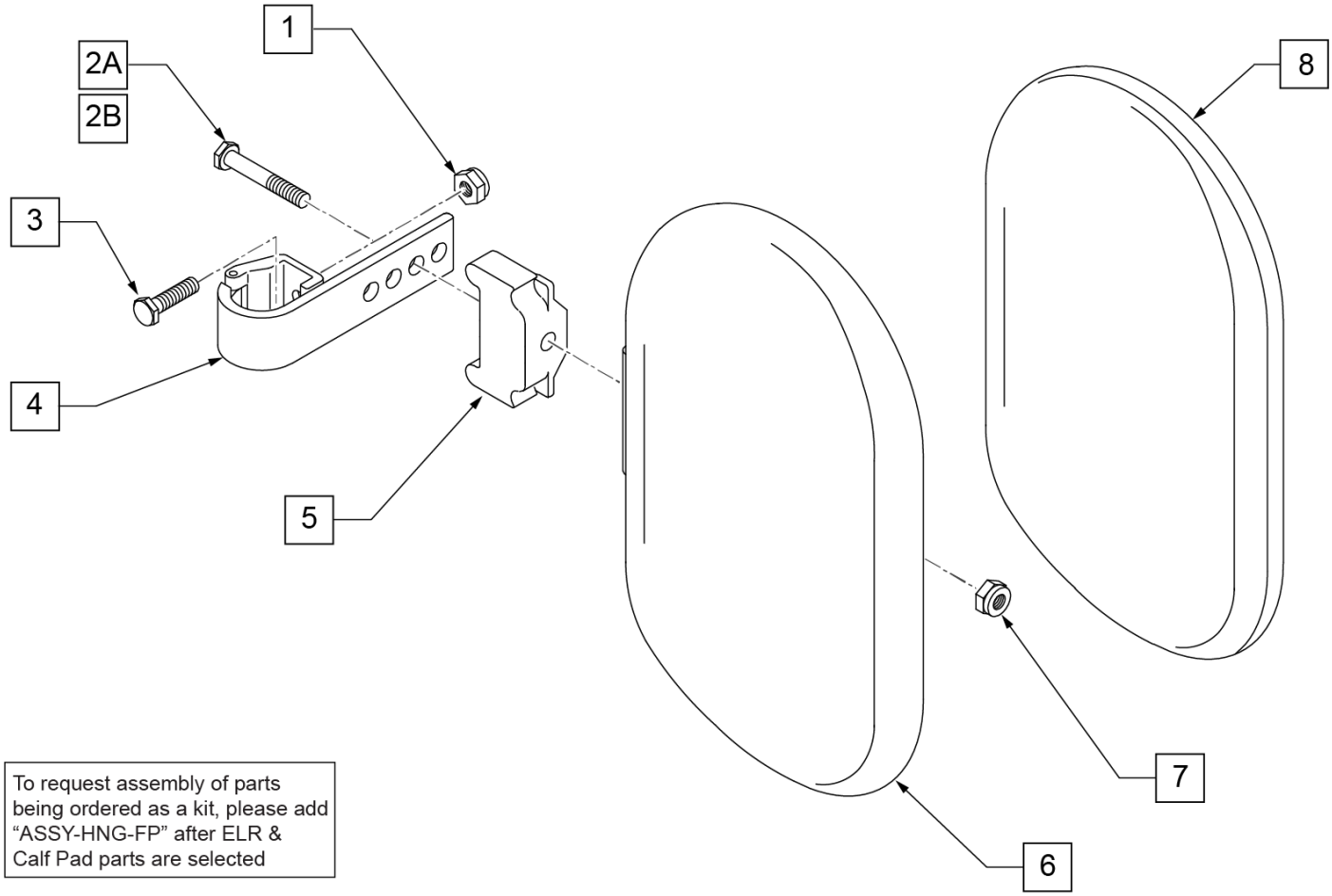

To request assembly of parts being ordered as a kit, please add "ASSY-HNG-FP" after ELR & Calf Pad parts are selected

Pos.	Item Number	Description	Remarks
1	106934	NUT NYLOCK 1/4-28 ROHS	
2A	107018	HHCS 5/16-18 X 2-1/2 ROHS	16"-17" wide only
2B	107019	HHCS 5/16-18 X 3-1/2 ROHS	18"-20" wide only
3	107013	HHCS 1/4-28 X 5/8 ROHS	
4	881413	CALF PAD BRACKET ASSEMBLY	
5	560199	ELR CALF HINGE SPACER	18"-20" wide only
6	560108	CALF PAD MOLDED 16"-20"	
7	106936	NUT NYLOCK 5/16-18 ROHS	
8	751045	CALF PAD COVER	
1,2A,3,4,6-8	881416	CALF MOLDED 16"-17" ASSEMBLY	
1,2B,3-7,8	881412	CALF PAD MOLDED 18"-20" ASSEMBLY	
		Ship assembled part #	Use with multiple assemblies
	ASSY-HNG-FP	HANGER/FOOTPLATE ASSY REQUIRED	add with Hanger & Footplate kit

Note: Footplate Assemblies are set to footrest width; please see "Footplate Formula" table for seat width conversion.

Note: If using Short Ext Tube & Hemi Hanger with Adult Angle Adjustable Footplate use 1D (straight) .

Note: V Style Hangers are not available on Swing Away Style chairs effective 7/14/14; see the "Prior To" ordering guide for V Style footplate assemblies.

Note: for QX Series or SR45 footplate replacement parts see the ordering guide marked specifically for these two models in the informations panel.

Note: if chair has High Mount Ext Tubes or if switching to High Mount Ext Tubes, see AAA Footplate w/ High Mount Extension Ordering Guide.

[02/19/2020]

To have complete Footrest ship assembled, choose compatible Hanger + Footplate part numbers and add "ASSY-HNG-FP" to order

ADD INSET FORMULA
0" Inset (Seat Width) = Footrest Width
1" Inset (Seat Width) -2" = Footrest Width
2" Inset (Seat Width) -4" = Footrest Width
"V" Hanger (Seat Width) -4" = Footrest Width
Offset Hanger Receiver (Seat Width) +2" = Footrest Width
Flared Frame (Seat Width) = 2" = Footrest Width

MEASURING GUIDE

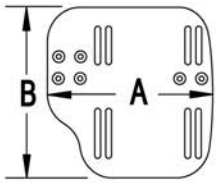

CHAIR WIDTH	"A"	"B"
10" - 11"	3 1/2"	7 1/4"
12" - 13"	4 1/2"	7 3/4"
14" - 15"	5 1/2"	7 3/4"
16" - 17"	6 1/2"	7 3/4"
18" - 20"	7 1/2"	7 3/4"

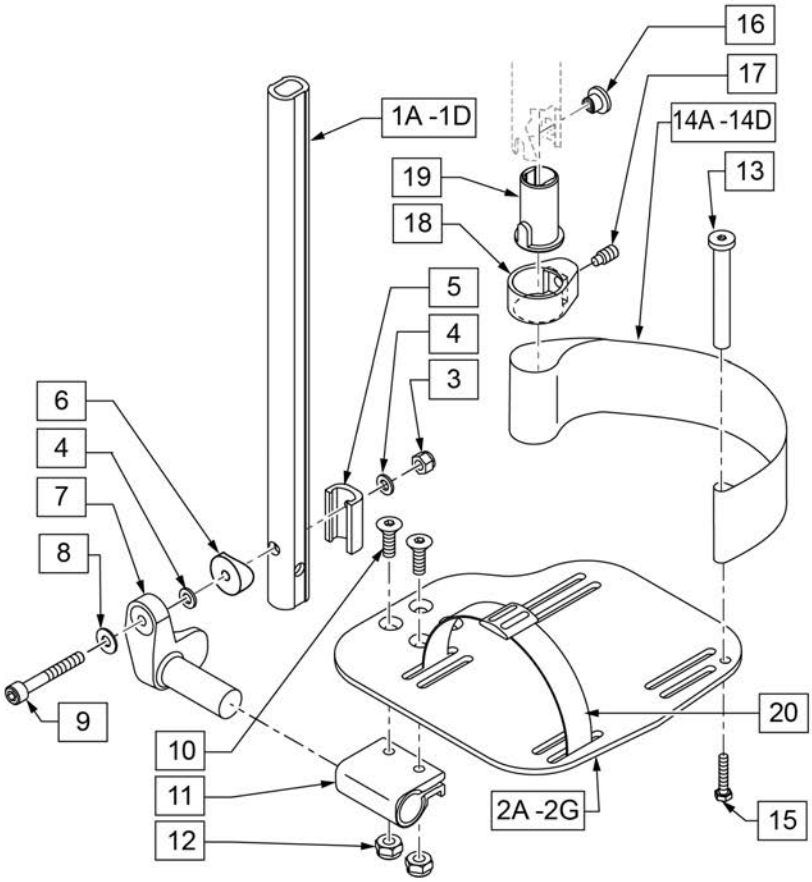

21 EXT MNT HARDWARE 1 SIDE

ITEM #	ILLUSTRATION	DESCRIPTION	QTY
3		NUT AUTOMATION M6 X 1.0 ROHS	1
4		WASHER FLAT THIN AN 1/4	2
5		HANGER EXTENSION SADDLE	1
6		3/4" SADDLE 1" OD	1
8		WASHER FLAT SAE 1/4 ROHS	1
9		SHCS M6X1X45 12MM PART THD	1

Pos.	Item Number	Description	Remarks
1A,3-6,8,9	120670	SHT STRT EXT AAA HDWR	
1B,3-6,8,9	120671	MED STRT EXT AAA HDWR	
1C,3-6,8,9	120672	LNG STRT EXT AAA HDWR	
1D	128079	TUBE FTRST EXT STRGHT SHT HEMI	Use for Hemi Ext Tube option
2A	500656	ADULT ANG ADJ F/PLT 10/11" R	RIGHT 10-11" Footrest Width
2A	500657	ADULT ANG ADJ F/PLT 10/11" L	LEFT 10-11" Footrest Width
2B	500658	ADULT ANG ADJ F/PLT 12/13" R	RIGHT 12-13" Footrest Width
2B	500659	ADULT ANG ADJ F/PLT 12/13" L	LEFT 12-13" Footrest Width
2C	500660	ADLT ANGL ADJ F/PLT 14/15	RIGHT 14-15" Footrest Width
2C	500661	ADLT ANGL ADJ F/PLT 14/15	LEFT 14-15" Footrest Width
2D	500662	ADLT ANGL ADJ F/PLT 16/17	RIGHT 16-17" Footrest Width
2D	500663	ADLT ANGL ADJ F/PLT 16/17	LEFT 16-17" Footrest Width
2E	500664	ADLT ANGL ADJ F/PLT 18-20	RIGHT 18-22" Footrest Width
2E	500665	ADLT ANGL ADJ F/PLT 18-20	LEFT 18-22" Footrest Width
3	132626	NUT AUTOMATION M6 X 1.0	
4	106944	WASHER FLAT THIN AN 1/4 ROHS	
5	107199	HANGER EXTENSION SADDLE	
6	561055	3/4" SADDLE 1" OD	
7	541002	FTRST MOUNTING BRKT-3/8 RAD R	RIGHT

Pos.	Item Number	Description	Remarks
7	541003	FTRST MOUNTING BRKT-3/8 RAD L	LEFT
8	106945	WASHER FLAT SAE 1/4 ROHS	
9	104399	SHCS M6X1X45 12 MM PART THD	
10	106978	FHCS 1/4-28 X 7/8 ROHS	
11	550350	3/4" CLMP ADJ FT PLT	
12	106935	NUT NYLOCK THIN 1/4-28 ROHS	
13	104328	POST HEEL LOOP	
14A	104380-001	ADJUSTABLE FOOT REST STRAP	12 - 14" WIDE
14B	104380-002	ADJUSTABLE FOOT REST STRAP	15 - 16" WIDE
14C	104380-003	ADJUSTABLE FOOT REST STRAP	17 - 18" WIDE
14D	104380-004	ADJUSTABLE FOOT REST STRAP	19 - 20" WIDE
15	102268-001	HHCS M6 X 1 X 25	
16-19	107485	FOOTREST CLAMP ASSM	
20	740260	TOE-ANKLE STRAP ADJ ADULT FOOTPLATE	
21	120659	EXT MNT HARDWARE 1 SIDE	
>>>>		60,70,80 STD HANGERS - RIGHT	
1A,2B,3-14A,15	111534	AAA STRT SHT EXT ASM 12-13" W R	Right- 12-13" W- SHORT
1A,2C,3-14B,15	107928	AAA STRT SHT EXT ASM 14-15" W R	Right- 14-15" W- SHORT
1A,2D,3-14C,15	107930	AAA STRT SHT EXT ASM 16-17" W R	Right- 16-17" W- SHORT
1A,2E,3-14D,15	107932	AAA STRT SHT EXT ASM 18-22" W R	Right- 18-22" W- SHORT
>>>>		60,70,80 STD HANGERS - LEFT	
1A,2B,3-14A,15	111535	AAA STRT SHT EXT ASM 12-13" W L	Left- 12-13" W- SHORT
1A,2C,3-14B,15	107935	AAA STRT SHT EXT ASM 14" W L	Left- 14-15" W- SHORT
1A,2D,3-14C,15	107937	AAA STRT SHT EXT ASM 16" W L	Left- 16-17" W- SHORT
1A,2E,3-14D,15	107939	AAA STRT SHT EXT ASM 18" W L	Left- 18-22" W- SHORT
>>>>		60,70,80 & 60,70 HEMI HANGERS - RIGHT	
1B,2B,3-14A,15	111536	AAA STRT MED EXT ASM 12-13" W R	Right- 12-13" W- MED
1B,2C,3-14B,15	107942	AAA STRT MED EXT ASM 14-15" W R	Right- 14-15" W- MED
1B,2D,3-14C,15	107944	AAA STRT MED EXT ASM 16-17" W R	Right- 16-17" W- MED
1B,2E,3-14D,15	107946	AAA STRT MED EXT ASM 18-22" W R	Right- 18-22" W- MED
>>>>		60,70,80 & 60,70 HEMI HANGERS - LEFT	
1B,2B,3-14A,15	111537	AAA STRT MED EXT ASM 12-13" W L	Left- 12-13" W- MED
1B,2C,3-14B,15	107949	AAA STRT MED EXT ASM 14" W L	Left- 14-15" W- MED
1B,2D,3-14C,15	107951	AAA STRT MED EXT ASM 16" W L	Left- 16-17" W- MED
1B,2E,3-14D,15	107953	AAA STRT MED EXT ASM 18" W L	Left- 18-22" W- MED
>>>>		60,70,80 & 60,70 HEMI HANGERS - RIGHT	
1C,2B,3-14A,15	111538	AAA STRT LNG EXT ASM 12-13" W R	Right- 12-13" W- LONG
1C,2C,3-14B,15	107956	AAA STRT LNG EXT ASM 14 -15" W R	Right- 14-15" W- LONG
1C,2D,3-14C,15	107958	AAA STRT LNG EXT ASM 16 -17" W R	Right- 16-17" W- LONG
1C,2E,3-14D,15	107960	AAA STRT LNG EXT ASM 18 -22" W R	Right- 18-22" W- LONG
>>>>		60,70,80 & 60,70 HEMI HANGERS - LEFT	
1C,2B,3-14A,15	111539	AAA STRT LNG EXT ASM 12-13" W L	Left- 12-13" W- LONG
1C,2C,3-14B,15	107963	AAA STRT LNG EXT ASM 14W L	Left- 14-15" W- LONG
1C,2D,3-14C,15	107965	AAA STRT LNG EXT ASM 16W L	Left- 16-17" W- LONG
1C,2E,3-14D,15	107968	AAA STRT LNG EXT ASM 18W L	Left- 18-22" W- LONG
>>>>		60&70 HEMI HANGERS - SHORT EXT - RIGHT	
1D,2B,3-14A,15	129756	AAA FOOT KIT SHT HNGR 12W R	Right- 12-13" W- SHORT; add Ext behind the Hemi
1D,2C,3-14B,15	129758	AAA FOOT KIT SHT HNGR 14W R	Right- 14-15" W- SHORT; add Ext behind the Hemi
1D,2D,3-14C,15	129760	AAA FOOT KIT SHT HNGR 16W R	Right- 16-17" W- SHORT; add Ext behind the Hemi
1D,2E,3-14D,15	129762	AAA FOOT KIT SHT HNGR 18W R	Right- 18-22" W- SHORT; add Ext behind the Hemi
>>>>		60&70 HEMI HANGERS - SHORT EXT -LEFT	
1D,2B,3-14A,15	129757	AAA FOOT KIT SHT HNGR 12W L	Left- 12-13" W-SHORT; add Ext behind the Hemi
1D,2C,3-14B,15	129759	AAA FOOT KIT SHT HNGR 14W L	Left- 14-15" W- SHORT; add Ext behind the Hemi
1D,2D,3-14C,15	129761	AAA FOOT KIT SHT HNGR 16W L	Left- 16-17" W- SHORT; add Ext behind the Hemi
1D,2E,3-14D,15	129763	AAA FOOT KIT SHT HNGR 18W L	Left- 18-22" W- SHORT; add Ext behind the Hemi
		Ship assembled part #	Use with multiple assemblies

Pos.	Item Number	Description	Remarks
	ASSY-HNG-FP	HANGER/FOOTPLATE ASSY REQUIRED	add with Hanger & Footplate kit

ELR/ALR ALUMINUM FOOTPLATE

(02/11/2020)

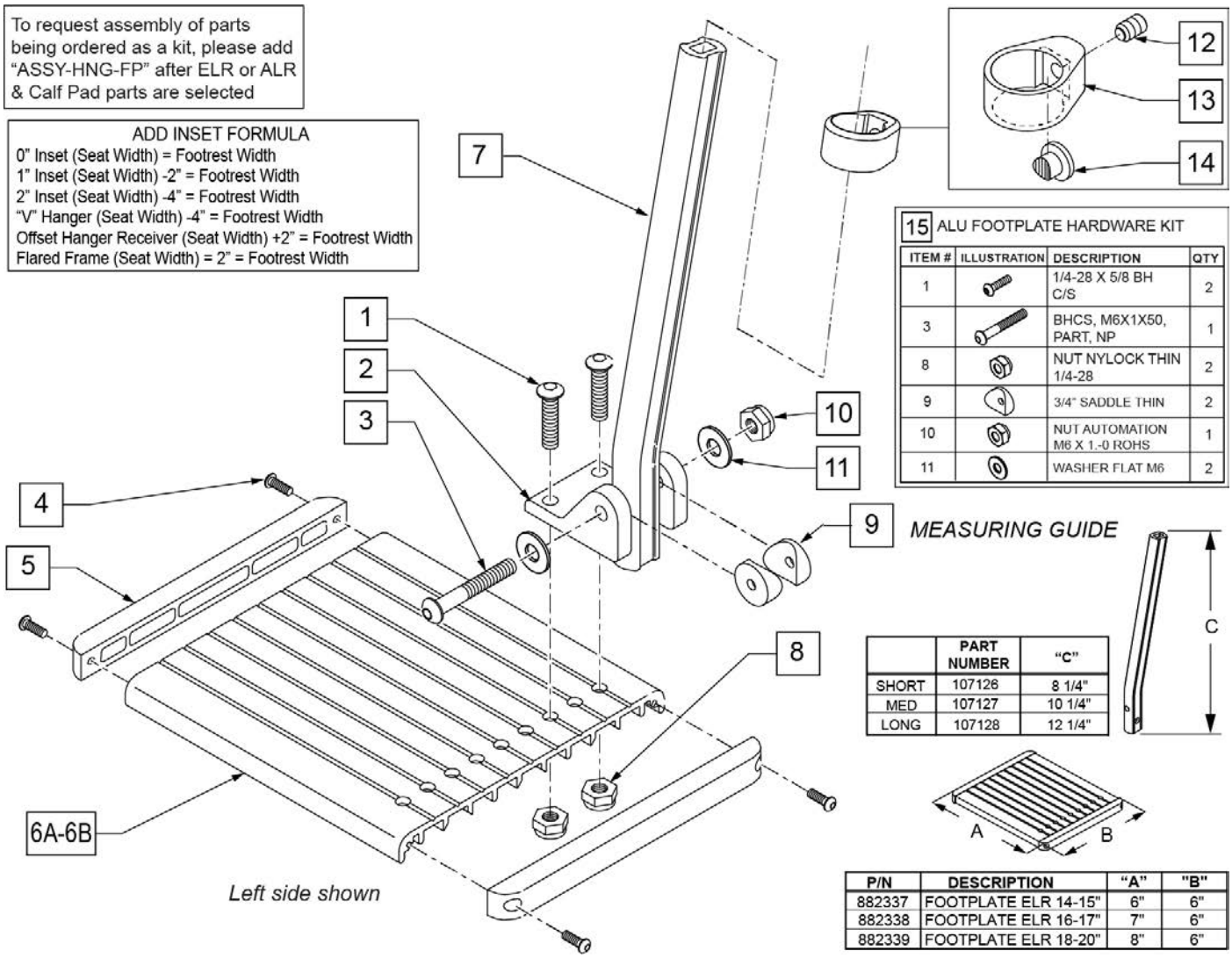

Pos.	Item Number	Description	Remarks
1	226090	1/4-28 x 5/8 BH C/S	
2	118093	BRACKET FOOTPLATE ALUM	
3	102262-008	BHCS M6 X 1 X 50 INORGANIC	
4	281043	#4 x 5/8 PAN PHIL S/TAP	
5	560101	END CAPS FOOTREST	
7	107126	SHORT BENT	
7	107127	MED BENT	
7	107128	LONG BENT	
7	128078	TUBE FOOTREST EXT SHT HEMI	Use for Hemi Extension option
8	106935	1/4-28 NYLOCK NUT THIN	
9	561003	3/4" SADDLE THIN	
10	132626	NUT AUTOMATION M6 X 1.0	
11	107383	WASHER FLAT M6 ROHS	
4,5,6A	882337	ELR FOOTPLATE ASSEMBLY 14 -15"	
4,5,6B	882338	ELR FOOTPLATE ASSEMBLY 16 -17"	
4,5,6C	882339	ELR FOOTPLATE ASSEMBLY 18 -20"	
12-14	119495	EXTENSION CLAMP KIT	
15	129775	ALU FOOTPLATE HDWARE KIT	Ext tube not included; bracket (118093) not included

Pos.	Item Number	Description	Remarks
		Ship assembled part #	Use with multiple assemblies
	ASSY-HNG-FP	HANGER/FOOTPLATE ASSY REQUIRED	add with Hanger & Footplate kit

Note: For installation instructions please see the informations section to the right of this parts page.

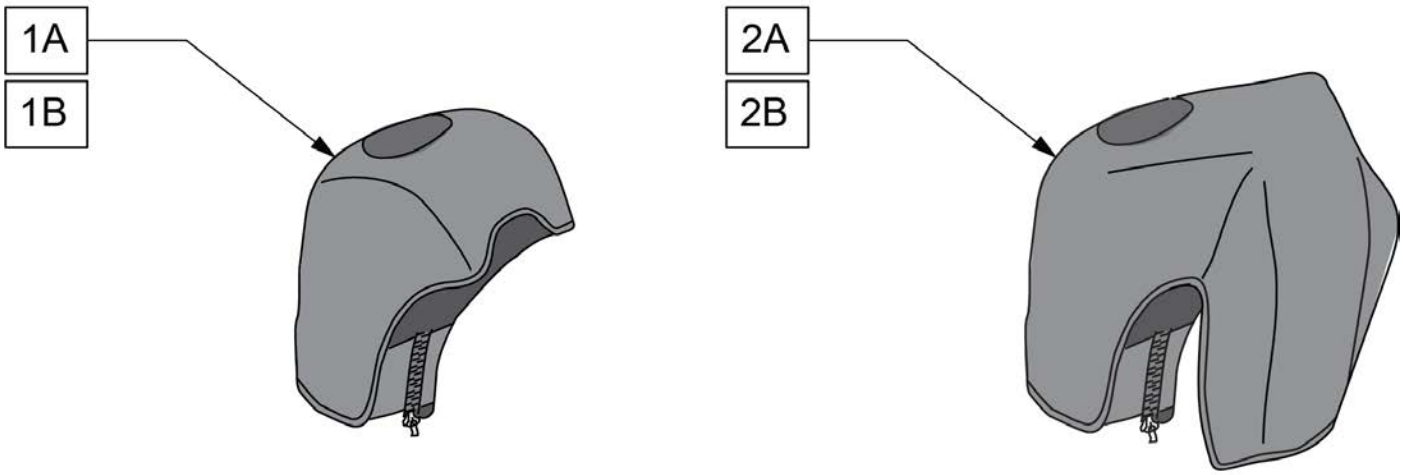

Pos.	Item Number	Description	Remarks
1A	163881	ELR NEOPRENE COVER PR	Pair
1B	163882	ELR GEL COVER PR	Pair
2A	163883	ALR NEOPRENE COVER PR	Pair
2B	163884	ALR GEL COVER PR	Pair

ARTICULATING HANGER

NOTE: WHEN USING AN ARTICULATING LEGREST ASSEMBLY, THE PULL-TO-LOCK WHEEL LOCK MUST BE USED.

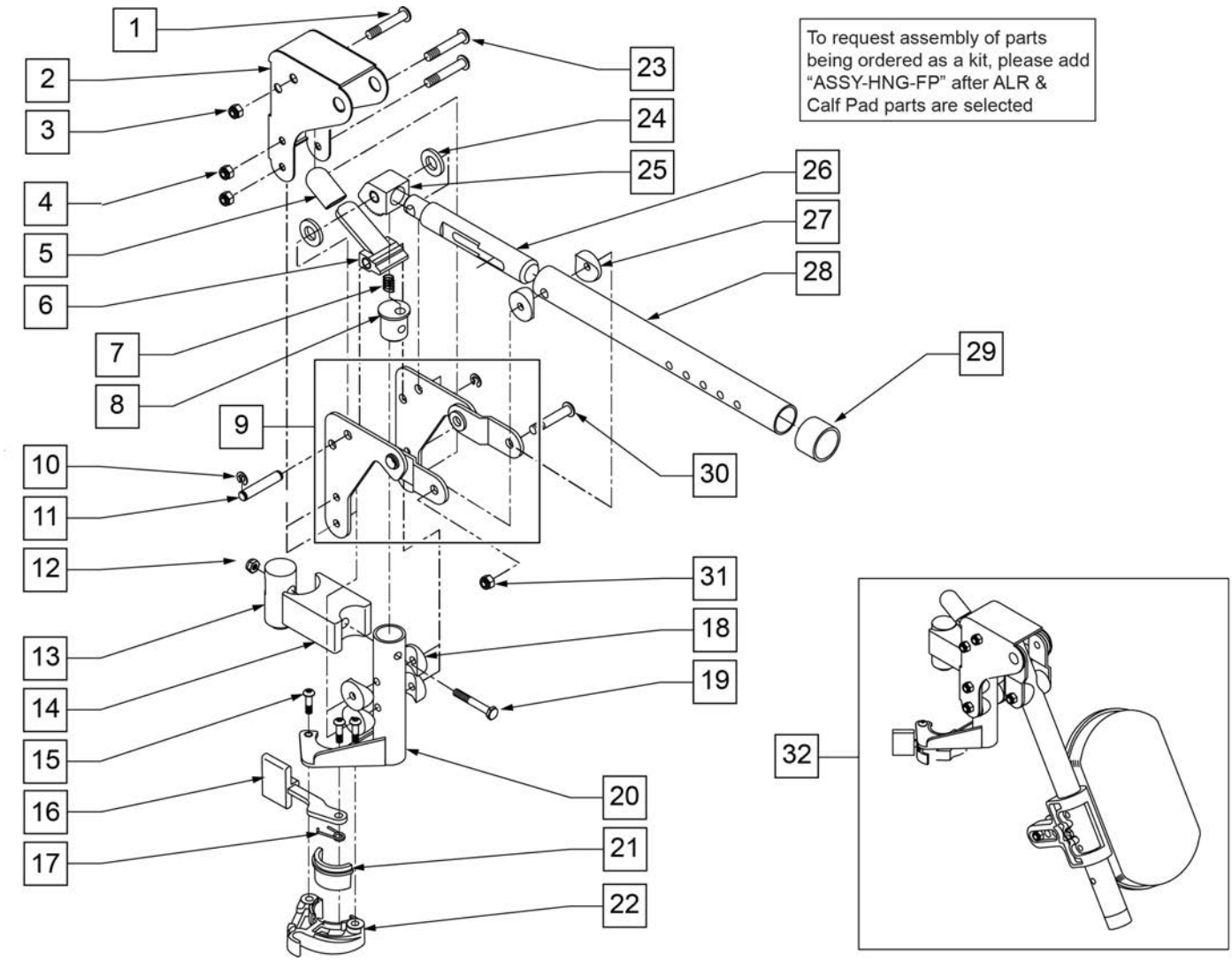

Pos.	Item Number	Description	Remarks
1	106983	5/16-18 x 2 BH C/S SHT THREAD	
2	562720	ALR COVER STD	
3	106937	5/16-18 NYLOCK NUT THIN	
4	106935	1/4-28 NYLOCK NUT THIN	
5	560501	ALR RELEASE LEVER COVER	
6	505902	ALR RELEASE LEVER	
7	321141	650L x 6 COIL SPRING	
8	483060	ALR SPRING PLUG	
9	880526	ALR BRACKET W/LINK R	RIGHT
9	880527	ALR BRACKET W/LINK L	LEFT
10	342000	1/4" E-CLIP	
11	481052	ALR RETAINING STUD	
12	106934	1/4-28 NYLOCK NUT	
13	122991	ALR PIVOT SADDLE WITH LEDGE	

Pos.	Item Number	Description	Remarks
14	122992	ALR PIVOT SADDLE BLOCK W/NOTCH	
15	226057	10/24 x .725 BTTN HD SOC BZ	
16	561079	S/A LATCH LEVER	
17	321136	S/A SPRING L RED	
17	321137	S/A SPRING R CLEAR	
18	561004	1" SADDLE 1/4" HOLE	
19	107016	1/4-28 x 3 G8 HEX C/S	
20	882466	ALR S/A TUBE ASSM L	LEFT
20	882467	ALR S/A TUBE ASSM R	RIGHT
23	106964	1/4-28 x 2 BH C/S	
24	561016	1" WASHER 5/16" HOLE	
25	505900	ALR RATCHET BLOCK	
26	483062	ALR RATCHET ROD	
27	561006	1" SADDLE 5/16" HOLE	
28	505026S	ALR TUBE ONLY	
29	561082	1" TUBE END BUSHING THIN	
30	226195	5/16-18 x 1.82 BH C/S	
31	106937	NUT NYLOCK THIN 5/16-18 ROHS	
21,22	881500	LATCH BLOCK ASSM R	RIGHT
21,22	881501	LATCH BLOCK ASSM L	LEFT
1-26	880092	HANGER ALR SUB ASSM R	RIGHT
1-26	880093	HANGER ALR SUB ASSM L	LEFT
1-31	641464S	HANGER ALR W/O PAD PNTD R	RIGHT
1-31	641465S	HANGER ALR W/O PAD PNTD L	LEFT
32	923051S	ALR HANGER ASSM W/PAD ALUM LB	PAIR
15-17,21,22	881521	S/A LATCH KIT CASTING RIGHT	
15-17,21,22	881522	S/A LATCH KIT CASTING LEFT	
		Ship assembled part #	Use with multiple assemblies
	ASSY-HNG-FP	HANGER/FOOTPLATE ASSY REQUIRED	add with Hanger & Footplate kit

ARTICULATING HANGER CALF PAD

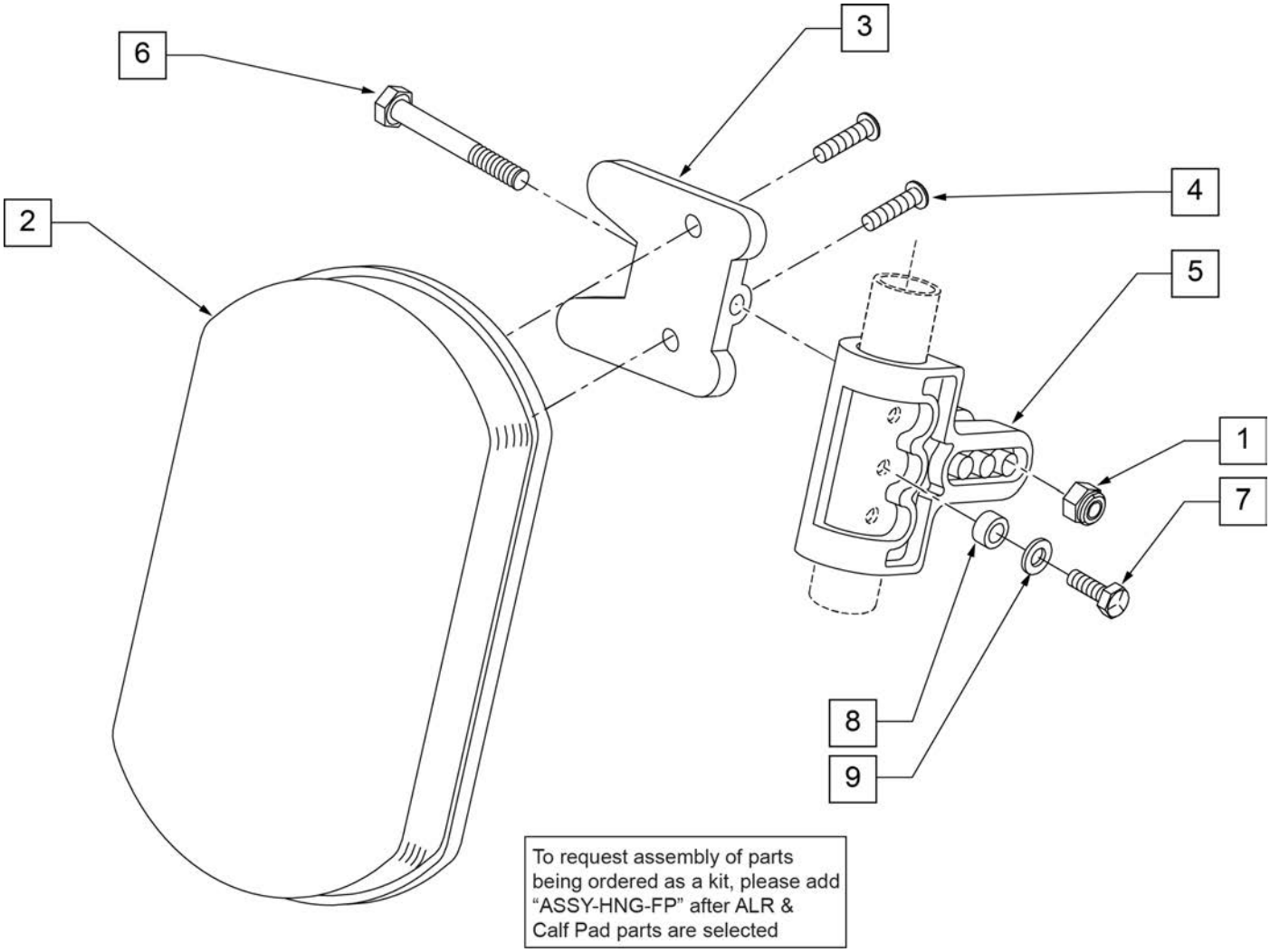

Pos.	Item Number	Description	Remarks
1	106936	5/16-18 NYLOCK NUT THICK	
2	755010	ALR/ELR PAD	
3	561096	ALR/ELR CALF PAD BRACKET	
4	281182	1/4-20 x 5/8 PAN PHIL	
5	561099	CALF CLAMP ALR	
6	107019	HHCS 5/16-18 X 3-1/2 ROHS	
7	107017	1/4-20 x 1 1/4 G8 HEX C/S	
8	483027	1/4 x 1/4 ALUMINUM SPACER BLK	
9	104414	WAVE WASHER 6 MM	
1-6	881399	ALR CALF PAD W/BRACKET	
1,3-9	881398	ALR CALF CLAMP ASSM W/O PAD	
1-9	881400	ALR CALF PAD ASSEMBLY (EA)	
		Ship assembled part #	Use with multiple assemblies
	ASSY-HNG-FP	HANGER/FOOTPLATE ASSY REQUIRED	add with Hanger & Footplate kit

NOTE: (Discontinued on Quickie 2 for 60° and 70° Hangers 10/23/99- Parts only).

NOTE: Used on Articulating Hanger Assemblies.

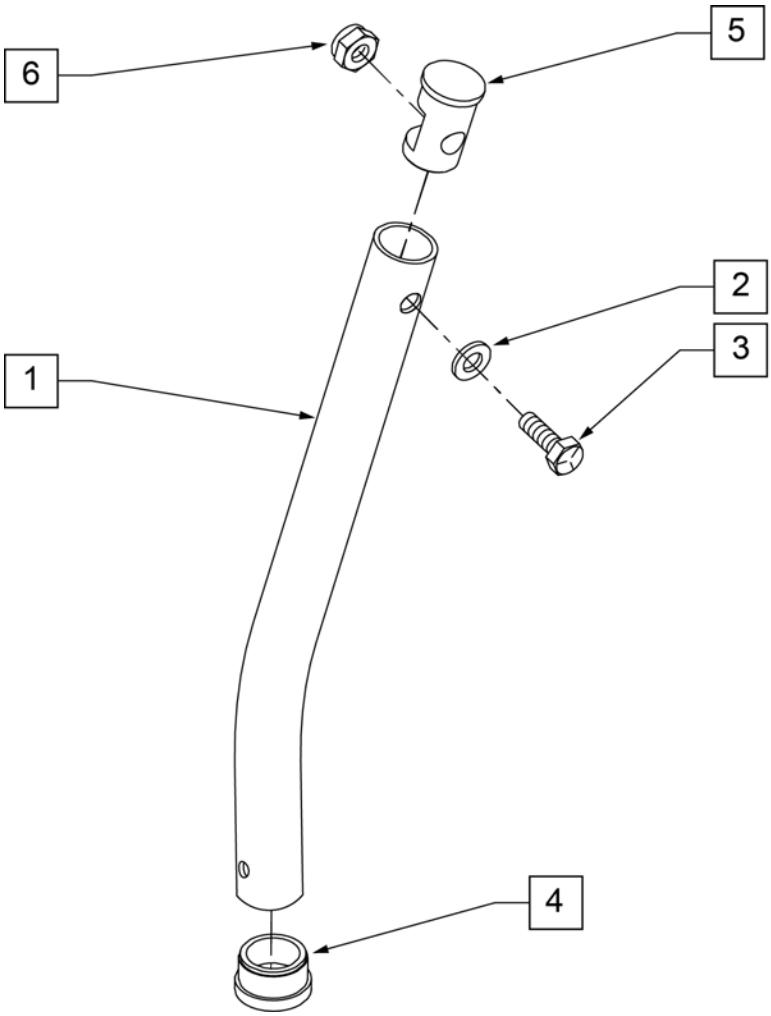

MEASURING GUIDE

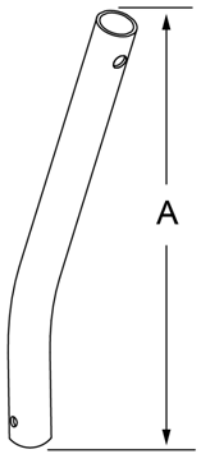

	"A"
SHORT	6 5/8"
MED	9"
LONG	11 5/8"
X-LONG	13 1/2"

Pos.	Item Number	Description
1	521010	FOOTREST EXT TUBE ONLY SHT BLK
1	521011	FOOTREST EXT TUBE ONLY MED BLK
1	521012	FOOTREST EXT TUBE ONLY LNG BLK
1	521013	FOOTREST EXT TUBE ONLY X-LNG BLK
2	104414	WAVE WASHER 6 MM
3	106958	HHCS 1/4-20 X 1 ROHS
4	561000-QU	3/4" INSERT PLUG .083
5	483553	FOOTREST INSERT PLUG Q2
6	106932	NUT NYLOCK 1/4-20 ROHS
1-6	921221	FOOTREST EXT TUBE SHT ASSM BLK (EA)
1-6	921222	FOOTREST EXT TUBE MED ASSM BLK (EA)
1-6	921223	FOOTREST EXT TUBE LNG ASSM BLK (EA)
1-6	921224	FOOTREST EXT TUBE X-LNG ASSM BLK (EA)

ADULT ANGLE-ADJUSTABLE FOOTPLATE EXT MOUNT [02/19/2020]

NOTE: FOR HIGH-MOUNT ADULT ANGLE-ADJUSTABLE FOOTPLATE, SEE "HIGH-MOUNT EXTENSION TUBE" PAGE.

NOTE: ORDER ITEMS 4B AND 7B FOR CHAIRS PRIOR TO 8/13/01.

NOTE: ONLY 1 WASHER PRIOR TO 8/13/01.

NOTE: See attached REFERENCE GUIDE.

To have complete Footrest ship assembled, choose compatible Hanger + Footplate part numbers and add "ASSY-HNG-FP" to order

INSET FORMULA
0" Inset (Seat Width) = Footrest Width
1" Inset (Seat Width) -2" = Footrest Width
"V" Hanger (Seat Width) -4" = Footrest Width
Offset Hanger Receiver (Seat Width) +2" = Footrest Width

MEASURING GUIDE

CHAIR WIDTH	"A"	"B"
10" - 11"	3 1/2"	7 1/4"
12" - 13"	4 1/2"	7 3/4"
14" - 15"	5 1/2"	7 3/4"
16" - 17"	6 1/2"	7 3/4"
18" - 20"	7 1/2"	7 3/4"

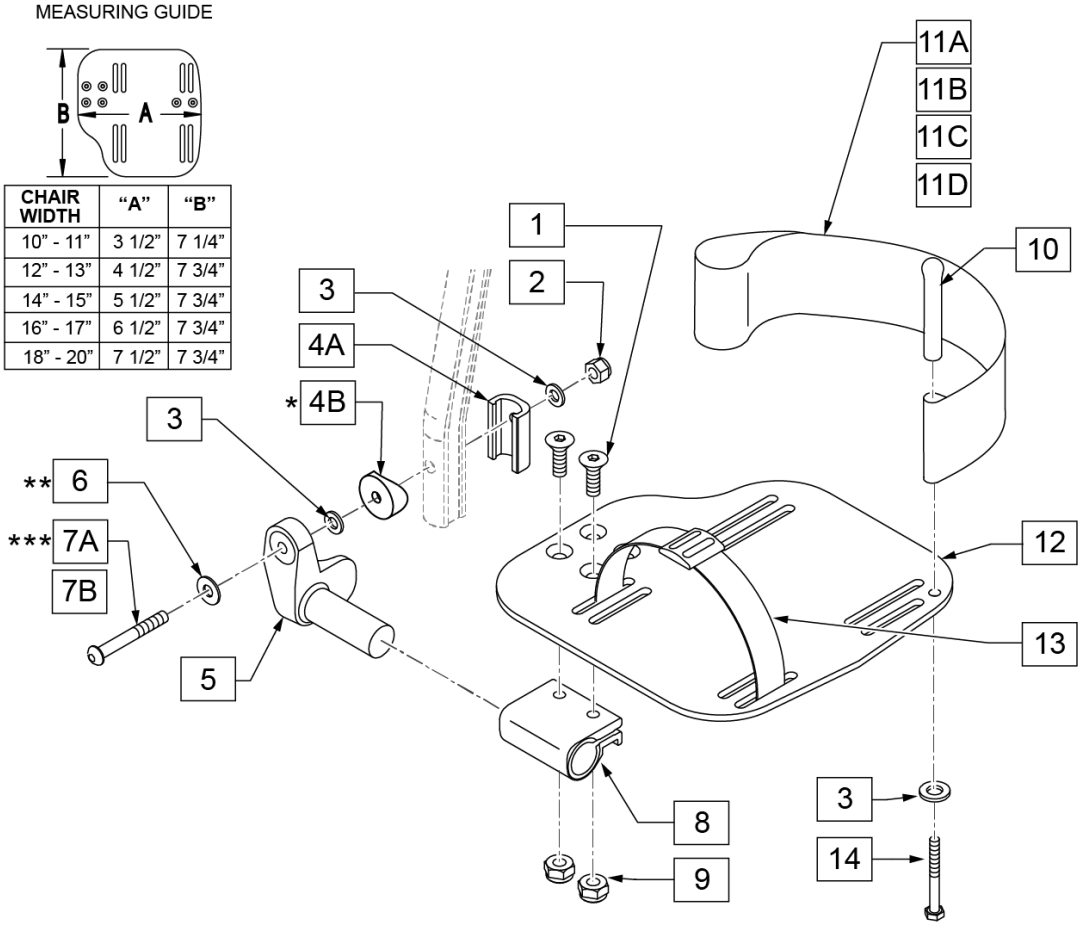

15 ADLT ANG ADJ FP D2 HDWR KIT

ITEM #	ILLUSTRATION	DESCRIPTION	QTY
1		1/4-28 X 7/8 FH C/S	2
2		1/4-28 AUTOMATION NUT	1
3		WASHER FLAT THIN AN 1/4	3
6		1/4" SAE WASHER	1
7A		BHCS 1/4-28 X 1-3/4	1
9		NUT NYLOCK THIN 1/4-28	2
10		HEEL LOOP PEG	1
14		1/4-20 X 1 HEX C/S	1

16 ADLT ANG ADJ FP RND HDWR KIT

ITEM #	ILLUSTRATION	DESCRIPTION	QTY
1		1/4-28 X 7/8 FH C/S	2
2		1/4-28 AUTOMATION NUT	1
3		WASHER FLAT THIN AN 1/4	3
4B		3/4" SADDLE 1" OD	1
6		1/4" SAE WASHER	1
7B		1/4-28 X 1.625 BH C/S BLK	1
9		NUT NYLOCK THIN 1/4-28	2
10		HEEL LOOP PEG	1
14		1/4-20 X 1 HEX C/S	1

Pos.	Item Number	Description	Remarks
1	106978	1/4-28 x 7/8 FH C/S	
2	106941	1/4-28 AUTOMATION NUT	

Pos.	Item Number	Description	Remarks
3	106944	WASHER FLAT THIN AN 1/4	
4A	483720	HANGER EXTENSION SADDLE LONG	USE W/ DOUBLE D EXT TUBE
4B	561055	3/4" SADDLE 1" OD	USE W/ ROUND EXT TUBE
5	541002	FTRST MOUNTING BRKT-3/8 RAD R	RIGHT
5	541003	FTRST MOUNTING BRKT-3/8 RAD L	LEFT
6	106945	WASHER FLAT SAE 1/4 ROHS	
7A	106962	BHCS 1/4-28 X 1-3/4 ROHS	use w/ Double D Ext Tube
7B	226167	1/4-28 x 1.625 BH C/S BLK	use w/ Round Ext Tube
8	550350	3/4" CLMP ADJ FT PLT	
9	106935	NUT NYLOCK THIN 1/4-28 ROHS	
10	561040	HEEL LOOP PEG	
11A	741154	HEEL LOOP 14-15 CMPST HEMI	used w/ 10-11" Adult Ang Adj Ftplts
11B	741155	HEEL LOOP 16-17 CMPST HEMI	used w/ 12 -13" Adult Ang Adj Ftplts
11C	741153	H/L 18-20 CMPST/14-15 ANG ADJ	used w/ 14-15"/16-17" Adult Ang Adj Ftplts
11D	741253	HEEL LOOP ADLT ADJ F/PLT 18-20	used w/ 18 -20" Adult Ang Adj Ftplts
12	500656	ADLT ANGL ADJ F/PLT 10/11" R	RIGHT
12	500657	ADLT ANGL ADJ F/PLT 10/11" L	LEFT
12	500658	ADLT ANGL ADJ F/PLT 12/13" R	RIGHT
12	500659	ADLT ANGL ADJ F/PLT 12/13" L	LEFT
12	500660	ADLT ANGL ADJ F/PLT 14/15	RIGHT
12	500661	ADLT ANGL ADJ F/PLT 14/15	LEFT
12	500662	ADLT ANGL ADJ F/PLT 16/17	RIGHT
12	500663	ADLT ANGL ADJ F/PLT 16/17	LEFT
12	500664	ADLT ANGL ADJ F/PLT 18-20	RIGHT
12	500665	ADLT ANGL ADJ F/PLT 18-20	LEFT
13	740260	TOE/ANKLE STRAP ADJ ADLT F/PLT	
14	106958	1/4-20 x 1 HEX C/S	
15	101533	ADLT ANG ADJ FP D2 HDWR KIT	for Double D Ext Tubes; Kit for one side
16	101534	ADLT ANG ADJ FP RND HDWR KIT	for Round Ext Tubes (Q2 HP only); Kit for one side
1-3,5,6,8,9,12	820526	AD ANG ADJ F/PLT R 12"/13" OMIT HL	RIGHT
1-3,5,6,8,9,12	820536	AD ANG ADJ F/PLT L 12"/13" OMT HL	LEFT
1-3,5,6,8,9,12	820460	FP ADLT ADJ 14/15 OMIT HL	RIGHT
1-3,5,6,8,9,12	820462	FP ADLT ADJ 14/15 OMIT HL	LEFT
1-3,5,6,8,9,12	820464	FP ADLT ADJ 16/17 OMIT HL	RIGHT
1-3,5,6,8,9,12	820466	FP ADLT ADJ 16/17 OMIT HL	LEFT
1-3,5,6,8,9,12	820468	FP ADLT ADJ 18-20 OMIT HL	RIGHT
1-3,5,6,8,9,12	820470	FP ADLT ADJ 18-20 OMIT HL	LEFT
1-3,5,6,8,9,12	921466	ADLT ANGL ADJ F/PLT 12"/13" OMIT HL	PAIR
1-3,5,6,8,9,12	921320	FP ADLT ADJ 14/15 OMIT HL	PAIR
1-3,5,6,8,9,12	921322	FP ADLT ADJ 16/17 OMIT HL	PAIR
1-3,5,6,8,9,12	921324	FP ADLT ADJ 18-20 OMIT HL	PAIR
1-3,5,6,8,9,11B,12	820522	AD ANGL ADJ F/PLT R 12/13" H/L	RIGHT
1-3,5,6,8,9,11B,12	820532	AD ANGL ADJ F/PLT L 12/13" H/L	LEFT
1-3,5,6,8-10,11C, 12,14	820461	FP ADLT ADJ 14/15 HL	RIGHT
1-3,5,6,8-10,11C, 12,14	820463	FP ADLT ADJ 14/15 HL	LEFT
1-3,5,6,8-10,11C, 12,14	820465	FP ADLT ADJ 16/17 HL	RIGHT
1-3,5,6,8-10,11C, 12,14	820467	FP ADLT ADJ 16/17 HL	LEFT
1-3,5,6,8-10,11D, 12,14	820469	FP ADLT ADJ 18-20 HL	RIGHT
1-3,5,6,8-10,11D, 12,14	820471	FP ADLT ADJ 18-20 HL	LEFT
1-3,5,6,8-10,11B, 12,14	921462	ADLT ANGL ADJ F/PLATE 12"/13" HL	PAIR
1-3,5,6,8-10,11C, 12,14	921321	FP ADLT ADJ 14/15 HL	PAIR
1-3,5,6,8-10,11C, 12,14	921323	FP ADLT ADJ 16/17 HL	PAIR
1-3,5,6,8-10,11D, 12,14	921325	FP ADLT ADJ 18-20 HL	PAIR
		Ship assembled part #	Use with multiple assemblies
	ASSY-HNG-FP	HANGER/FOOTPLATE ASSY REQUIRED	add with Hanger & Footplate kit

KIDS ANGLE ADJUSTABLE FOOTPLATE EXT MOUNT

[08/22/2019]

Note: Footplate Assemblies are set to footrest width; please see "Footplate Formula" table for seat width conversion.

Note: V Style Hangers are not available on Swing Away Style chairs effective 7/14/14; see the "Prior To" ordering guide for V Style footplate assemblies.

Note: Zippie Iris (ZRS&ZRSE) and Zippie TS (Z1A&Z1SE) only use Straight Extension Tube.

Note: if chair has High Mount Ext Tubes or if switching to High Mount Ext Tubes, see KAA Footplate w/ High Mount Extension Ordering Guide.

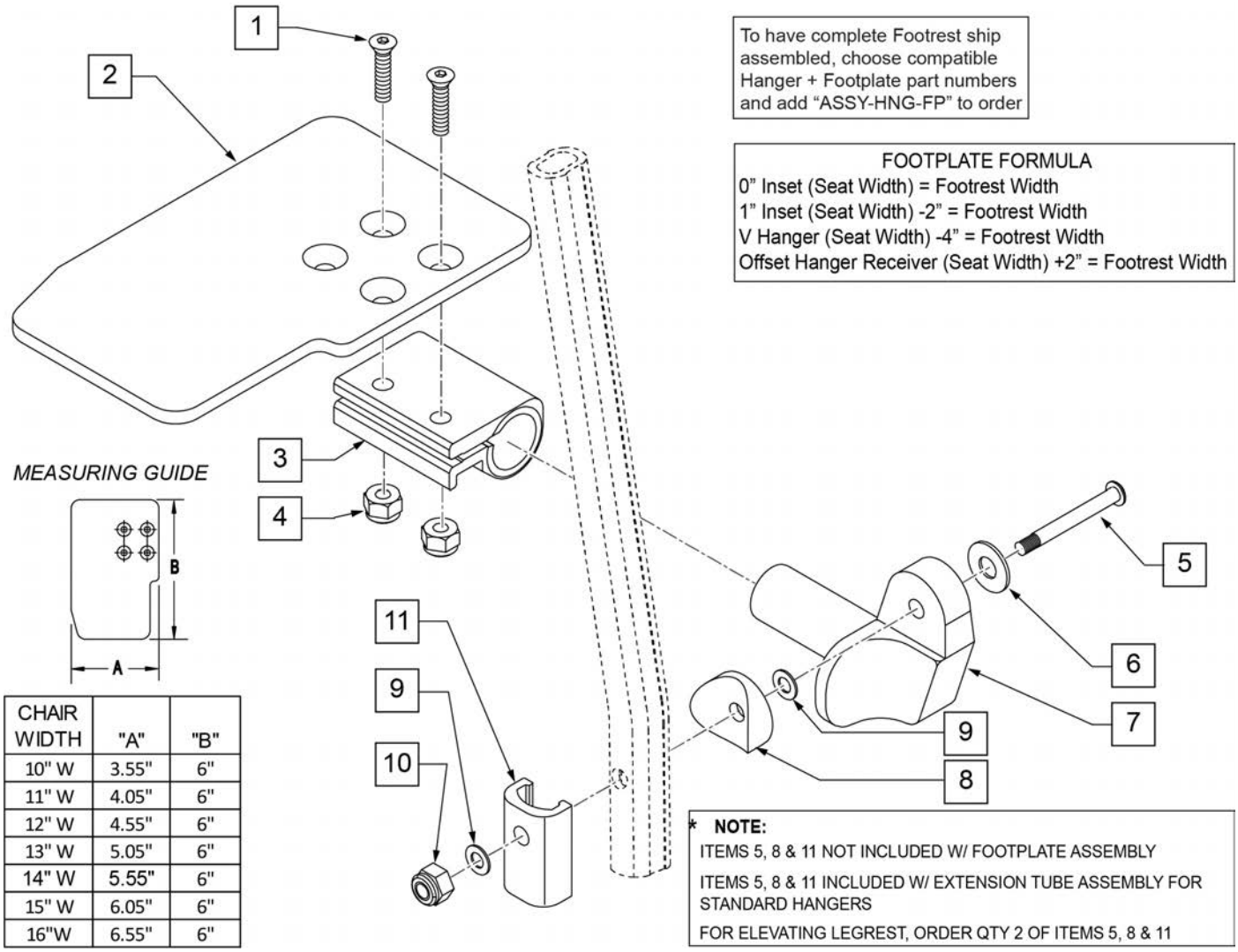

CHAIR WIDTH	"A"	"B"
10" W	3.55"	6"
11" W	4.05"	6"
12" W	4.55"	6"
13" W	5.05"	6"
14" W	5.55"	6"
15" W	6.05"	6"
16"W	6.55"	6"

Pos.	Item Number	Description	Remarks
1	106978	FHCS 1/4 -28 x 7/8 ROHS	

Pos.	Item Number	Description	Remarks
2	500635	KIDS ANGL ADJ F/PLT 10" R	Right
2	500636	KIDS ANGL ADJ F/PLT 10" L	Left
2	500637	KIDS ANGL ADJ F/PLT 11" R	Right
2	500638	KIDS ANGL ADJ F/PLT 11" L	Left
2	500639	KIDS ANGL ADJ F/PLT 12" R	Right
2	500640	KIDS ANGL ADJ F/PLT 12" L	Left
2	500641	KIDS ANGL ADJ F/PLT 13" R	Right
2	500642	KIDS ANGL ADJ F/PLT 13" L	Left
2	500643	KIDS ANGL ADJ F/PLT 14" R	Right
2	500644	KIDS ANGL ADJ F/PLT 14" L	Left
2	500645	KIDS ANGL ADJ F/PLT 15" R	Right
2	500646	KIDS ANGL ADJ F/PLT 15" L	Left
2	500647	KIDS ANGL ADJ F/PLT 16" R	Right
2	500648	KIDS ANGL ADJ F/PLT 16" L	Left
3	550350	3/4" CLAMP ADJ FOOTPLATE	
4	106935	NUT NYLOCK THIN 1/4 -28 ROHS	
5	106962	1/4-28 x 1 3/4 BH C/S BLK ZN (D2 EXTENSION TUBES)	
5	226167	1/4-28 x 1.625 BH C/S BLK (ROUND EXTENSION TUBES)	
6	106945	1/4 SAE WASHER	
7	541002	FTRST MOUNTING BRKT-3/8 RAD R	
7	541003	FTRST MOUNTING BRKT-3/8 RAD L	
8	561055	3/4" SADDLE 1" OD	
9	106944	WASHER FLAT THIN AN 1/4 ROHS	
10	106941	NUT AUTOMATION 1/4 -28 ROHS	
11	483720	HANGER EXTENSION SADDLE LONG	Use with Double D Ext Tube
1-4,6,7,9,10	828850	KIDS ANG ADJ F/PLT EXT-MNT 10"R	Right
1-4,6,7,9,10	828851	KIDS ANG ADJ F/PLT EXT-MNT 10"L	Left
1-4,6,7,9,10	828852	KIDS ANG ADJ F/PLT EXT-MNT 11"R	Right
1-4,6,7,9,10	828853	KIDS ANG ADJ F/PLT EXT-MNT 11"L	Left
1-4,6,7,9,10	828854	KIDS ANG ADJ F/PLT EXT-MNT 12"R	Right
1-4,6,7,9,10	828855	KIDS ANG ADJ F/PLT EXT-MNT 12"L	Left
1-4,6,7,9,10	828856	KIDS ANG ADJ F/PLT EXT-MNT 13"R	Right
1-4,6,7,9,10	828857	KIDS ANG ADJ F/PLT EXT-MNT 13"L	Left
1-4,6,7,9,10	828858	KIDS ANG ADJ F/PLT EXT-MNT 14"R	Right
1-4,6,7,9,10	828859	KIDS ANG ADJ F/PLT EXT-MNT 14"L	Left
1-4,6,7,9,10	828860	KIDS ANG ADJ F/PLT EXT-MNT 15"R	Right
1-4,6,7,9,10	828861	KIDS ANG ADJ F/PLT EXT-MNT 15"L	Left
1-4,6,7,9,10	828862	KIDS ANG ADJ F/PLT EXT-MNT 16"R	Right
1-4,6,7,9,10	828863	KIDS ANG ADJ F/PLT EXT-MNT 16"L	Left
1-4,6,7,9,10	921280	KIDS ANG ADJ F/PLT EXT-MNT 10"	Pair
1-4,6,7,9,10	921281	KIDS ANG ADJ F/PLT EXT-MNT 11"	Pair
1-4,6,7,9,10	921282	KIDS ANG ADJ F/PLT EXT-MNT 12"	Pair
1-4,6,7,9,10	921283	KIDS ANG ADJ F/PLT EXT-MNT 13"	Pair
1-4,6,7,9,10	921284	KIDS ANG ADJ F/PLT EXT-MNT 14"	Pair
1-4,6,7,9,10	921285	KIDS ANG ADJ F/PLT EXT-MNT 15"	Pair
1-4,6,7,9,10	921286	KIDS ANG ADJ F/PLT EXT-MNT 16"	Pair
		Ship assembled part #	Use with multiple assemblies
	ASSY-HNG-FP	HANGER/FOOTPLATE ASSY REQUIRED	add with Hanger & Footplate kit

90 DEG ARTICULATING HANGER

[09/2011]

NOTE: WHEN USING AN ARTICULATING LEGREST ASSEMBLY, THE PULL-TO-LOCK WHEEL LOCK MUST BE USED.

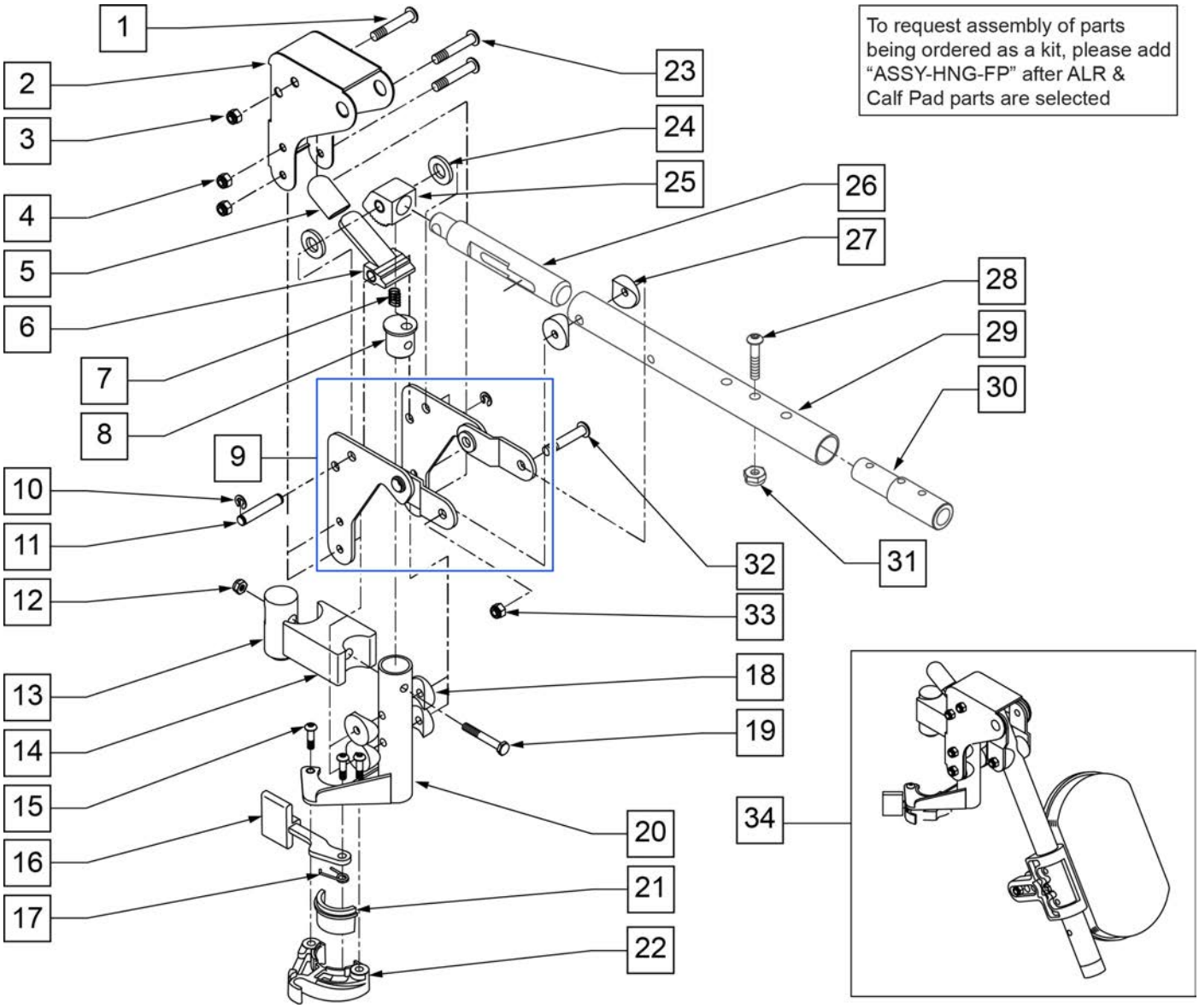

Pos.	Item Number	Description	Remarks
1	106983	5/16-18 x 2 BH C/S SHT THREAD	
2	562720	ALR COVER STD	
3	106937	5/16-18 NYLOCK NUT THIN	
4	106935	NUT NYLOCK THIN 1/4-28 ROHS	
5	560501	ALR RELEASE LEVER COVER	
6	505902	ALR RELEASE LEVER	
7	321141	650L x 6 COIL SPRING	
8	483060	ALR SPRING PLUG	
9	880526	ALR BRACKET W/LINK R	
9	880527	ALR BRACKET W/LINK L	
10	342000	1/4" E-CLIP	

Pos.	Item Number	Description	Remarks
11	481052	ALR RETAINING STUD	
12	106934	1/4-28 NYLOCK NUT	
13	500177	ALR PIVOT SADDLE .125	
14	500178	ALR PIVOT SADDLE BLOCK	
15	226057	10/24 x .725 BTTN HD SOC BZ	
16	561079	S/A LATCH LEVER	
17	321136	S/A SPRING R CLEAR	
17	321137	S/A SPRING R	
18	561004	1' SADDLE 1/4 HOLE	
19	107016	1/4-28 x 3 G8 HEX C/S	
20	882466	ALR S/A TUBE ASSM L	
20	882467	ALR S/A TUBE ASSM R	
23	106964	1/4-28 x 2 BH C/S	
24	561016	1" WASHER 5/16 HOLE	
25	505900	ALR RATCHET BLOCK	
26	483062	ALR RATCHET ROD	
27	561006	1" SADDLE 5/16" HOLE	
28	106961	1/4-28 x 1 1/4 BH C/S	
29	505025S	KIDS ALR LEGREST TUBE 11-13"	
30	500150	2" FOOTREST EXT TUBE	
31	106935	NUT NYLOCK THIN 1/4-28 ROHS	
32	226195	5/16-18 x 1.82 BH C/S	
33	106937	5/16-18 NYLOCK NUT THIN	
34	923053S	KIDS ALR HANGER ASSEM W/PAD	(PR) (SPECIFY COLOR)
28,30,31	111505	2" FTREST EXT W/ HDWR	
21,22	881500	LATCH BLOCK ASSM R	
21,22	881501	LATCH BLOCK ASSM L	
1-31	641432S	KIDS ALR HNGR W/O PAD R 2" EXT	
1-31	641433S	KIDS ALR HNGR W/O PAD L 2" EXT	
		Ship assembled part #	Use with multiple assemblies
	ASSY-HNG-FP	HANGER/FOOTPLATE ASSY REQUIRED	add with Hanger & Footplate kit

90 DEG ARTICULATING HANGER CALF PAD

[09/2011]

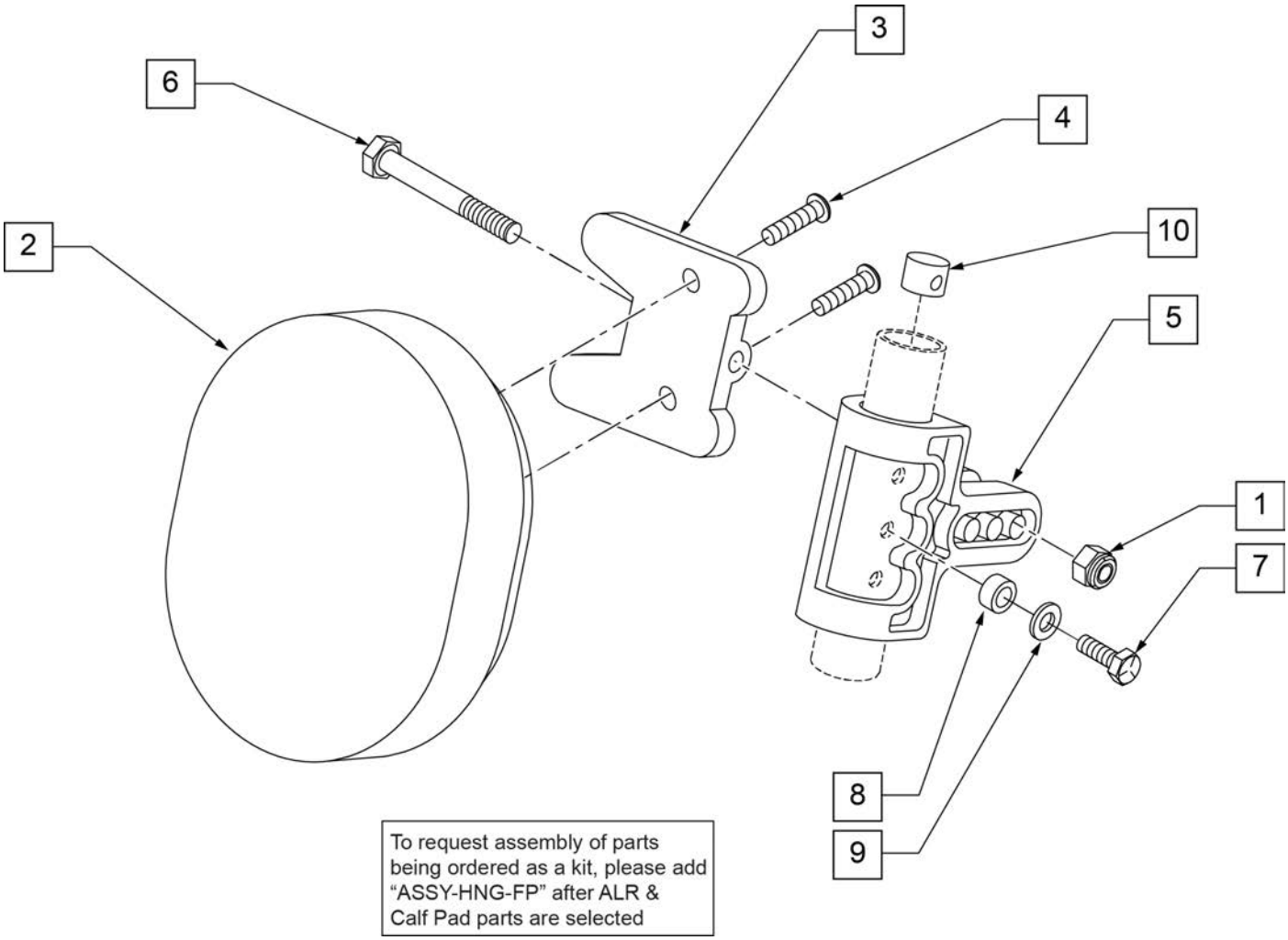

Pos.	Item Number	Description	Remarks
1	106936	5/16-18 NYLOCK NUT THICK	
2	755020	4 x 5 OVAL PAD	
3	561096	ALR/ELR CALF PAD BRACKET	
4	281181	1/4-20 x 3/4 PAN PHIL	
5	561099	CALF CLAMP ALR	
6	107019	HHCS 5/16-18 X 3-1/2 ROHS	
7	107017	1/4-20 x 1 1/4 G8 HEX C/S	
8	483027	1/4 x 1/4 ALUMINUM SPACER	
9	262130	6mm WASHER WAVE	
10	500151	KIDS ALR RETAINING PLUG	
1-6	881401	KIDS ALR OVAL PAD W/BRACKET	
1-10	881402	KIDS ALR OVAL PAD ASSEMBLY (EA)	
		Ship assembled part #	Use with multiple assemblies
	ASSY-HNG-FP	HANGER/FOOTPLATE ASSY REQUIRED	add with Hanger & Footplate kit

KIDS ANGLE ADJ FOOTPLATE FRONT MOUNT

To have complete Footrest ship assembled, choose compatible Hanger + Footplate part numbers and add “ASSY-HNG-FP” to order

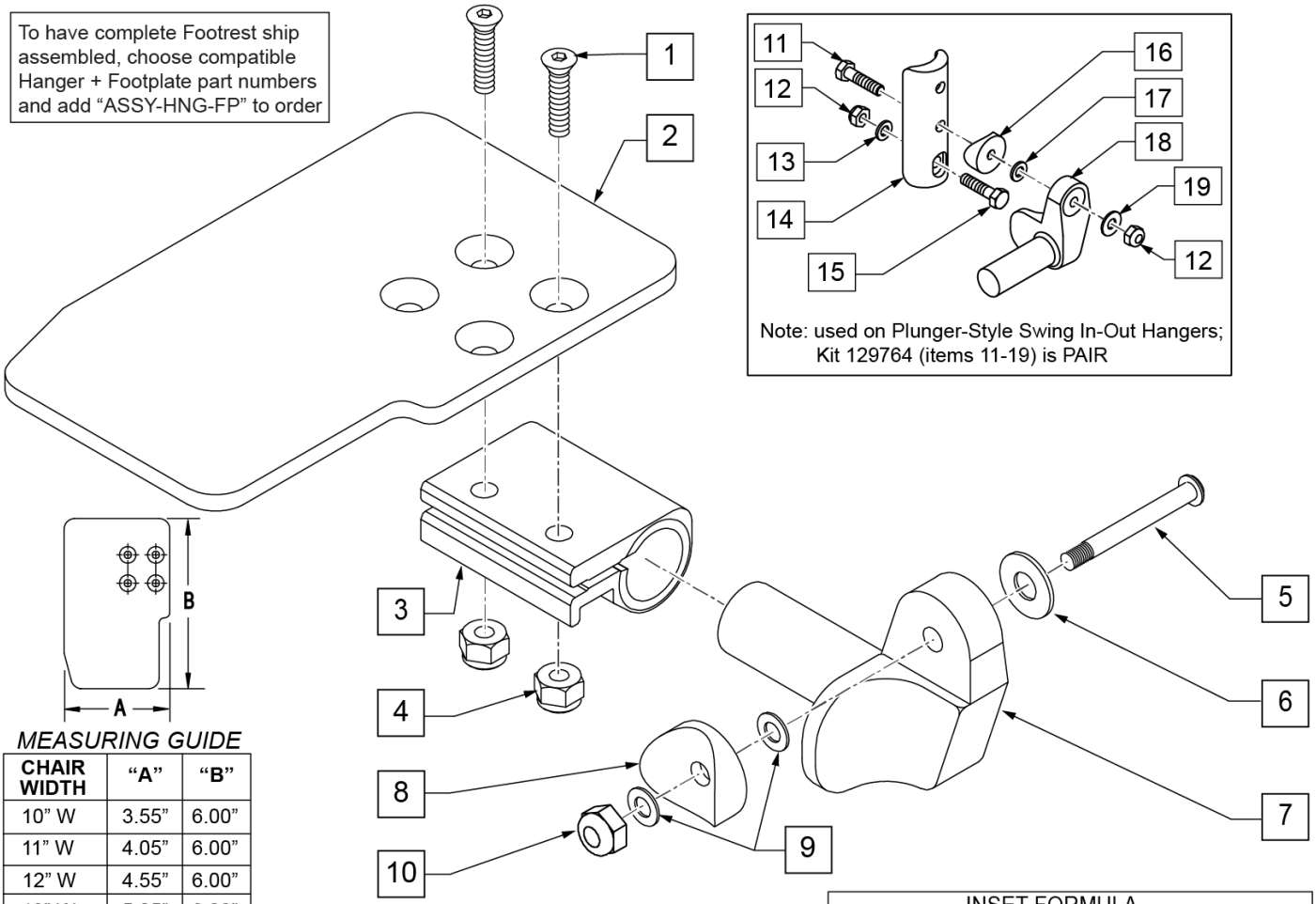

Note: used on Plunger-Style Swing In-Out Hangers; Kit 129764 (items 11-19) is PAIR

MEASURING GUIDE

CHAIR WIDTH	“A”	“B”
10” W	3.55”	6.00”
11” W	4.05”	6.00”
12” W	4.55”	6.00”
13” W	5.05”	6.00”
14” W	5.55”	6.00”
15” W	6.05”	6.00”
16” W	6.55”	6.00”

INSET FORMULA

0” Inset (Seat Width) = Footrest Width
1” Inset (Seat Width) -2” = Footrest Width
“V” Hanger (Seat Width) -4” = Footrest Width
Offset Hanger Receiver (Seat Width) +2” = Footrest Width

Pos.	Item Number	Description	Remarks
1	106978	FHCS 1/4-28 X 7/8 ROHS	
2	500635	KIDS ANGL ADJ F/PLT 10	RIGHT
2	500636	KIDS ANGL ADJ F/PLT 10	LEFT
2	500637	KIDS ANGL ADJ F/PLT 11	RIGHT
2	500638	KIDS ANGL ADJ F/PLT 11	LEFT
2	500639	KIDS ANGL ADJ F/PLT 12	RIGHT
2	500640	KIDS ANGL ADJ F/PLT 12	LEFT
2	500641	KIDS ANGL ADJ F/PLT 13	RIGHT
2	500642	KIDS ANGL ADJ F/PLT 13	LEFT
2	500643	KIDS ANGL ADJ F/PLT 14	RIGHT
2	500644	KIDS ANGL ADJ F/PLT 14	LEFT
2	500645	KIDS ANGL ADJ F/PLT 15	RIGHT
2	500646	KIDS ANGL ADJ F/PLT 15	LEFT
2	500647	KIDS ANGL ADJ F/PLT 16	RIGHT
2	500648	KIDS ANGL ADJ F/PLT 16	LEFT
3	550350	3/4 CLAMP ADJ FOOTPLATE	
4	106935	NUT NYLOCK THIN 1/4-28 ROHS	
5	226147	1/4-28 X 1.85 BH C/S BLK ZN	

Pos.	Item Number	Description	Remarks
6	106945	WASHER FLAT SAE 1/4 ROHS	
7	541000	FTRST MOUNTING BRKT 1/2" RAD R	RIGHT
7	541001	FTRST MOUNTING BRKT 1/2" RAD L	LEFT
8	561004	1 SADDLE 1/4 HOLE	
9	106943	WASHER FLAT THIN AN 1/4	
10	106941	NUT AUTOMATION 1/4-28 ROHS	
11	102268-001	HHCS M6 X 1 X 25	
12	132626	NUT AUTOMATION M6 X 1.0 ROHS	
13	107383	WASHER FLAT M6 ROHS	
15	118198	HHCS M6 X 1 X 40 PART NP	
16	561004	1" SADDLE 1/4" HOLE	
17	106943	WASHER FLAT AN 1/4 ROHS	
19	106945	WASHER FLAT SAE 1/4 ROHS	
1-4	158632	KAA F/PLT KIT 10 RT	RIGHT; used with Front Mount Adapter Kit on Plunger-Style Swing In/Out Hangers
1-4	158633	KAA F/PLT KIT 10 LT	LEFT; used with Front Mount Adapter Kit on Plunger-Style Swing In/Out Hangers
1-4	158634	KAA F/PLT KIT 11 RT	RIGHT; used with Front Mount Adapter Kit on Plunger-Style Swing In/Out Hangers
1-4	158635	KAA F/PLT KIT 11 LT	LEFT; used with Front Mount Adapter Kit on Plunger-Style Swing In/Out Hangers
1-4	158636	KAA F/PLT KIT 12 RT	RIGHT; used with Front Mount Adapter Kit on Plunger-Style Swing In/Out Hangers
1-4	158637	KAA F/PLT KIT 12 LT	LEFT; used with Front Mount Adapter Kit on Plunger-Style Swing In/Out Hangers
1-4	158638	KAA F/PLT KIT 13 RT	RIGHT; used with Front Mount Adapter Kit on Plunger-Style Swing In/Out Hangers
1-4	158639	KAA F/PLT KIT 13 LT	LEFT; used with Front Mount Adapter Kit on Plunger-Style Swing In/Out Hangers
1-4	158640	KAA F/PLT KIT 14 RT	RIGHT; used with Front Mount Adapter Kit on Plunger-Style Swing In/Out Hangers
1-4	158641	KAA F/PLT KIT 14 LT	LEFT; used with Front Mount Adapter Kit on Plunger-Style Swing In/Out Hangers
1-4	158642	KAA F/PLT KIT 15 RT	RIGHT; used with Front Mount Adapter Kit on Plunger-Style Swing In/Out Hangers
1-4	158643	KAA F/PLT KIT 15 LT	LEFT; used with Front Mount Adapter Kit on Plunger-Style Swing In/Out Hangers
1-4	158644	KAA F/PLT KIT 16 RT	RIGHT; used with Front Mount Adapter Kit on Plunger-Style Swing In/Out Hangers
1-4	158645	KAA F/PLT KIT 16 LT	LEFT; used with Front Mount Adapter Kit on Plunger-Style Swing In/Out Hangers
1-10	828821	KIDS ANG ADJ F/PLT ASSM 10	RIGHT; used with Old-Style Latch Block Swing In/Out & S/A Hangers
1-10	828822	KIDS ANG ADJ F/PLT ASSM 10	LEFT; used with Old-Style Latch Block Swing In/Out & S/A Hangers
1-10	828823	KIDS ANG ADJ F/PLT ASSM 11	RIGHT; used with Old-Style Latch Block Swing In/Out & S/A Hangers
1-10	828824	KIDS ANG ADJ F/PLT ASSM 11	LEFT; used with Old-Style Latch Block Swing In/Out & S/A Hangers
1-10	828825	KIDS ANG ADJ F/PLT ASSM 12	RIGHT; used with Old-Style Latch Block Swing In/Out & S/A Hangers
1-10	828826	KIDS ANG ADJ F/PLT ASSM 12	LEFT; used with Old-Style Latch Block Swing In/Out & S/A Hangers
1-10	828827	KIDS ANG ADJ F/PLT ASSM 13	RIGHT; used with Old-Style Latch Block Swing In/Out & S/A Hangers
1-10	828828	KIDS ANG ADJ F/PLT ASSM 13	LEFT; used with Old-Style Latch Block Swing In/Out & S/A Hangers
1-10	828829	KIDS ANG ADJ F/PLT ASSM 14	RIGHT; used with Old-Style Latch Block Swing In/Out & S/A Hangers
1-10	828830	KIDS ANG ADJ F/PLT ASSM 14	LEFT; used with Old-Style Latch Block Swing In/Out & S/A Hangers
1-10	828831	KIDS ANG ADJ F/PLT ASSM 15	RIGHT; used with Old-Style Latch Block Swing In/Out & S/A Hangers
1-10	828832	KIDS ANG ADJ F/PLT ASSM 15	LEFT; used with Old-Style Latch Block Swing In/Out & S/A Hangers

Pos.	Item Number	Description	Remarks
1-10	828833	KIDS ANG ADJ F/PLT ASSM 16	RIGHT; used with Old-Style Latch Block Swing In/Out & S/A Hangers
1-10	828834	KIDS ANG ADJ F/PLT ASSM 16	LEFT; used with Old-Style Latch Block Swing In/Out & S/A Hangers
1-10	921226	KIDS ANG ADJ F/PLT ASSM 10	PAIR; used with Old-Style Latch Block Swing In/Out & S/A Hangers
1-10	921227	KIDS ANG ADJ F/PLT ASSM 11	PAIR; used with Old-Style Latch Block Swing In/Out & S/A Hangers
1-10	921228	KIDS ANG ADJ F/PLT ASSM 12	PAIR; used with Old-Style Latch Block Swing In/Out & S/A Hangers
1-10	921229	KIDS ANG ADJ F/PLT ASSM 13	PAIR; used with Old-Style Latch Block Swing In/Out & S/A Hangers
1-10	921230	KIDS ANG ADJ F/PLT ASSM 14	PAIR; used with Old-Style Latch Block Swing In/Out & S/A Hangers
1-10	921231	KIDS ANG ADJ F/PLT ASSM 15	PAIR; used with Old-Style Latch Block Swing In/Out & S/A Hangers
1-10	921232	KIDS ANG ADJ F/PLT ASSM 16	PAIR; used with Old-Style Latch Block Swing In/Out & S/A Hangers
11-19	129764	AAA FRNT MNT ADAPTER KIT PR	AAA FRNT MNT fits both Kids and Adult Angle Adjustable Footplates
		Ship assembled part #	Use with multiple assemblies
	ASSY-HNG-FP	HANGER/FOOTPLATE ASSY REQUIRED	add with Hanger & Footplate kit

ADULT ANGLE-ADJ FOOTPLATE FRONT MOUNT

[03/2017]

To have complete Footrest ship assembled, choose compatible Hanger + Footplate part numbers and add "ASSY-HNG-FP" to order

INSET FORMULA
0" Inset (Seat Width) = Footrest Width
1" Inset (Seat Width) -2" = Footrest Width
"V" Hanger (Seat Width) -4" = Footrest Width
Offset Hanger Receiver (Seat Width) +2" = Footrest Width

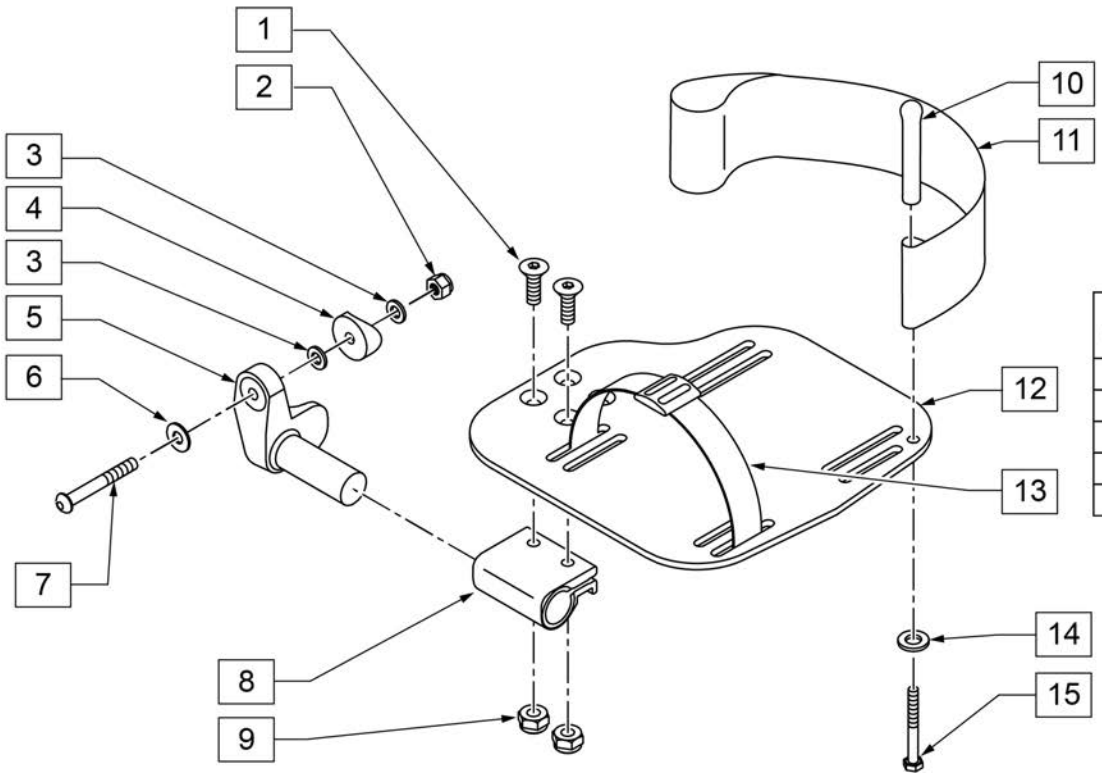

MEASURING GUIDE

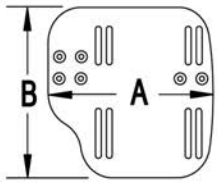

CHAIR WIDTH	"A"	"B"
10"-11"	3 1/2"	7 1/4"
12"-13"	4 1/2"	7 3/4"
14"-15"	5 1/2"	7 3/4"
16"-17"	6 1/2"	7 3/4"
18"-20"	7 1/2"	7 3/4"

Pos.	Item Number	Description	Remarks
1	106978	FHCS 1/4-28 X 7/8 ROHS	
2	106941	NUT AUTOMATION 1/4-28 ROHS	
3	106943	WASHER FLAT AN 1/4 ROHS	
4	561004	1" SADDLE 1/4" HOLE	
5	541000	FOOTREST MOUNTING BRKT 1/2" RAD R	RIGHT
5	541001	FOOTREST MOUNTING BRKT 1/2" RAD L	LEFT
6	106945	WASHER FLAT SAE 1/4 ROHS	
7	106964	BHCS 1/4-28 X 2	
8	550350	3/4" CLAMP ADJ FOOTPLATE	
9	106935	NUT NYLOCK THIN 1/4-28 ROHS	
10	561040	HEEL LOOP PEG	
11	741153	HEEL LOOP 18-20 CMPST/14-15 ANG ADJ	USED W/ 14-15"/16-17" ADULT ANG ADJ FTPLTS
11	741253	HEEL LOOP ADLT ADJ F/PLT 18-20	USED W/ 18 -20" ADULT ANG ADJ FTPLTS
12	500656	ADULT ANGL ADJ F/PLT 10/11	RIGHT
12	500657	ADULT ANGL ADJ F/PLT 10/11	LEFT
12	500658	ADULT ANGL ADJ F/PLT 12/13	RIGHT
12	500659	ADULT ANGL ADJ F/PLT 12/13	LEFT
12	500660	ADULT ANGL ADJ F/PLT 14/15	RIGHT
12	500661	ADULT ANGL ADJ F/PLT 14/15	LEFT
12	500662	ADULT ANGL ADJ F/PLT 16/17	RIGHT
12	500663	ADULT ANGL ADJ F/PLT 16/17	LEFT
12	500664	ADULT ANGL ADJ F/PLT 18-20	RIGHT

Pos.	Item Number	Description	Remarks
12	500665	ADULT ANGL ADJ F/PLT 18-20	LEFT
13	740260	TOE-ANKLE STRAP ADJ ADULT FOOTPLATE	
14	106943	WASHER FLAT AN 1/4 ROHS	
15	106958	HHCS 1/4-20 X 1 ROHS	
1-9,12	820544	FP ADULT ADJ 90D 10/11 R	RIGHT
1-9,12	820554	FP ADULT ADJ 90D 10/11 L	LEFT
1-9,12	820546	FP ADULT ADJ 90D 12/13 R	RIGHT
1-9,12	820556	FP ADULT ADJ 90D 12/13 L	LEFT
1-9,12	820472	FP ADULT ADJ 90D 14/15 R	RIGHT
1-9,12	820473	FP ADULT ADJ 90D 14/15 L	LEFT
1-9,12	820474	FP ADULT ADJ 90D 16/17 R	RIGHT
1-9,12	820475	FP ADULT ADJ 90D 16/17 L	LEFT
1-9,12	820476	FP ADULT ADJ 90D 18-20 R	RIGHT
1-9,12	820477	FP ADULT ADJ 90D 18-20 L	LEFT
1-9,12	921474	ADULT ANGL ADJ 90D 10/11 OMIT H/L	PAIR
1-9,12	921476	ADULT ANGL ADJ 90D 12/13 OMIT H/L	PAIR
1-9,12	921330	ADULT ANGL ADJ 90D 14/15 OMIT H/L	PAIR
1-9,12	921331	ADULT ANGL ADJ 90D 16/17 OMIT H/L	PAIR
1-9,12	921332	ADULT ANGL ADJ 90D 18-20 OMIT H/L	PAIR
1-12,14,15	820540	F/PLT ADULT ADJ 90D 10/11 R W/ HL	RIGHT
1-12,14,15	820550	F/PLT ADULT ADJ 90D 10/11 L W/ HL	LEFT
1-12,14,15	820542	F/PLT ADULT ADJ 90D 12/13 R W/ HL	RIGHT
1-12,14,15	820552	F/PLT ADULT ADJ 90D 12/13 L W/ HL	LEFT
1-12,14,15	820478	F/PLT ADULT ADJ 90D 14/15 R W/ HL	RIGHT
1-12,14,15	820479	F/PLT ADULT ADJ 90D 14/15 L W/ HL	LEFT
1-12,14,15	820480	F/PLT ADULT ADJ 90D 16/17 R W/ HL	RIGHT
1-12,14,15	820481	F/PLT ADULT ADJ 90D 16/17 L W/ HL	LEFT
1-12,14,15	820482	F/PLT ADULT ADJ 90D 18-20 R W/ HL	RIGHT
1-12,14,15	820483	F/PLT ADULT ADJ 90D 18-20 L W/ HL	LEFT
1-12,14,15	921470	F/PLT ADULT ADJ 90D 10/11 W/ HL	PAIR
1-12,14,15	921472	F/PLT ADULT ADJ 90D 12/13 W/ HL	PAIR
1-12,14,15	921333	F/PLT ADULT ADJ 90D 14/15 W/ HL	PAIR
1-12,14,15	921334	F/PLT ADULT ADJ 90D 16/17 W/ HL	PAIR
1-12,14,15	921335	F/PLT ADULT ADJ 90D 18-20 W/ HL	PAIR
		Ship assembled part #	Use with multiple assemblies
	ASSY-HNG-FP	HANGER/FOOTPLATE ASSY REQUIRED	add with Hanger & Footplate kit

Note: When retrofitting ALR to a chair with S/A Hangers please order Qty 2 of p/n 107491(Item 27).

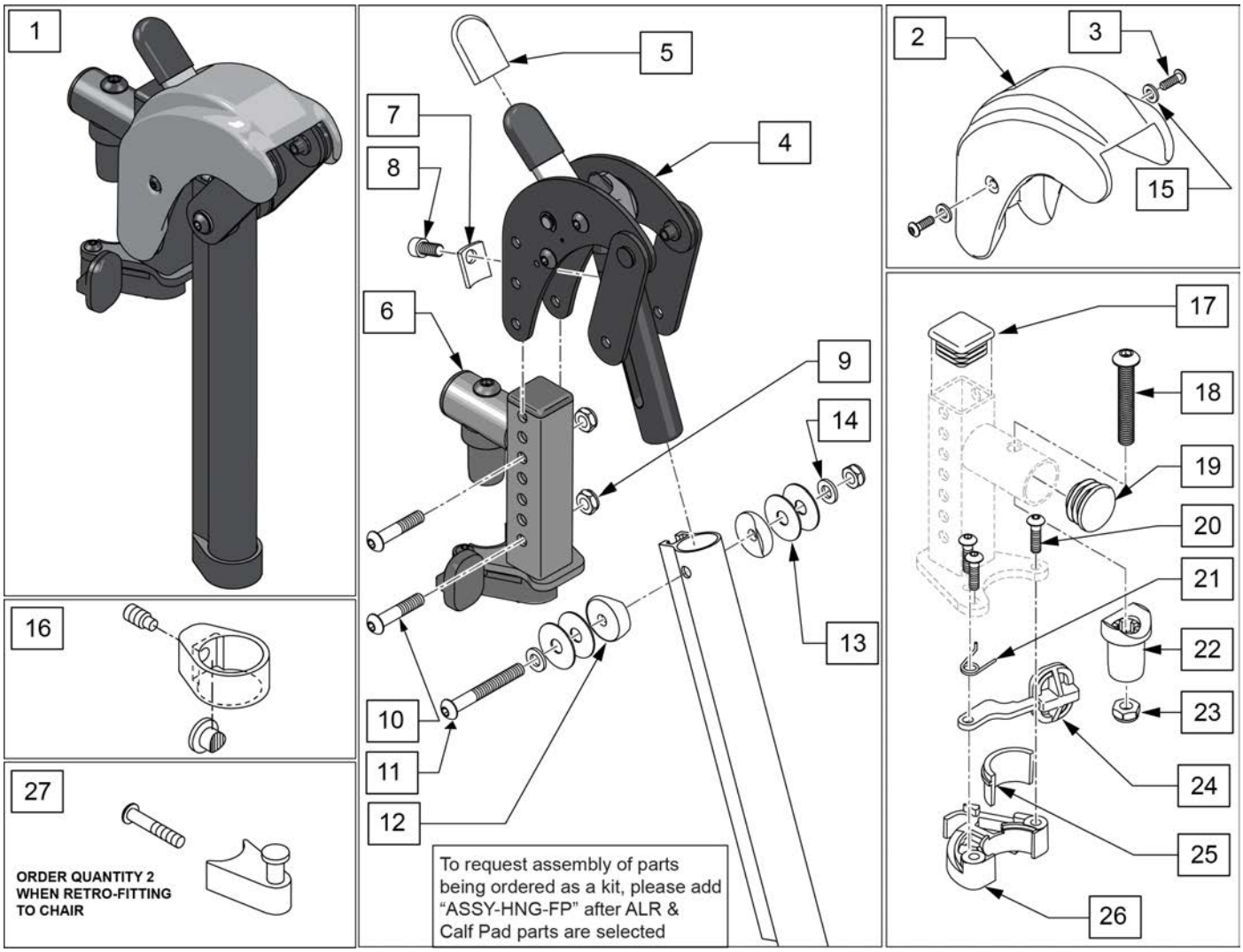

Pos.	Item Number	Description	Remarks
1	129631S	ALR KIT R	Right-order item 27 when retro-fitting to chair
1	129632S	ALR KIT L	Left-order item 27 when retro-fitting to chair
1	129630S	ALR PAIR KIT	Pair-order item 27 when retro-fitting to chair
2,3,15	129633	ALR SHROUD KIT	1 side
3	127135	BHCS 8-32 X 1/2 BLK	
4	127153	HEMI ALR SUB ASSM	
5	560501	ALR REL LEVER COVER	
6	127114	HEMI RECEIVER ASSM ELR ALR R	Right
6	127115	HEMI RECEIVER ASSM ELR ALR L	Left
7	127129	ANGLE STOP ELR	
8	107350	SHCS 1/4-28 x 1/2	
9	106935	1/4-28 NYLOCK NUT THIN BLK ZN	
10	108623	BHCS 1/4-28 x 1-1/2	
11	106964	BHCS 1/4-28 X 2	

Pos.	Item Number	Description	Remarks
12	561086	1" HALF SADDLE 1/4" HOLE	
13	113268	WASHER NYLON 1IN OD X .312 ID	
14	106943	WASHER FLAT AN 1/4 ROHS	
15	113282	WASHER FLAT AN #10 ROHS	
16	119495	EXTENSION CLAMP KIT	
17	010615	SQUARE END CAP CNTR LEG	
18	226217	5/16-18 X 2" BH C/S BLK	
19	561062	1" INSERT PLUG .065 RIBS	
20	226057	BHCS 10-24 X .725 PL	
22	561197	PLASTIC PIVOT SADDLE	
23	202102	5/16-18 NYLOCK NUT THIN	
25,26	881500	LATCH BLOCK ASSM R	Right
25,26	881501	LATCH BLOCK ASSM L	Left
20,21,24-26	881521	S/A LATCH KIT CASTING RIGHT	Right
20,21,24-26	881522	S/A LATCH KIT CASTING LEFT	Left
27	107491	LATCH STUD KIT	order qty 2 when retro-fitting to chair
		Ship assembled part #	Use with multiple assemblies
	ASSY-HNG-FP	HANGER/FOOTPLATE ASSY REQUIRED	add with Hanger & Footplate kit

ELR & ALR CALF PAD 14 -15"

[07/2017]

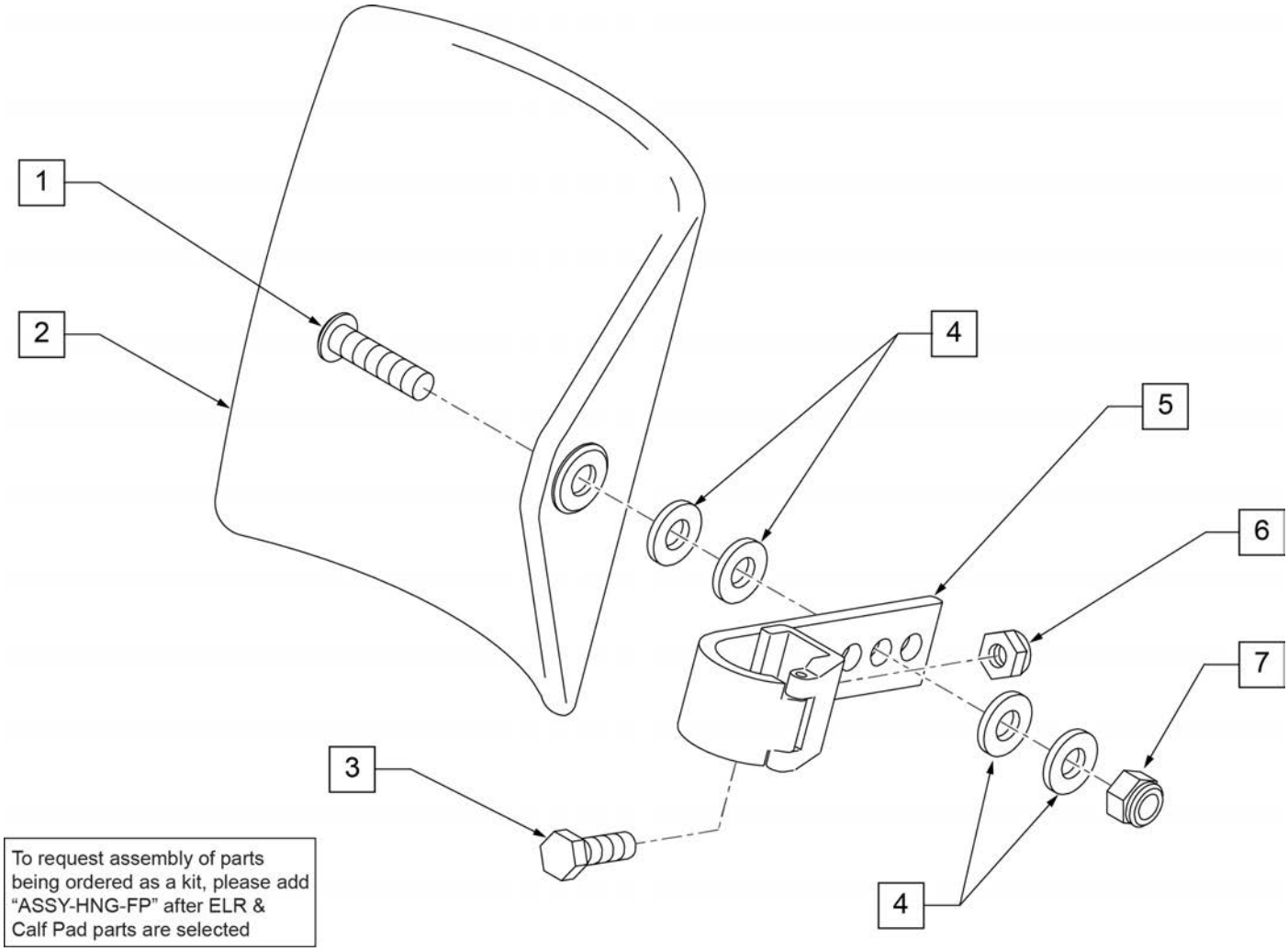

Pos.	Item Number	Description	Remarks
1	106980	BHCS 5/16-18 X 1-1/4 ROHS	
2	755014	CALF PAD TROUGH STYLE 14"/16"	
3	221097	1/4-28 X 5/8 HEX C/S BZ	
4	561016	1" WASHER 5/16" HOLE	
5	881413	CALF PAD BRACKET ASSEMBLY	
6	106934	NUT NYLOCK 1/4-28 ROHS	
7	106937	NUT NYLOCK THIN 5/16-18	
1-7	881414	CALF PAD J-HOOK 14"-15" ASSEMBLY	
		Ship assembled part #	Use with multiple assemblies
	ASSY-HNG-FP	HANGER/FOOTPLATE ASSY REQUIRED	add with Hanger & Footplate kit

ELR & ALR CALF PAD 16-20"

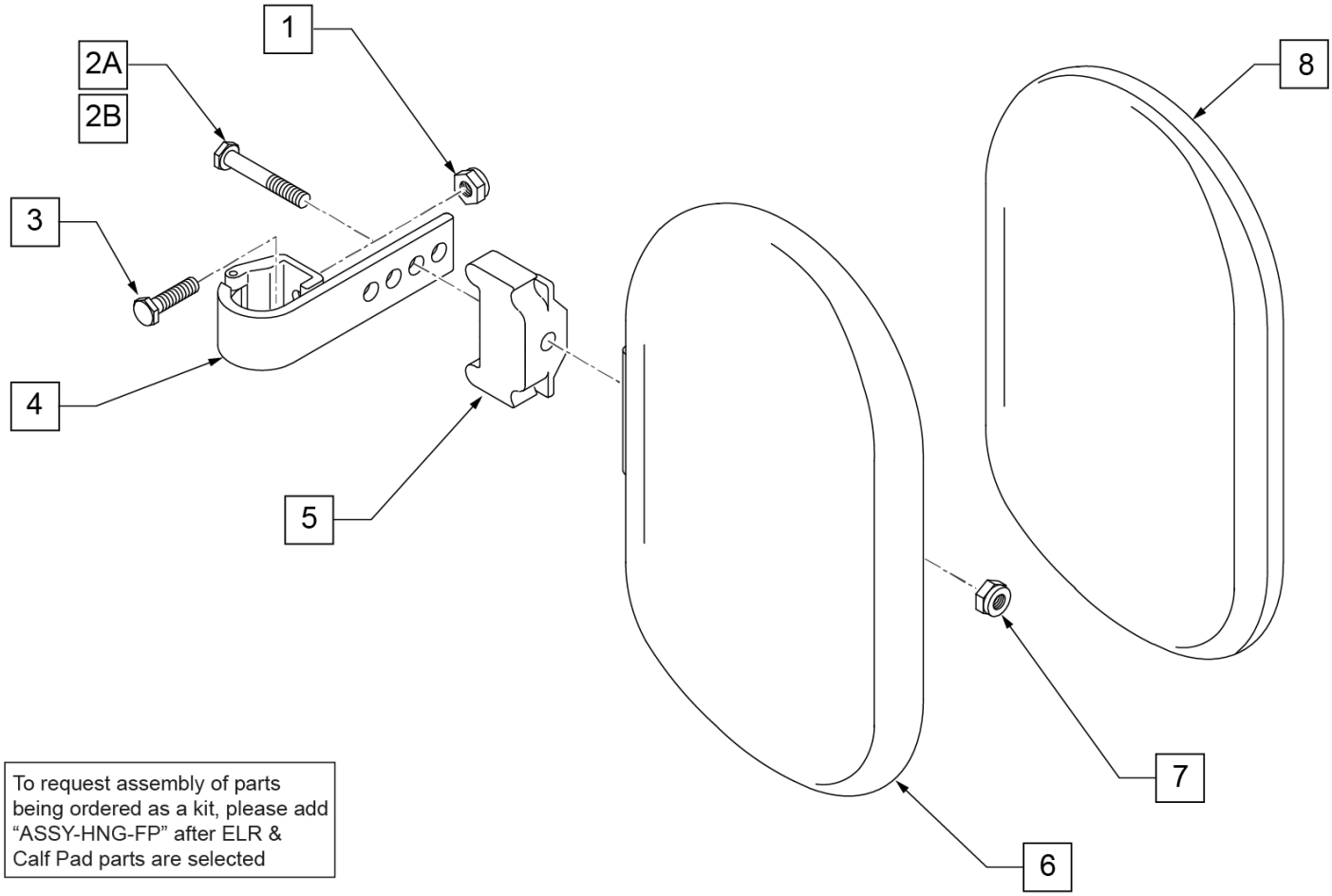

To request assembly of parts being ordered as a kit, please add "ASSY-HNG-FP" after ELR & Calf Pad parts are selected

Pos.	Item Number	Description	Remarks
1	106934	NUT NYLOCK 1/4-28 ROHS	
2A	107018	HHCS 5/16-18 X 2-1/2 ROHS	16"-17" wide only
2B	107019	HHCS 5/16-18 X 3-1/2 ROHS	18"-20" wide only
3	107013	HHCS 1/4-28 X 5/8 ROHS	
4	881413	CALF PAD BRACKET ASSEMBLY	
5	560199	ELR CALF HINGE SPACER	18"-20" wide only
6	560108	CALF PAD MOLDED 16"-20"	
7	106936	NUT NYLOCK 5/16-18 ROHS	
8	751045	CALF PAD COVER	
1,2A,3,4,6-8	881416	CALF MOLDED 16"-17" ASSEMBLY	
1,2B,3-7,8	881412	CALF PAD MOLDED 18"-20" ASSEMBLY	
		Ship assembled part #	Use with multiple assemblies
	ASSY-HNG-FP	HANGER/FOOTPLATE ASSY REQUIRED	add with Hanger & Footplate kit

ELR/ALR ALUMINUM FOOTPLATE

(02/11/2020)

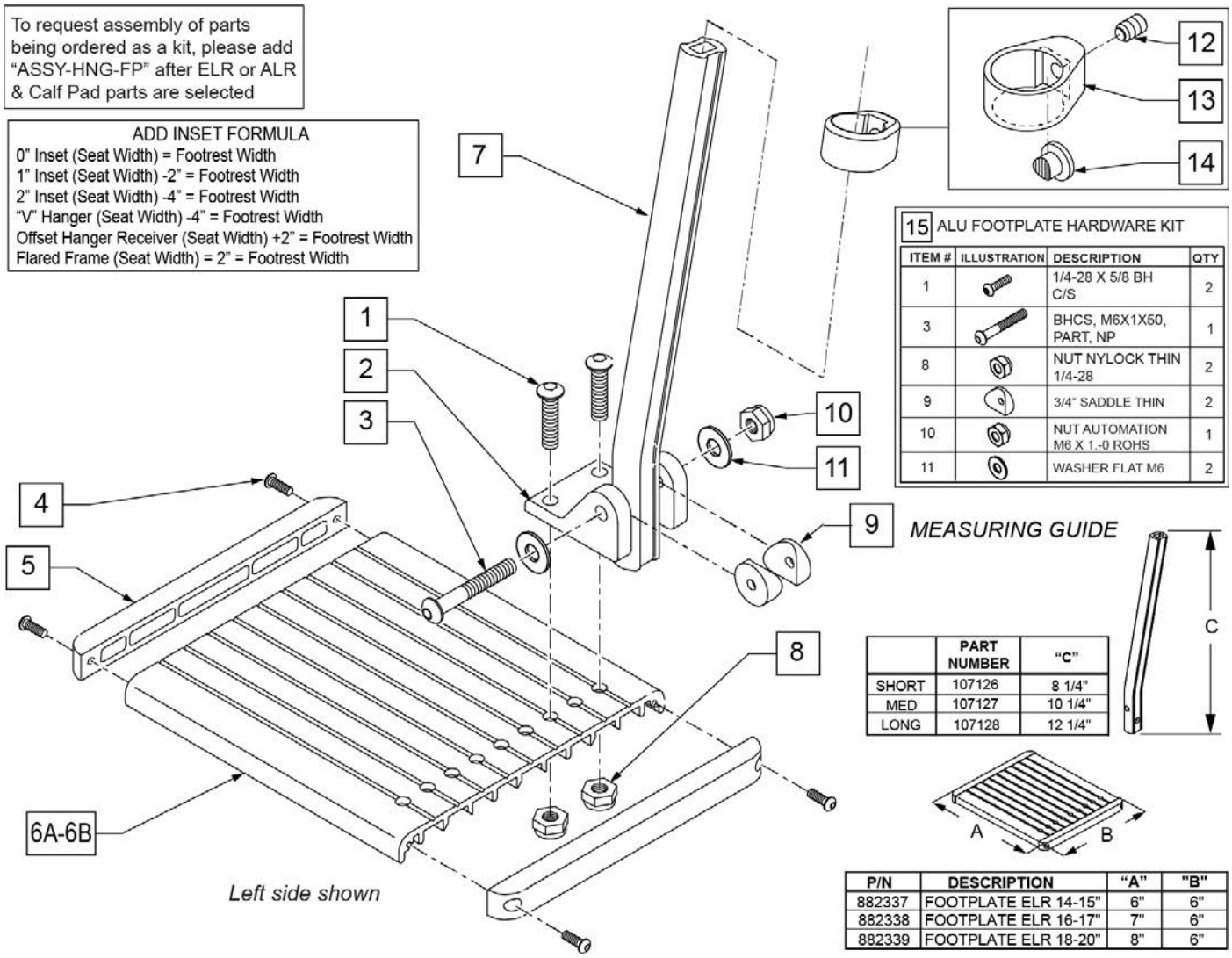

Pos.	Item Number	Description	Remarks
1	226090	1/4-28 x 5/8 BH C/S	
2	118093	BRACKET FOOTPLATE ALUM	
3	102262-008	BHCS M6 X 1 X 50 INORGANIC	
4	281043	#4 x 5/8 PAN PHIL S/TAP	
5	560101	END CAPS FOOTREST	
7	107126	SHORT BENT	
7	107127	MED BENT	
7	107128	LONG BENT	
7	128078	TUBE FOOTREST EXT SHT HEMI	Use for Hemi Extension option
8	106935	1/4-28 NYLOCK NUT THIN	
9	561003	3/4" SADDLE THIN	
10	132626	NUT AUTOMATION M6 X 1.0	
11	107383	WASHER FLAT M6 ROHS	
4,5,6A	882337	ELR FOOTPLATE ASSEMBLY 14 -15"	
4,5,6B	882338	ELR FOOTPLATE ASSEMBLY 16 -17"	
4,5,6C	882339	ELR FOOTPLATE ASSEMBLY 18 -20"	
12-14	119495	EXTENSION CLAMP KIT	
15	129775	ALU FOOTPLATE HDWARE KIT	Ext tube not included; bracket (118093) not included

Pos.	Item Number	Description	Remarks
		Ship assembled part #	Use with multiple assemblies
	ASSY-HNG-FP	HANGER/FOOTPLATE ASSY REQUIRED	add with Hanger & Footplate kit

Note: Footplate Assemblies are set to footrest width; please see "Footplate Formula" table for seat width conversion.

Note: If using Short Ext Tube & Hemi Hanger with Adult Angle Adjustable Footplate use 1D (straight) .

Note: V Style Hangers are not available on Swing Away Style chairs effective 7/14/14; see the "Prior To" ordering guide for V Style footplate assemblies.

Note: for QX Series or SR45 footplate replacement parts see the ordering guide marked specifically for these two models in the informations panel.

Note: if chair has High Mount Ext Tubes or if switching to High Mount Ext Tubes, see AAA Footplate w/ High Mount Extension Ordering Guide.

[02/19/2020]

To have complete Footrest ship assembled, choose compatible Hanger + Footplate part numbers and add "ASSY-HNG-FP" to order

ADD INSET FORMULA
0" Inset (Seat Width) = Footrest Width
1" Inset (Seat Width) -2" = Footrest Width
2" Inset (Seat Width) -4" = Footrest Width
"V" Hanger (Seat Width) -4" = Footrest Width
Offset Hanger Receiver (Seat Width) +2" = Footrest Width
Flared Frame (Seat Width) = 2" = Footrest Width

MEASURING GUIDE

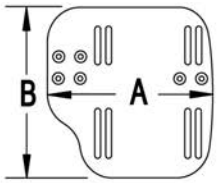

CHAIR WIDTH	"A"	"B"
10" - 11"	3 1/2"	7 1/4"
12" - 13"	4 1/2"	7 3/4"
14" - 15"	5 1/2"	7 3/4"
16" - 17"	6 1/2"	7 3/4"
18" - 20"	7 1/2"	7 3/4"

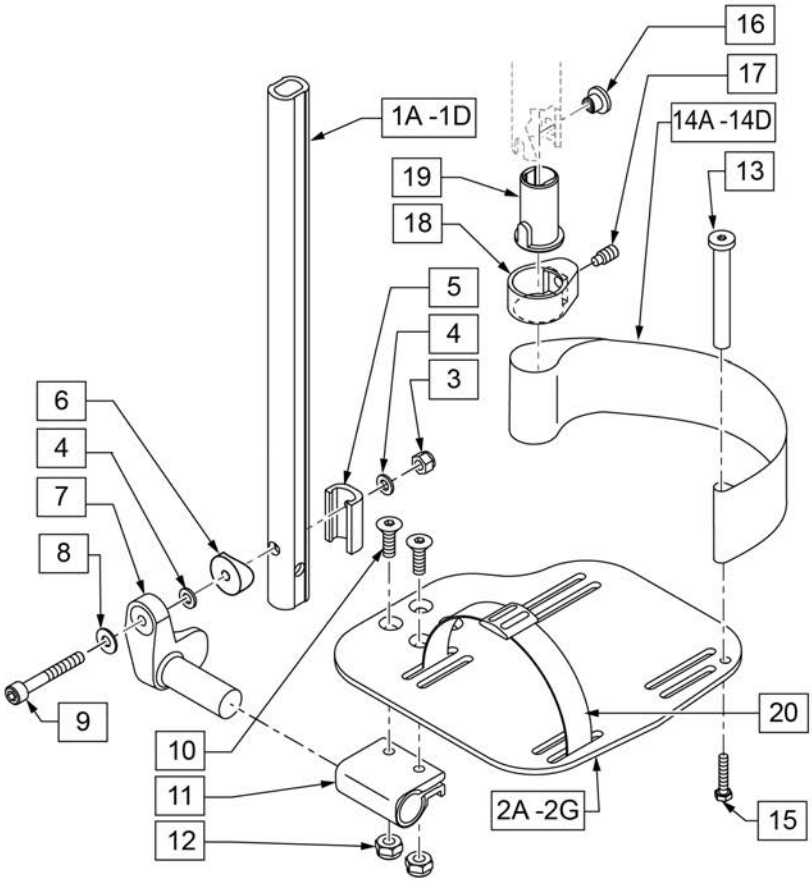

21 EXT MNT HARDWARE 1 SIDE

ITEM #	ILLUSTRATION	DESCRIPTION	QTY
3		NUT AUTOMATION M6 X 1.0 ROHS	1
4		WASHER FLAT THIN AN 1/4	2
5		HANGER EXTENSION SADDLE	1
6		3/4" SADDLE 1" OD	1
8		WASHER FLAT SAE 1/4 ROHS	1
9		SHCS M6X1X45 12MM PART THD	1

Pos.	Item Number	Description	Remarks
1A,3-6,8,9	120670	SHT STRT EXT AAA HDWR	
1B,3-6,8,9	120671	MED STRT EXT AAA HDWR	
1C,3-6,8,9	120672	LNG STRT EXT AAA HDWR	
1D	128079	TUBE FTRST EXT STRGHT SHT HEMI	Use for Hemi Ext Tube option
2A	500656	ADULT ANG ADJ F/PLT 10/11" R	RIGHT 10-11" Footrest Width
2A	500657	ADULT ANG ADJ F/PLT 10/11" L	LEFT 10-11" Footrest Width
2B	500658	ADULT ANG ADJ F/PLT 12/13" R	RIGHT 12-13" Footrest Width
2B	500659	ADULT ANG ADJ F/PLT 12/13" L	LEFT 12-13" Footrest Width
2C	500660	ADLT ANGL ADJ F/PLT 14/15	RIGHT 14-15" Footrest Width
2C	500661	ADLT ANGL ADJ F/PLT 14/15	LEFT 14-15" Footrest Width
2D	500662	ADLT ANGL ADJ F/PLT 16/17	RIGHT 16-17" Footrest Width
2D	500663	ADLT ANGL ADJ F/PLT 16/17	LEFT 16-17" Footrest Width
2E	500664	ADLT ANGL ADJ F/PLT 18-20	RIGHT 18-22" Footrest Width
2E	500665	ADLT ANGL ADJ F/PLT 18-20	LEFT 18-22" Footrest Width
3	132626	NUT AUTOMATION M6 X 1.0	
4	106944	WASHER FLAT THIN AN 1/4 ROHS	
5	107199	HANGER EXTENSION SADDLE	
6	561055	3/4" SADDLE 1" OD	
7	541002	FTRST MOUNTING BRKT-3/8 RAD R	RIGHT

Pos.	Item Number	Description	Remarks
7	541003	FTRST MOUNTING BRKT-3/8 RAD L	LEFT
8	106945	WASHER FLAT SAE 1/4 ROHS	
9	104399	SHCS M6X1X45 12 MM PART THD	
10	106978	FHCS 1/4-28 X 7/8 ROHS	
11	550350	3/4" CLMP ADJ FT PLT	
12	106935	NUT NYLOCK THIN 1/4-28 ROHS	
13	104328	POST HEEL LOOP	
14A	104380-001	ADJUSTABLE FOOT REST STRAP	12 - 14" WIDE
14B	104380-002	ADJUSTABLE FOOT REST STRAP	15 - 16" WIDE
14C	104380-003	ADJUSTABLE FOOT REST STRAP	17 - 18" WIDE
14D	104380-004	ADJUSTABLE FOOT REST STRAP	19 - 20" WIDE
15	102268-001	HHCS M6 X 1 X 25	
16-19	107485	FOOTREST CLAMP ASSM	
20	740260	TOE-ANKLE STRAP ADJ ADULT FOOTPLATE	
21	120659	EXT MNT HARDWARE 1 SIDE	
>>>>		60,70,80 STD HANGERS - RIGHT	
1A,2B,3-14A,15	111534	AAA STRT SHT EXT ASM 12-13" W R	Right- 12-13" W- SHORT
1A,2C,3-14B,15	107928	AAA STRT SHT EXT ASM 14-15" W R	Right- 14-15" W- SHORT
1A,2D,3-14C,15	107930	AAA STRT SHT EXT ASM 16-17" W R	Right- 16-17" W- SHORT
1A,2E,3-14D,15	107932	AAA STRT SHT EXT ASM 18-22" W R	Right- 18-22" W- SHORT
>>>>		60,70,80 STD HANGERS - LEFT	
1A,2B,3-14A,15	111535	AAA STRT SHT EXT ASM 12-13" W L	Left- 12-13" W- SHORT
1A,2C,3-14B,15	107935	AAA STRT SHT EXT ASM 14" W L	Left- 14-15" W- SHORT
1A,2D,3-14C,15	107937	AAA STRT SHT EXT ASM 16" W L	Left- 16-17" W- SHORT
1A,2E,3-14D,15	107939	AAA STRT SHT EXT ASM 18" W L	Left- 18-22" W- SHORT
>>>>		60,70,80 & 60,70 HEMI HANGERS - RIGHT	
1B,2B,3-14A,15	111536	AAA STRT MED EXT ASM 12-13" W R	Right- 12-13" W- MED
1B,2C,3-14B,15	107942	AAA STRT MED EXT ASM 14-15" W R	Right- 14-15" W- MED
1B,2D,3-14C,15	107944	AAA STRT MED EXT ASM 16-17" W R	Right- 16-17" W- MED
1B,2E,3-14D,15	107946	AAA STRT MED EXT ASM 18-22" W R	Right- 18-22" W- MED
>>>>		60,70,80 & 60,70 HEMI HANGERS - LEFT	
1B,2B,3-14A,15	111537	AAA STRT MED EXT ASM 12-13" W L	Left- 12-13" W- MED
1B,2C,3-14B,15	107949	AAA STRT MED EXT ASM 14" W L	Left- 14-15" W- MED
1B,2D,3-14C,15	107951	AAA STRT MED EXT ASM 16" W L	Left- 16-17" W- MED
1B,2E,3-14D,15	107953	AAA STRT MED EXT ASM 18" W L	Left- 18-22" W- MED
>>>>		60,70,80 & 60,70 HEMI HANGERS - RIGHT	
1C,2B,3-14A,15	111538	AAA STRT LNG EXT ASM 12-13" W R	Right- 12-13" W- LONG
1C,2C,3-14B,15	107956	AAA STRT LNG EXT ASM 14 -15" W R	Right- 14-15" W- LONG
1C,2D,3-14C,15	107958	AAA STRT LNG EXT ASM 16 -17" W R	Right- 16-17" W- LONG
1C,2E,3-14D,15	107960	AAA STRT LNG EXT ASM 18 -22" W R	Right- 18-22" W- LONG
>>>>		60,70,80 & 60,70 HEMI HANGERS - LEFT	
1C,2B,3-14A,15	111539	AAA STRT LNG EXT ASM 12-13" W L	Left- 12-13" W- LONG
1C,2C,3-14B,15	107963	AAA STRT LNG EXT ASM 14W L	Left- 14-15" W- LONG
1C,2D,3-14C,15	107965	AAA STRT LNG EXT ASM 16W L	Left- 16-17" W- LONG
1C,2E,3-14D,15	107968	AAA STRT LNG EXT ASM 18W L	Left- 18-22" W- LONG
>>>>		60&70 HEMI HANGERS - SHORT EXT - RIGHT	
1D,2B,3-14A,15	129756	AAA FOOT KIT SHT HNGR 12W R	Right- 12-13" W- SHORT; add Ext behind the Hemi
1D,2C,3-14B,15	129758	AAA FOOT KIT SHT HNGR 14W R	Right- 14-15" W- SHORT; add Ext behind the Hemi
1D,2D,3-14C,15	129760	AAA FOOT KIT SHT HNGR 16W R	Right- 16-17" W- SHORT; add Ext behind the Hemi
1D,2E,3-14D,15	129762	AAA FOOT KIT SHT HNGR 18W R	Right- 18-22" W- SHORT; add Ext behind the Hemi
>>>>		60&70 HEMI HANGERS - SHORT EXT -LEFT	
1D,2B,3-14A,15	129757	AAA FOOT KIT SHT HNGR 12W L	Left- 12-13" W-SHORT; add Ext behind the Hemi
1D,2C,3-14B,15	129759	AAA FOOT KIT SHT HNGR 14W L	Left- 14-15" W- SHORT; add Ext behind the Hemi
1D,2D,3-14C,15	129761	AAA FOOT KIT SHT HNGR 16W L	Left- 16-17" W- SHORT; add Ext behind the Hemi
1D,2E,3-14D,15	129763	AAA FOOT KIT SHT HNGR 18W L	Left- 18-22" W- SHORT; add Ext behind the Hemi
		Ship assembled part #	Use with multiple assemblies

Pos.	Item Number	Description	Remarks
	ASSY-HNG-FP	HANGER/FOOTPLATE ASSY REQUIRED	add with Hanger & Footplate kit

COMPOSITE ANGLE ADJUSTABLE FOOT PLATE

[02/19/2020]

Note: Footplate Assemblies are set to footrest width; please see "Footplate Formula" table for seat width conversion.

Note: If using Short Ext Tube & Hemi Hanger with Composite Angle Adjustable Footplate use 1D (straight) .

Note: V Style Hangers are not available on Swing Away Style chairs effective 7/14/14; see the "Prior To" ordering guide for V Style footplate assemblies.

To have complete Footrest ship assembled, choose compatible Hanger + Footplate part numbers and add “ASSY-HNG-FP” to order

ADD INSET FORMULA
0” Inset (Seat Width) = Footrest Width
1” Inset (Seat Width) -2” = Footrest Width
2” Inset (Seat Width) -4” = Footrest Width
“V” Hanger (Seat Width) -4” = Footrest Width
Offset Hanger Receiver (Seat Width) +2” = Footrest Width
Flared Frame (Seat Width) = 2” = Footrest Width

FOOTPLATE MEASURING GUIDE

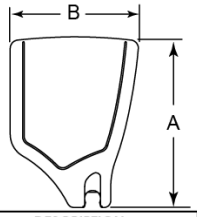

PART NO	DESCRIPTION	DIM -A-	DIM -B-
063216-006	FOOTPLATE COMPOSITE 157 R	6 1/8"	6"
063216-012	FOOTPLATE COMPOSITE 157 L	6 1/8"	6"
063216-015	FOOTPLATE COMPOSITE 170 R	6 5/8"	6"
063216-018	FOOTPLATE COMPOSITE 170 L	6 5/8"	6"
063216-005	FOOTPLATE COMPOSITE 182 R	7 1/8"	6"
063216-011	FOOTPLATE COMPOSITE 182 L	7 1/8"	6"
063216-014	FOOTPLATE COMPOSITE 195 R	7 5/8"	6"
063216-017	FOOTPLATE COMPOSITE 195 L	7 5/8"	6"
063216-004	FOOTPLATE COMPOSITE 207 R	8 1/8"	6"
063216-010	FOOTPLATE COMPOSITE 207 L	8 1/8"	6"
063216-013	FOOTPLATE COMPOSITE 220 R	8 5/8"	6 1/4"
063216-016	FOOTPLATE COMPOSITE 220 L	8 5/8"	6 1/4"
063216-003	FOOTPLATE COMPOSITE 232 R	9 1/8"	6 1/4"
063216-009	FOOTPLATE COMPOSITE 232 L	9 1/8"	6 1/4"
063216-002	FOOTPLATE COMPOSITE 257 R	10 1/8"	6 1/4"
063216-008	FOOTPLATE COMPOSITE 257 L	10 1/8"	6 1/4"
063216-001	FOOTPLATE COMPOSITE 282 R	11 1/8"	6 1/4"
063216-007	FOOTPLATE COMPOSITE 282 L	11 1/8"	6 1/4"

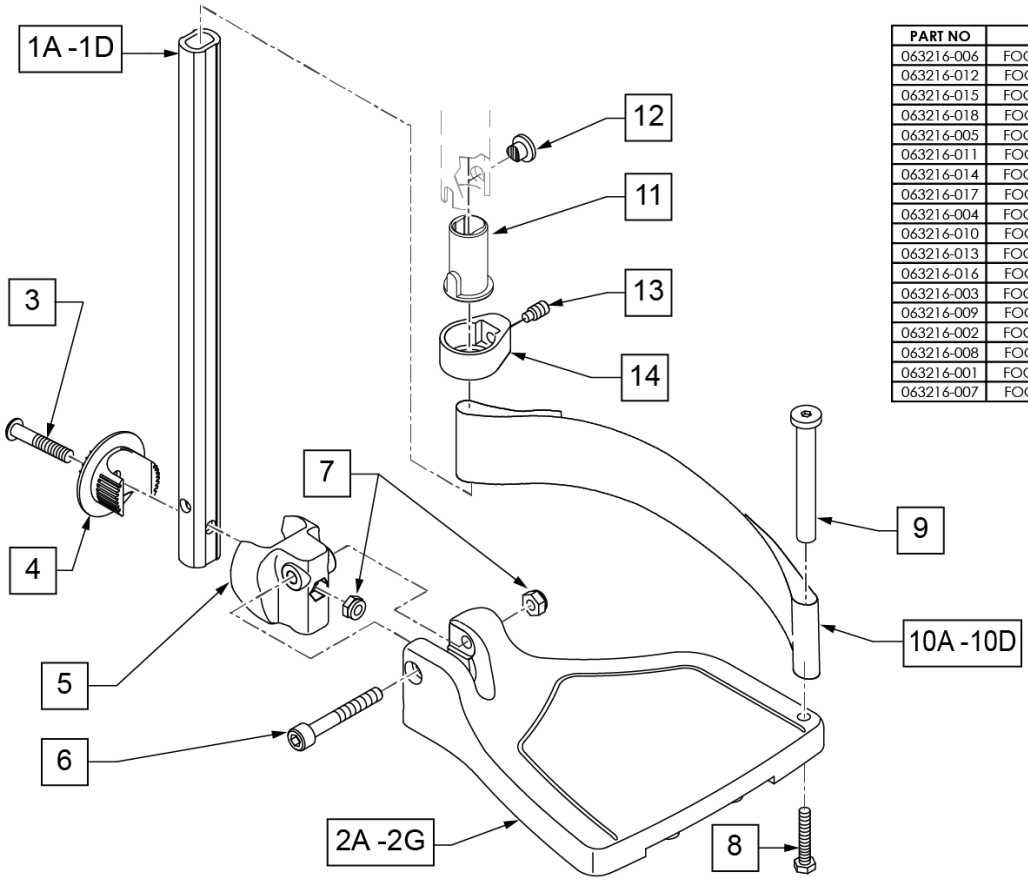

Pos.	Item Number	Description	Remarks
1A,6,7	120660	SHT STRT EXT COMP HDWR	
1B,6,7	120661	MED STRT EXT COMP HDWR	
1C,6,7	120662	LNG STRT EXT COMP HDWR	
1D	128079	TUBE FTRST EXT STRGHT SHT HEMI	Use for Hemi Ext Tube option
2A	063216-006	COMPOSITE FOOTPLATE RIGHT	RIGHT 15" Footrest Width

Pos.	Item Number	Description	Remarks
2A	063216-012	COMPOSITE FOOTPLATE LEFT	LEFT 15" Footrest Width
2B	063216-015	COMPOSITE FOOTPLATE RIGHT	RIGHT 16" Footrest Width
2B	063216-018	COMPOSITE FOOTPLATE LEFT	LEFT 16" Footrest Width
2C	063216-005	COMPOSITE FOOTPLATE RIGHT	RIGHT 17" Footrest Width
2C	063216-011	COMPOSITE FOOTPLATE LEFT	LEFT 17" Footrest Width
2D	063216-014	COMPOSITE FOOTPLATE RIGHT	RIGHT 18" Footrest Width
2D	063216-017	COMPOSITE FOOTPLATE LEFT	LEFT 18" Footrest Width
2E	063216-004	COMPOSITE FOOTPLATE RIGHT	RIGHT 19" Footrest Width
2E	063216-010	COMPOSITE FOOTPLATE LEFT	LEFT 19" Footrest Width
2F	063216-013	COMPOSITE FOOTPLATE RIGHT	RIGHT 20" Footrest Width
2F	063216-016	COMPOSITE FOOTPLATE LEFT	LEFT 20" Footrest Width
2G	063216-003	COMPOSITE FOOTPLATE RIGHT	RIGHT 21" & 22" Footrest Width
2G	063216-009	COMPOSITE FOOTPLATE LEFT	LEFT 21" & 22" Footrest Width
3	108233	BHCS M6 X 1 X 40	
4	054242	ANGLE COVER	
5	054241	ANGLE SEGMENT	
6	103175	SHCS M6 X 1 X 40 INORG	
7	132626	NUT AUTOMATION M6 X 1.0	
8	102268-001	HHCS M6X1X25	Inserted in bottom of footplate.
9	104328	HEEL LOOP PEG	
10A	104380-001	ADJUSTABLE FOOT REST STRAP	15" Footrest Width
10B	104380-002	ADJUSTABLE FOOT REST STRAP	16" Footrest Width
10C	104380-003	ADJUSTABLE FOOT REST STRAP	17-18" Footrest Width
10D	104380-004	ADJUSTABLE FOOT REST STRAP	19-22" Footrest Width
11	104160	BUSHING FOOTREST	
11-14	107485	FOOTREST CLAMP ASSM	
>>>>		60,70,80 HANGERS - SHORT EXT - RIGHT	
1A,2A,3-10A	107816	CAA STRT SHT EXT ASM 15W R	Right- 15 W- SHORT
1A,2B,3-10B	107817	CAA STRT SHT EXT ASM 16W R	Right- 16 W- SHORT
1A,2C,3-10B	107818	CAA STRT SHT EXT ASM 17W R	Right- 17 W- SHORT
1A,2D,3-10C	107819	CAA STRT SHT EXT ASM 18W R	Right- 18 W- SHORT
1A,2E,3-10C	107820	CAA STRT SHT EXT ASM 19W R	Right- 19 W- SHORT
1A,2F,3-10D	107821	CAA STRT SHT EXT ASM 20W R	Right- 20 W- SHORT
1A,2G,3-10D	107822	CAA STRT SHT EXT ASM 21&22W R	Right- 21&22 W- SHORT
>>>>		60,70,80 HANGERS - SHORT EXT - LEFT	
1A,2A,3-10A	107823	CAA STRT SHT EXT ASM 15W L	Left- 15 W- SHORT
1A,2B,3-10B	107824	CAA STRT SHT EXT ASM 16W L	Left- 16 W- SHORT
1A,2C,3-10B	107825	CAA STRT SHT EXT ASM 17W L	Left- 17 W- SHORT
1A,2D,3-10C	107826	CAA STRT SHT EXT ASM 18W L	Left- 18 W- SHORT
1A,2E,3-10C	107827	CAA STRT SHT EXT ASM 19W L	Left- 19 W- SHORT
1A,2F,3-10D	107828	CAA STRT SHT EXT ASM 20W L	Left- 20 W- SHORT
1A,2G,3-10D	107829	CAA STRT SHT EXT ASM 21&22W L	Left- 21&22 W- SHORT
>>>>		60,70,80& 60,70 HEMI HANGER- RIGHT	
1B,2A,3-10A	107830	CAA STRT MED EXT ASM 15W R	Right- 15 W- MED
1B,2B,3-10B	107831	CAA STRT MED EXT ASM 16W R	Right- 16 W- MED
1B,2C,3-10B	107832	CAA STRT MED EXT ASM 17W R	Right- 17 W- MED
1B,2D,3-10C	107833	CAA STRT MED EXT ASM 18W R	Right- 18 W- MED
1B,2E,3-10C	107834	CAA STRT MED EXT ASM 19W R	Right- 19 W- MED
1B,2F,3-10D	107835	CAA STRT MED EXT ASM 20W R	Right- 20 W- MED
1B,2G,3-10D	107836	CAA STRT MED EXT ASM 21&22W R	Right- 21&22 W- MED
>>>>		60,70,80& 60,70 HEMI HANGER- LEFT	
1B,2A,3-10A	107837	CAA STRT MED EXT ASM 15W L	Left- 15 W- MED
1B,2B,3-10B	107838	CAA STRT MED EXT ASM 16W L	Left- 16 W- MED
1B,2C,3-10B	107839	CAA STRT MED EXT ASM 17W L	Left- 17 W- MED
1B,2D,3-10C	107840	CAA STRT MED EXT ASM 18W L	Left- 18 W- MED
1B,2E,3-10C	107841	CAA STRT MED EXT ASM 19W L	Left- 19 W- MED

Pos.	Item Number	Description	Remarks
1B,2F,3-10D	107842	CAA STRT MED EXT ASM 20W L	Left- 20 W- MED
1B,2G,3-10D	107843	CAA STRT MED EXT ASM 21&22W L	Left- 21&22 W- MED
>>>>		60,70,80& 60,70 HEMI HANGER- RIGHT	
1C,2A,3-10A	107844	CAA STRT LNG EXT ASM 15W R	Right- 15 W- LONG
1C,2B,3-10B	107845	CAA STRT LNG EXT ASM 16W R	Right- 16 W- LONG
1C,2C,3-10B	107846	CAA STRT LNG EXT ASM 17W R	Right- 17 W- LONG
1C,2D,3-10C	107847	CAA STRT LNG EXT ASM 18W R	Right- 18 W- LONG
1C,2E,3-10C	107848	CAA STRT LNG EXT ASM 19W R	Right- 19 W- LONG
1C,2F,3-10D	107849	CAA STRT LNG EXT ASM 20W R	Right- 20 W- LONG
1C,2G,3-10D	107850	CAA STRT LNG EXT ASM 21&22W R	Right- 21&22 W- LONG
>>>>		60,70,80& 60,70 HEMI HANGER- LEFT	
1C,2A,3-10A	107851	CAA STRT LNG EXT ASM 15W L	Left- 15 W- LONG
1C,2B,3-10B	107852	CAA STRT LNG EXT ASM 16W L	Left- 16 W- LONG
1C,2C,3-10B	107853	CAA STRT LNG EXT ASM 17W L	Left- 17 W- LONG
1C,2D,3-10C	107854	CAA STRT LNG EXT ASM 18W L	Left- 18 W- LONG
1C,2E,3-10C	107855	CAA STRT LNG EXT ASM 19W L	Left- 19 W- LONG
1C,2F,3-10D	107856	CAA STRT LNG EXT ASM 20W L	Left- 20 W- LONG
1C,2G,3-10D	107857	CAA STRT LNG EXT ASM 21&22W L	Left- 21&22 W- LONG
>>>>		60&70 HEMI HANGERS- SHORT EXT- RIGHT	
1D,2A,3-10A	129710	CAA FOOT KIT SHT HNGR 15W R	Right-Hemi-15W; add Ext behind the Hemi
1D,2B,3-10B	129712	CAA FOOT KIT SHT HNGR 16W R	Right-Hemi-16W; add Ext behind the Hemi
1D,2C,3-10B	129714	CAA FOOT KIT SHT HNGR 17W R	Right-Hemi-17W; add Ext behind the Hemi
1D,2D,3-10C	129716	CAA FOOT KIT SHT HNGR 18W R	Right-Hemi-18W; add Ext behind the Hemi
1D,2E,3-10C	129718	CAA FOOT KIT SHT HNGR 19W R	Right-Hemi-19W; add Ext behind the Hemi
1D,2F,3-10D	129720	CAA FOOT KIT SHT HNGR 20W R	Right-Hemi-20W; add Ext behind the Hemi
1D,2G,3-10D	129722	CAA FOOT KIT SHT HNGR 22W R	Right-Hemi-21&22W; add Ext behind the Hemi
>>>>		60&70 HEMI HANGERS- SHORT EXT - LEFT	
1D,2A,3-10A	129711	CAA FOOT KIT SHT HNGR 15W L	Left-Hemi-15W; add Ext behind the Hemi
1D,2B,3-10B	129713	CAA FOOT KIT SHT HNGR 16W L	Left-Hemi-16W; add Ext behind the Hemi
1D,2C,3-10B	129715	CAA FOOT KIT SHT HNGR 17W L	Left-Hemi-17W; add Ext behind the Hemi
1D,2D,3-10C	129717	CAA FOOT KIT SHT HNGR 18W L	Left-Hemi-18W; add Ext behind the Hemi
1D,2E,3-10C	129719	CAA FOOT KIT SHT HNGR 19W L	Left-Hemi-19W; add Ext behind the Hemi
1D,2F,3-10D	129721	CAA FOOT KIT SHT HNGR 20W L	Left-Hemi-20W; add Ext behind the Hemi
1D,2G,3-10D	129723	CAA FOOT KIT SHT HNGR 22W L	Left-Hemi-21&22W; add Ext behind the Hemi
		Ship assembled part #	Use with multiple assemblies
	ASSY-HNG-FP	HANGER/FOOTPLATE ASSY REQUIRED	add with Hanger & Footplate kit

ELR ALR KNUCKLE COVERS

Note: For installation instructions please see the informations section to the right of this parts page.

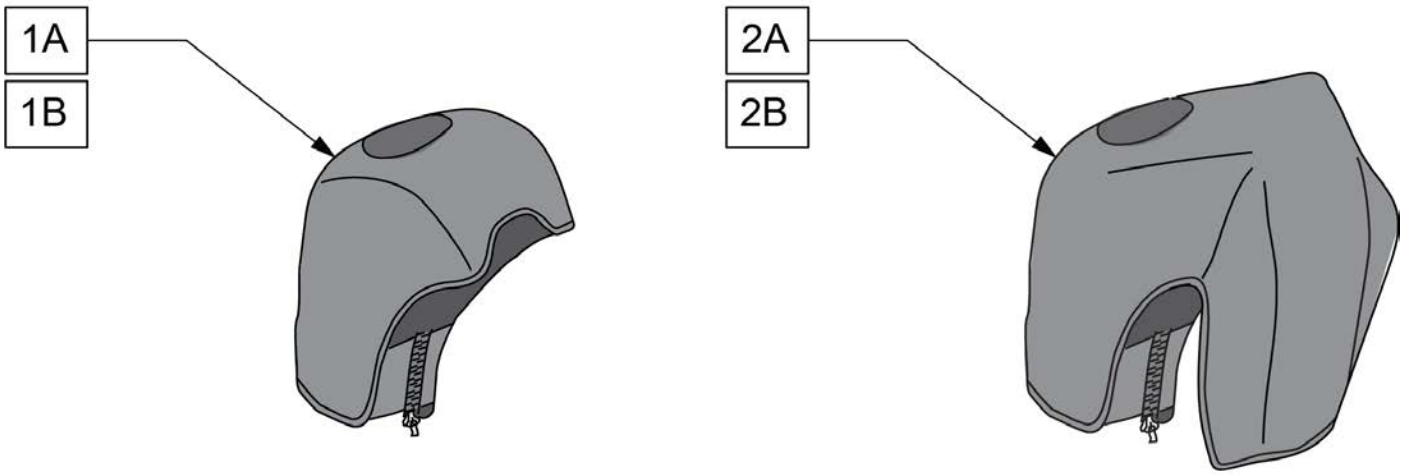

Pos.	Item Number	Description	Remarks
1A	163881	ELR NEOPRENE COVER PR	Pair
1B	163882	ELR GEL COVER PR	Pair
2A	163883	ALR NEOPRENE COVER PR	Pair
2B	163884	ALR GEL COVER PR	Pair

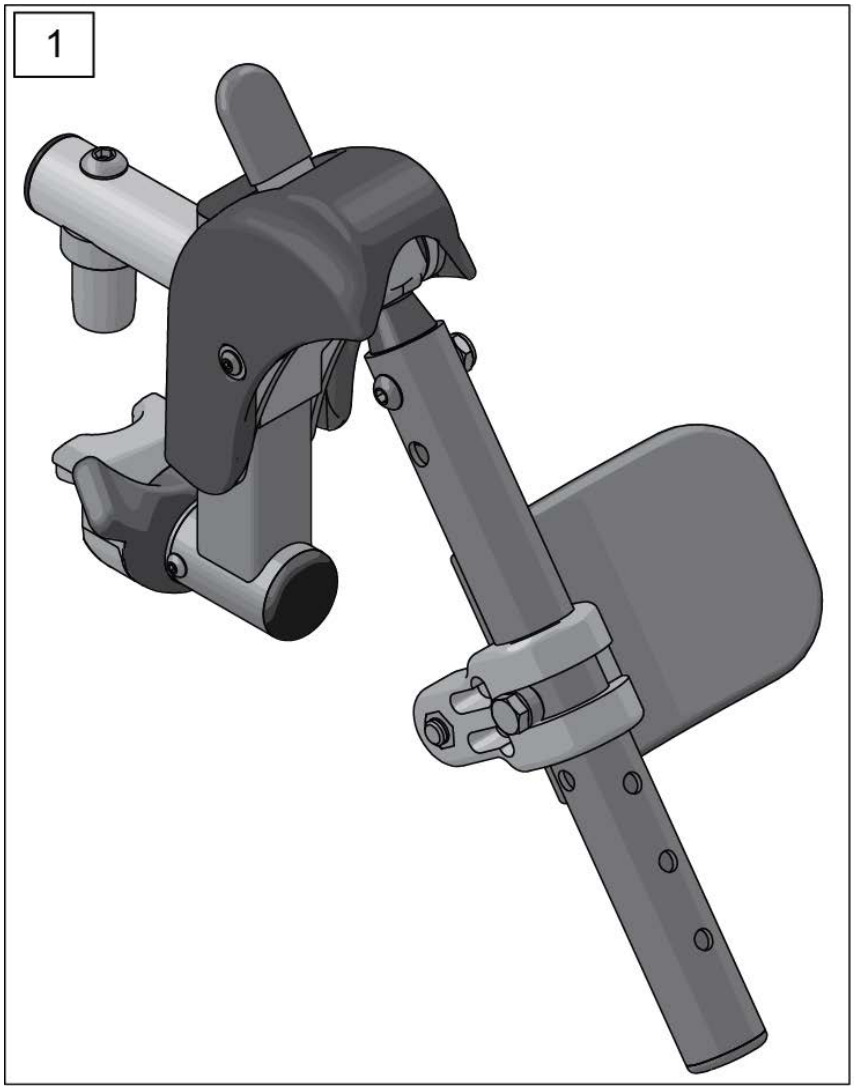

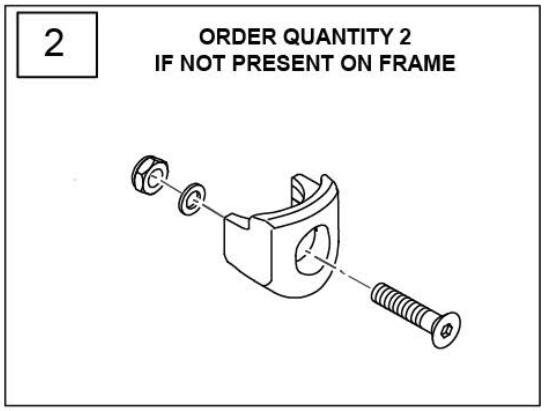

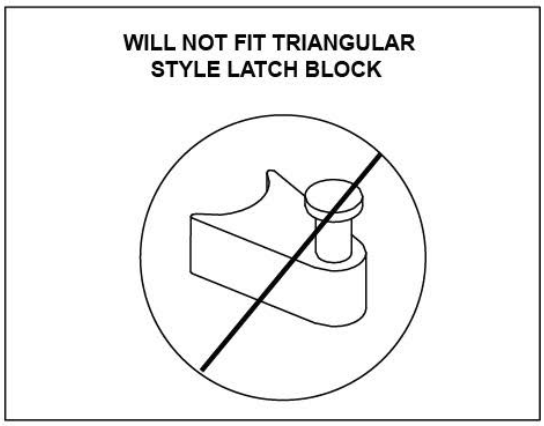

Pos.	Item Number	Description	Remarks
1	162048S	SWNG I/O ELR ASSM FM W/PAD	Kit includes both right & left sides with calf pads
2	119514	LATCH RECEIVER KIT	order qty 2 when retro-fitting to chair
		Ship assembled part #	Use with multiple assemblies
	ASSY-HNG-FP	HANGER/FOOTPLATE ASSY REQUIRED	add with Hanger & Footplate kit

SWING IN-OUT FRONT MOUNT ELR REPLACEMENT PARTS (PLUNGER STYLE) (EFFECTIVE 2/6/17)

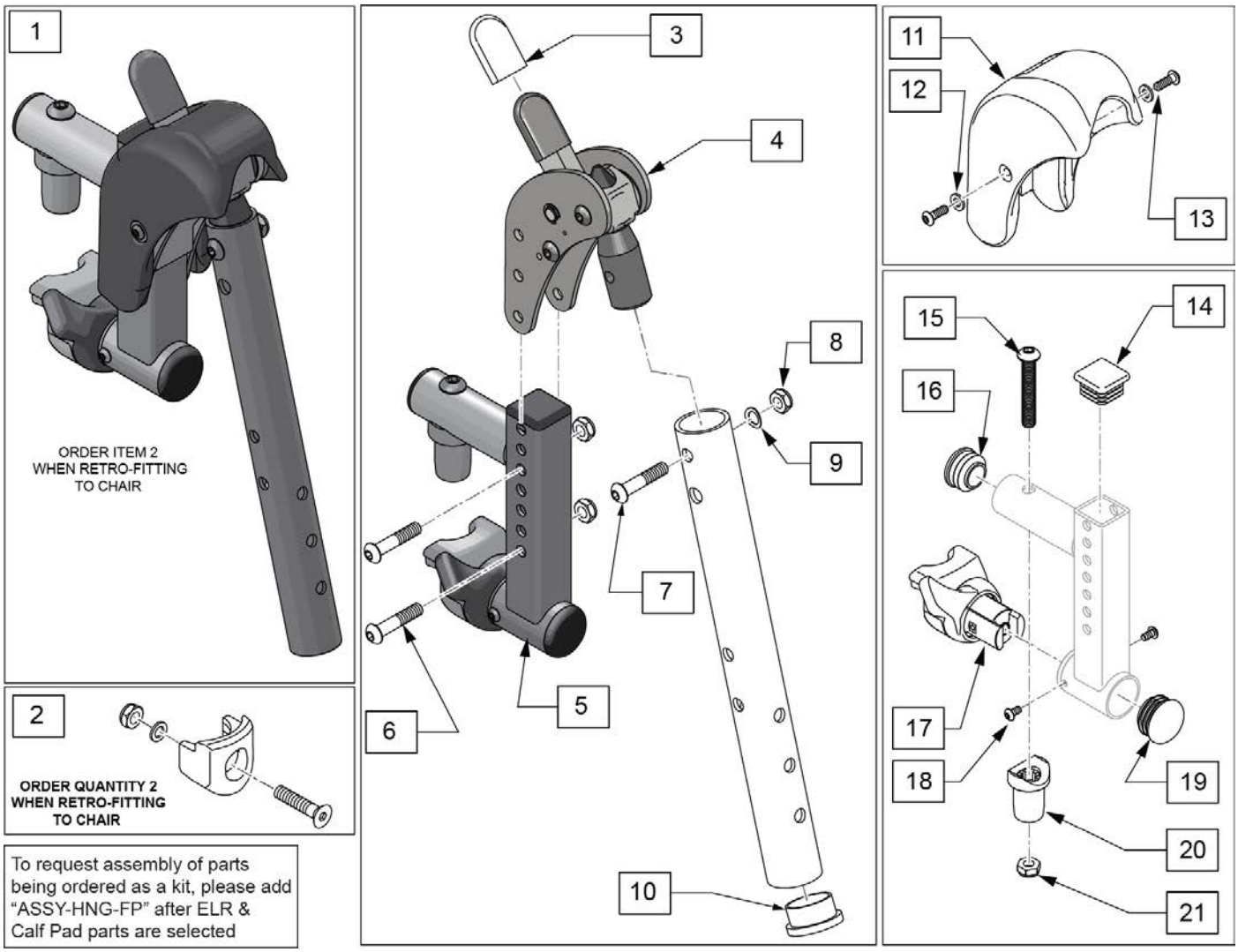

Pos.	Item Number	Description	Remarks
1	162049S	SWNG I/O ELR ASSM FM LH	Left
1	162050S	SWNG I/O ELR ASSM FM RH	Right
2	119514	LATCH RECEIVER KIT	order qty 2 when retro-fitting to chair
3	560501	ALR REL LEVER COVER	
4	126992	HEMI ELR SUB ASSM	
5	134188	RECEIVER ASSY ELR ALR RH	
5	134186	RECEIVER ASSY ELR ALR LH	
6	108623	BHCS 1/4-28 x 1-1/2	
7	106961	BHCS 1/4 -28 x 1 1/4 ROHS	
8	106935	1/4-28 NYLOCK NUT THIN BLK ZN	
9	104414	WAVE WASHER 6 MM	
10	561002	1" INSERT PLUG .083	
12	113282	WASHER FLAT AN #10 ROHS	
13	127135	BHCS 8-32 X 1/2 BLK	
11-13	129640	ELR SHROUD KIT	Kit w/ 2 screws
14	010615	SQUARE END CAP CNTR LEG	
15	226217	5/16-18 X 2" BH C/S BLK	
16	560110	ENDPLUG BACKREST TNT	

Pos.	Item Number	Description	Remarks
17,18	161243	ELR/ALR HANGER LATCH KIT LH	Left
17,18	161242	ELR/ALR HANGER LATCH KIT RH	Right
19	561062	1" INSERT PLUG .065 RIBS	
20	561197	PLASTIC PIVOT SADDLE	
21	202102	5/16-18 NYLOCK NUT THIN	
		Ship assembled part #	Use with multiple assemblies
	ASSY-HNG-FP	HANGER/FOOTPLATE ASSY REQUIRED	add with Hanger & Footplate kit

90 DEG ELEVATING CALF PAD

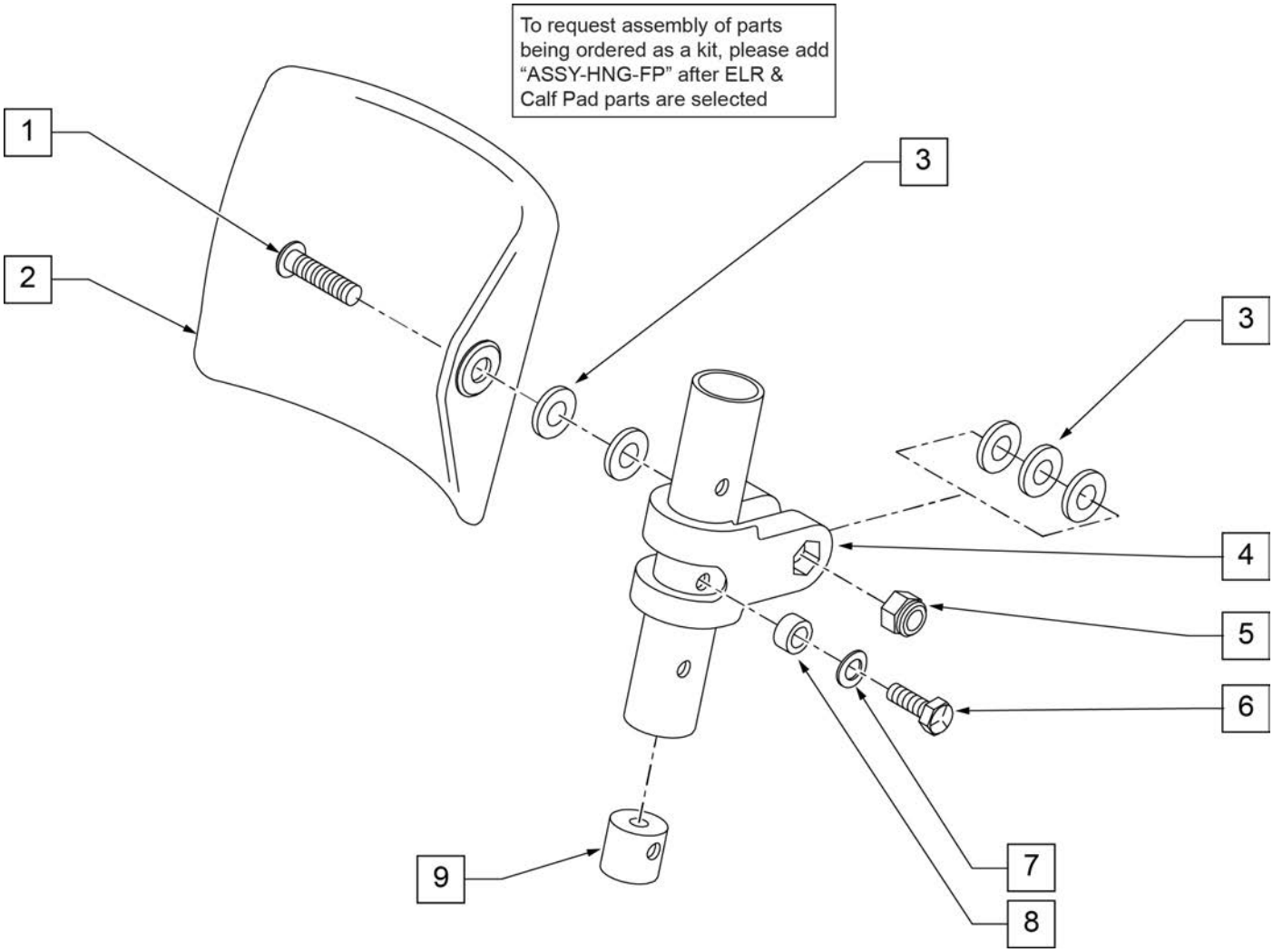

Pos.	Item Number	Description	Remarks
1	226217	5/16-18 x 2" BH C/S BLK	
2	755013	CALF PAD TROUGH STYLE KIDS	
3	561016	1" WASHER 5/16" HOLE	
4	561097	ELR ELEVATING TUBE CLAMP	
5	106937	5/16 -18 NYLOCK NUT THIN	
6	106958	HHCS 1/4-20 X 1 ROHS	
7	262130	6mm WASHER WAVE	
8	483027	1/4 x 1/4 ALUMINUM SPACER	
9	500151	KIDS ALR RETAINING PLUG	
1-9	880533	ELR TROUGH PAD ASSM KIDS	
		Ship assembled part #	Use with multiple assemblies
	ASSY-HNG-FP	HANGER/FOOTPLATE ASSY REQUIRED	add with Hanger & Footplate kit

FRONT MOUNT HANGER EXT

[02/2010]

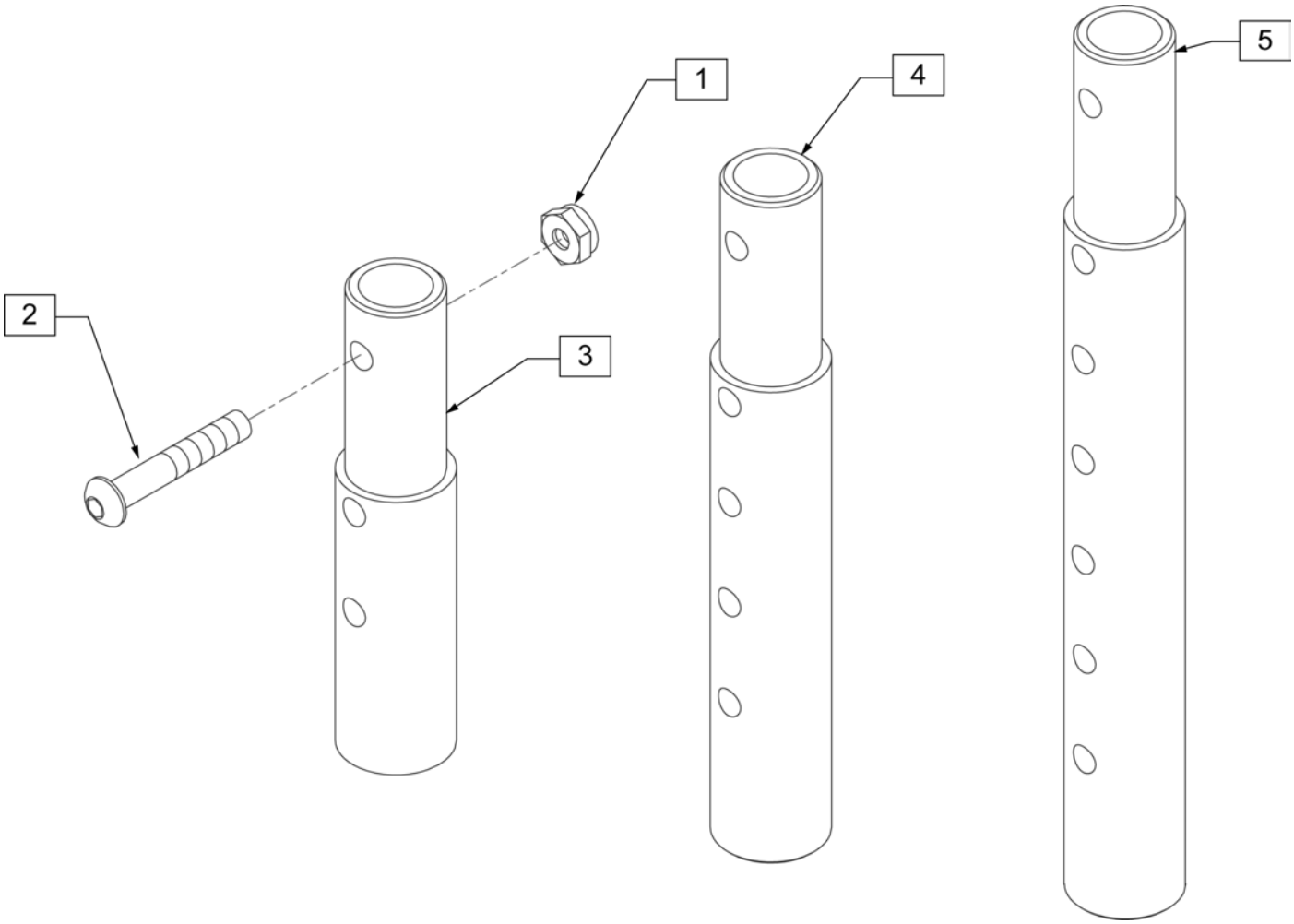

Pos.	Item Number	Description	Remarks
1	106935	NUT NYLOCK THIN 1/4 -28 ROHS	
2	106961	BHCS 1/4 -28 x 1 1/4 ROHS	
1-3	111505	2" FOOTREST EXTENSION TUBE W/ HDWR ASSM	2" EXT (PAIR)
1, 2, 4	111506	4" FOOTREST EXTENSION TUBE W/ HDWR ASSM	4" EXT (PAIR)
1, 2, 5	111507	6" FOOTREST EXTENSION TUBE W/ HDWR ASSM	6" EXT (PAIR)

ADULT ANGLE-ADJ FOOTPLATE FRONT MOUNT

To have complete Footrest ship assembled, choose compatible Hanger + Footplate part numbers and add "ASSY-HNG-FP" to order

INSET FORMULA

0" Inset (Seat Width) = Footrest Width
1" Inset (Seat Width) -2" = Footrest Width
"V" Hanger (Seat Width) -4" = Footrest Width
Offset Hanger Receiver (Seat Width) +2" = Footrest Width

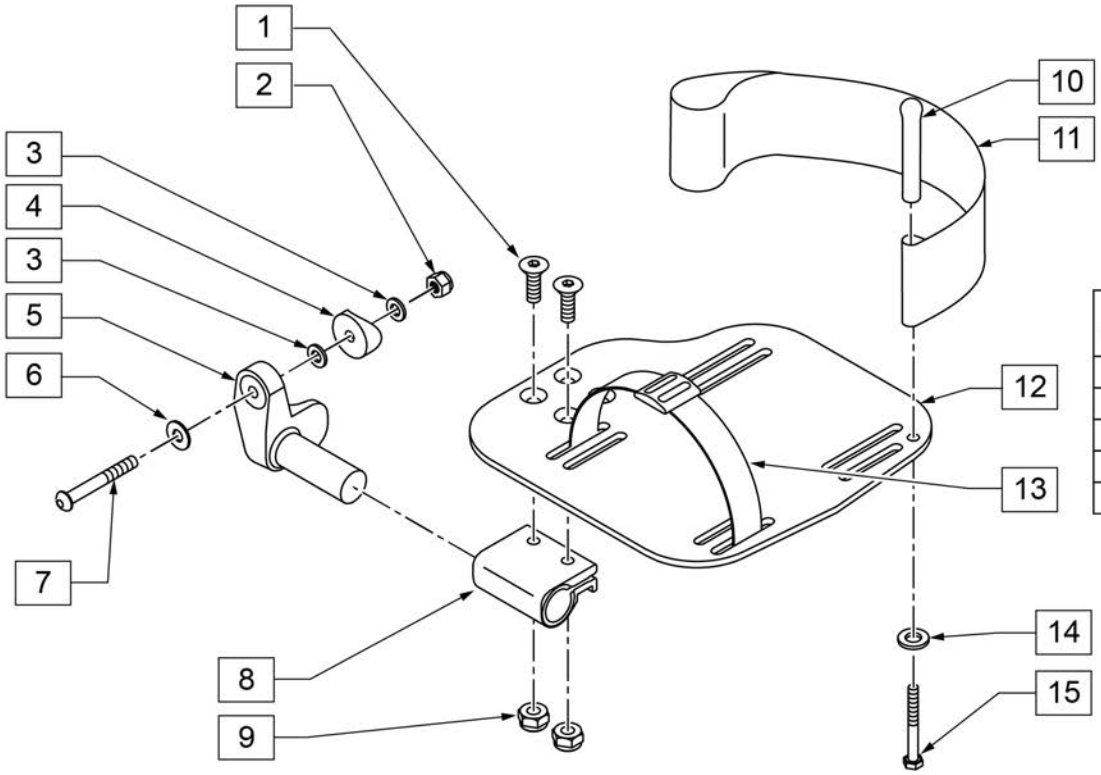

MEASURING GUIDE

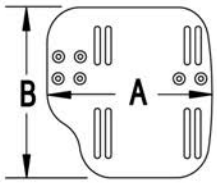

CHAIR WIDTH	"A"	"B"
10"-11"	3 1/2"	7 1/4"
12"-13"	4 1/2"	7 3/4"
14"-15"	5 1/2"	7 3/4"
16"-17"	6 1/2"	7 3/4"
18"-20"	7 1/2"	7 3/4"

Pos.	Item Number	Description	Remarks
1	106978	FHCS 1/4-28 X 7/8 ROHS	
2	106941	NUT AUTOMATION 1/4-28 ROHS	
3	106943	WASHER FLAT AN 1/4 ROHS	
4	561004	1" SADDLE 1/4" HOLE	
5	541000	FOOTREST MOUNTING BRKT 1/2" RAD R	RIGHT
5	541001	FOOTREST MOUNTING BRKT 1/2" RAD L	LEFT
6	106945	WASHER FLAT SAE 1/4 ROHS	
7	106964	BHCS 1/4-28 X 2	
8	550350	3/4" CLAMP ADJ FOOTPLATE	
9	106935	NUT NYLOCK THIN 1/4-28 ROHS	
10	561040	HEEL LOOP PEG	
11	741153	HEEL LOOP 18-20 CMPST/14-15 ANG ADJ	USED W/ 14-15"/16-17" ADULT ANG ADJ FTPLTS
11	741253	HEEL LOOP ADLT ADJ F/PLT 18-20	USED W/ 18 -20" ADULT ANG ADJ FTPLTS
12	500656	ADULT ANGL ADJ F/PLT 10/11	RIGHT
12	500657	ADULT ANGL ADJ F/PLT 10/11	LEFT
12	500658	ADULT ANGL ADJ F/PLT 12/13	RIGHT
12	500659	ADULT ANGL ADJ F/PLT 12/13	LEFT
12	500660	ADULT ANGL ADJ F/PLT 14/15	RIGHT
12	500661	ADULT ANGL ADJ F/PLT 14/15	LEFT
12	500662	ADULT ANGL ADJ F/PLT 16/17	RIGHT
12	500663	ADULT ANGL ADJ F/PLT 16/17	LEFT
12	500664	ADULT ANGL ADJ F/PLT 18-20	RIGHT

Pos.	Item Number	Description	Remarks
12	500665	ADULT ANGL ADJ F/PLT 18-20	LEFT
13	740260	TOE-ANKLE STRAP ADJ ADULT FOOTPLATE	
14	106943	WASHER FLAT AN 1/4 ROHS	
15	106958	HHCS 1/4-20 X 1 ROHS	
1-9,12	820544	FP ADULT ADJ 90D 10/11 R	RIGHT
1-9,12	820554	FP ADULT ADJ 90D 10/11 L	LEFT
1-9,12	820546	FP ADULT ADJ 90D 12/13 R	RIGHT
1-9,12	820556	FP ADULT ADJ 90D 12/13 L	LEFT
1-9,12	820472	FP ADULT ADJ 90D 14/15 R	RIGHT
1-9,12	820473	FP ADULT ADJ 90D 14/15 L	LEFT
1-9,12	820474	FP ADULT ADJ 90D 16/17 R	RIGHT
1-9,12	820475	FP ADULT ADJ 90D 16/17 L	LEFT
1-9,12	820476	FP ADULT ADJ 90D 18-20 R	RIGHT
1-9,12	820477	FP ADULT ADJ 90D 18-20 L	LEFT
1-9,12	921474	ADULT ANGL ADJ 90D 10/11 OMIT H/L	PAIR
1-9,12	921476	ADULT ANGL ADJ 90D 12/13 OMIT H/L	PAIR
1-9,12	921330	ADULT ANGL ADJ 90D 14/15 OMIT H/L	PAIR
1-9,12	921331	ADULT ANGL ADJ 90D 16/17 OMIT H/L	PAIR
1-9,12	921332	ADULT ANGL ADJ 90D 18-20 OMIT H/L	PAIR
1-12,14,15	820540	F/PLT ADULT ADJ 90D 10/11 R W/ HL	RIGHT
1-12,14,15	820550	F/PLT ADULT ADJ 90D 10/11 L W/ HL	LEFT
1-12,14,15	820542	F/PLT ADULT ADJ 90D 12/13 R W/ HL	RIGHT
1-12,14,15	820552	F/PLT ADULT ADJ 90D 12/13 L W/ HL	LEFT
1-12,14,15	820478	F/PLT ADULT ADJ 90D 14/15 R W/ HL	RIGHT
1-12,14,15	820479	F/PLT ADULT ADJ 90D 14/15 L W/ HL	LEFT
1-12,14,15	820480	F/PLT ADULT ADJ 90D 16/17 R W/ HL	RIGHT
1-12,14,15	820481	F/PLT ADULT ADJ 90D 16/17 L W/ HL	LEFT
1-12,14,15	820482	F/PLT ADULT ADJ 90D 18-20 R W/ HL	RIGHT
1-12,14,15	820483	F/PLT ADULT ADJ 90D 18-20 L W/ HL	LEFT
1-12,14,15	921470	F/PLT ADULT ADJ 90D 10/11 W/ HL	PAIR
1-12,14,15	921472	F/PLT ADULT ADJ 90D 12/13 W/ HL	PAIR
1-12,14,15	921333	F/PLT ADULT ADJ 90D 14/15 W/ HL	PAIR
1-12,14,15	921334	F/PLT ADULT ADJ 90D 16/17 W/ HL	PAIR
1-12,14,15	921335	F/PLT ADULT ADJ 90D 18-20 W/ HL	PAIR
		Ship assembled part #	Use with multiple assemblies
	ASSY-HNG-FP	HANGER/FOOTPLATE ASSY REQUIRED	add with Hanger & Footplate kit

KIDS ANGLE ADJ FOOTPLATE FRONT MOUNT

To have complete Footrest ship assembled, choose compatible Hanger + Footplate part numbers and add “ASSY-HNG-FP” to order

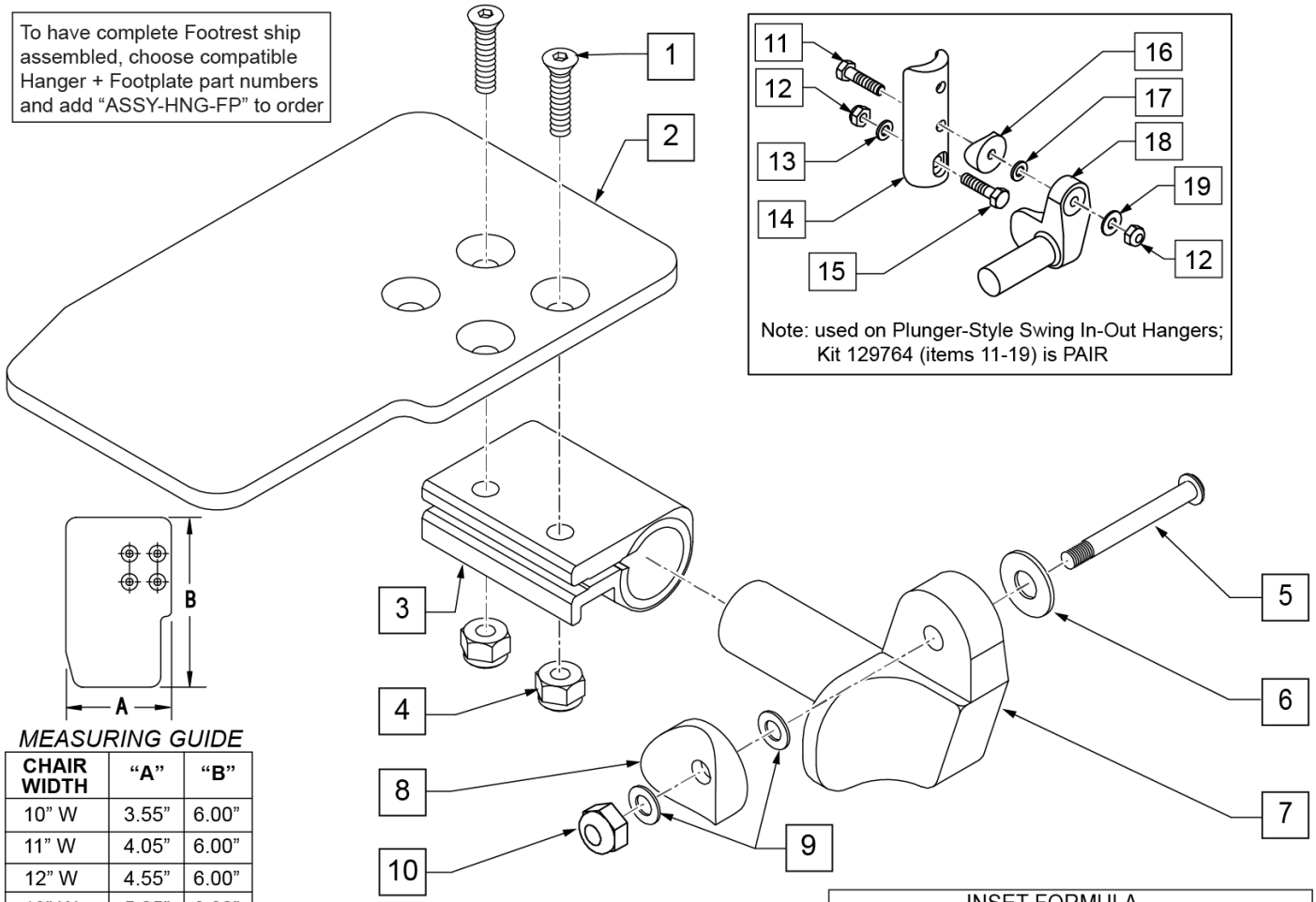

Note: used on Plunger-Style Swing In-Out Hangers; Kit 129764 (items 11-19) is PAIR

MEASURING GUIDE

CHAIR WIDTH	“A”	“B”
10” W	3.55”	6.00”
11” W	4.05”	6.00”
12” W	4.55”	6.00”
13” W	5.05”	6.00”
14” W	5.55”	6.00”
15” W	6.05”	6.00”
16” W	6.55”	6.00”

INSET FORMULA

0” Inset (Seat Width) = Footrest Width
1” Inset (Seat Width) -2” = Footrest Width
“V” Hanger (Seat Width) -4” = Footrest Width
Offset Hanger Receiver (Seat Width) +2” = Footrest Width

Pos.	Item Number	Description	Remarks
1	106978	FHCS 1/4-28 X 7/8 ROHS	
2	500635	KIDS ANGL ADJ F/PLT 10	RIGHT
2	500636	KIDS ANGL ADJ F/PLT 10	LEFT
2	500637	KIDS ANGL ADJ F/PLT 11	RIGHT
2	500638	KIDS ANGL ADJ F/PLT 11	LEFT
2	500639	KIDS ANGL ADJ F/PLT 12	RIGHT
2	500640	KIDS ANGL ADJ F/PLT 12	LEFT
2	500641	KIDS ANGL ADJ F/PLT 13	RIGHT
2	500642	KIDS ANGL ADJ F/PLT 13	LEFT
2	500643	KIDS ANGL ADJ F/PLT 14	RIGHT
2	500644	KIDS ANGL ADJ F/PLT 14	LEFT
2	500645	KIDS ANGL ADJ F/PLT 15	RIGHT
2	500646	KIDS ANGL ADJ F/PLT 15	LEFT
2	500647	KIDS ANGL ADJ F/PLT 16	RIGHT
2	500648	KIDS ANGL ADJ F/PLT 16	LEFT
3	550350	3/4 CLAMP ADJ FOOTPLATE	
4	106935	NUT NYLOCK THIN 1/4-28 ROHS	
5	226147	1/4-28 X 1.85 BH C/S BLK ZN	

Pos.	Item Number	Description	Remarks
6	106945	WASHER FLAT SAE 1/4 ROHS	
7	541000	FTRST MOUNTING BRKT 1/2" RAD R	RIGHT
7	541001	FTRST MOUNTING BRKT 1/2" RAD L	LEFT
8	561004	1 SADDLE 1/4 HOLE	
9	106943	WASHER FLAT THIN AN 1/4	
10	106941	NUT AUTOMATION 1/4-28 ROHS	
11	102268-001	HHCS M6 X 1 X 25	
12	132626	NUT AUTOMATION M6 X 1.0 ROHS	
13	107383	WASHER FLAT M6 ROHS	
15	118198	HHCS M6 X 1 X 40 PART NP	
16	561004	1" SADDLE 1/4" HOLE	
17	106943	WASHER FLAT AN 1/4 ROHS	
19	106945	WASHER FLAT SAE 1/4 ROHS	
1-4	158632	KAA F/PLT KIT 10 RT	RIGHT; used with Front Mount Adapter Kit on Plunger-Style Swing In/Out Hangers
1-4	158633	KAA F/PLT KIT 10 LT	LEFT; used with Front Mount Adapter Kit on Plunger-Style Swing In/Out Hangers
1-4	158634	KAA F/PLT KIT 11 RT	RIGHT; used with Front Mount Adapter Kit on Plunger-Style Swing In/Out Hangers
1-4	158635	KAA F/PLT KIT 11 LT	LEFT; used with Front Mount Adapter Kit on Plunger-Style Swing In/Out Hangers
1-4	158636	KAA F/PLT KIT 12 RT	RIGHT; used with Front Mount Adapter Kit on Plunger-Style Swing In/Out Hangers
1-4	158637	KAA F/PLT KIT 12 LT	LEFT; used with Front Mount Adapter Kit on Plunger-Style Swing In/Out Hangers
1-4	158638	KAA F/PLT KIT 13 RT	RIGHT; used with Front Mount Adapter Kit on Plunger-Style Swing In/Out Hangers
1-4	158639	KAA F/PLT KIT 13 LT	LEFT; used with Front Mount Adapter Kit on Plunger-Style Swing In/Out Hangers
1-4	158640	KAA F/PLT KIT 14 RT	RIGHT; used with Front Mount Adapter Kit on Plunger-Style Swing In/Out Hangers
1-4	158641	KAA F/PLT KIT 14 LT	LEFT; used with Front Mount Adapter Kit on Plunger-Style Swing In/Out Hangers
1-4	158642	KAA F/PLT KIT 15 RT	RIGHT; used with Front Mount Adapter Kit on Plunger-Style Swing In/Out Hangers
1-4	158643	KAA F/PLT KIT 15 LT	LEFT; used with Front Mount Adapter Kit on Plunger-Style Swing In/Out Hangers
1-4	158644	KAA F/PLT KIT 16 RT	RIGHT; used with Front Mount Adapter Kit on Plunger-Style Swing In/Out Hangers
1-4	158645	KAA F/PLT KIT 16 LT	LEFT; used with Front Mount Adapter Kit on Plunger-Style Swing In/Out Hangers
1-10	828821	KIDS ANG ADJ F/PLT ASSM 10	RIGHT; used with Old-Style Latch Block Swing In/Out & S/A Hangers
1-10	828822	KIDS ANG ADJ F/PLT ASSM 10	LEFT; used with Old-Style Latch Block Swing In/Out & S/A Hangers
1-10	828823	KIDS ANG ADJ F/PLT ASSM 11	RIGHT; used with Old-Style Latch Block Swing In/Out & S/A Hangers
1-10	828824	KIDS ANG ADJ F/PLT ASSM 11	LEFT; used with Old-Style Latch Block Swing In/Out & S/A Hangers
1-10	828825	KIDS ANG ADJ F/PLT ASSM 12	RIGHT; used with Old-Style Latch Block Swing In/Out & S/A Hangers
1-10	828826	KIDS ANG ADJ F/PLT ASSM 12	LEFT; used with Old-Style Latch Block Swing In/Out & S/A Hangers
1-10	828827	KIDS ANG ADJ F/PLT ASSM 13	RIGHT; used with Old-Style Latch Block Swing In/Out & S/A Hangers
1-10	828828	KIDS ANG ADJ F/PLT ASSM 13	LEFT; used with Old-Style Latch Block Swing In/Out & S/A Hangers
1-10	828829	KIDS ANG ADJ F/PLT ASSM 14	RIGHT; used with Old-Style Latch Block Swing In/Out & S/A Hangers
1-10	828830	KIDS ANG ADJ F/PLT ASSM 14	LEFT; used with Old-Style Latch Block Swing In/Out & S/A Hangers
1-10	828831	KIDS ANG ADJ F/PLT ASSM 15	RIGHT; used with Old-Style Latch Block Swing In/Out & S/A Hangers
1-10	828832	KIDS ANG ADJ F/PLT ASSM 15	LEFT; used with Old-Style Latch Block Swing In/Out & S/A Hangers

Pos.	Item Number	Description	Remarks
1-10	828833	KIDS ANG ADJ F/PLT ASSM 16	RIGHT; used with Old-Style Latch Block Swing In/Out & S/A Hangers
1-10	828834	KIDS ANG ADJ F/PLT ASSM 16	LEFT; used with Old-Style Latch Block Swing In/Out & S/A Hangers
1-10	921226	KIDS ANG ADJ F/PLT ASSM 10	PAIR; used with Old-Style Latch Block Swing In/Out & S/A Hangers
1-10	921227	KIDS ANG ADJ F/PLT ASSM 11	PAIR; used with Old-Style Latch Block Swing In/Out & S/A Hangers
1-10	921228	KIDS ANG ADJ F/PLT ASSM 12	PAIR; used with Old-Style Latch Block Swing In/Out & S/A Hangers
1-10	921229	KIDS ANG ADJ F/PLT ASSM 13	PAIR; used with Old-Style Latch Block Swing In/Out & S/A Hangers
1-10	921230	KIDS ANG ADJ F/PLT ASSM 14	PAIR; used with Old-Style Latch Block Swing In/Out & S/A Hangers
1-10	921231	KIDS ANG ADJ F/PLT ASSM 15	PAIR; used with Old-Style Latch Block Swing In/Out & S/A Hangers
1-10	921232	KIDS ANG ADJ F/PLT ASSM 16	PAIR; used with Old-Style Latch Block Swing In/Out & S/A Hangers
11-19	129764	AAA FRNT MNT ADAPTER KIT PR	AAA FRNT MNT fits both Kids and Adult Angle Adjustable Footplates
		Ship assembled part #	Use with multiple assemblies
	ASSY-HNG-FP	HANGER/FOOTPLATE ASSY REQUIRED	add with Hanger & Footplate kit

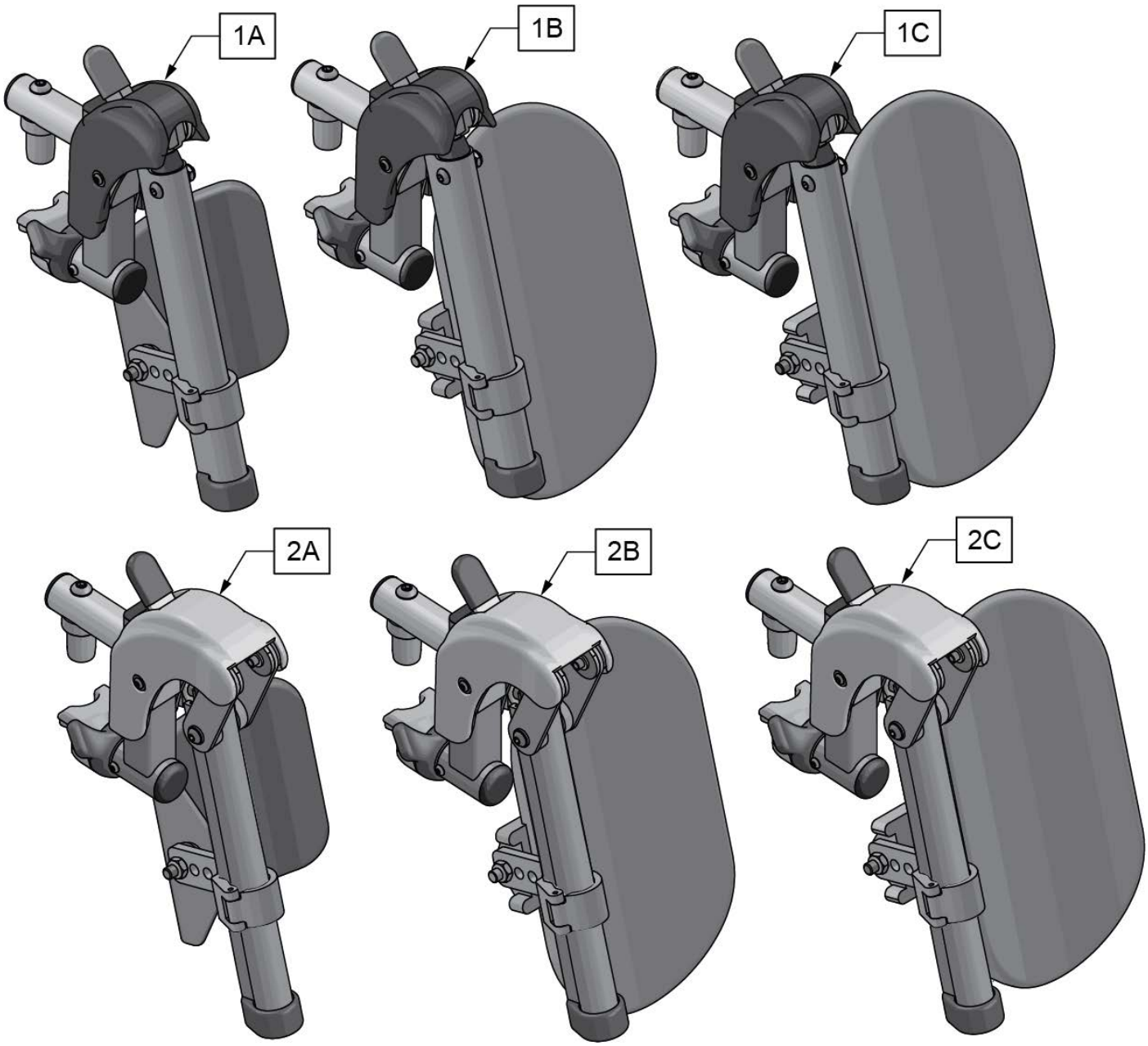

Pos.	Item Number	Description	Remarks
1A	161233S	SWNG I/O ELR ASM 14-15 W/PAD	Pair
1B	161234S	SWNG I/O ELR ASM 16-17 W/PAD	Pair
1C	161235S	SWNG I/O ELR ASM 18-20 W/PAD	Pair
2A	161236S	SWNG I/O ALR ASM 14-15 W/PAD	Pair
2B	161237S	SWNG I/O ALR ASM 16-17 W/PAD	Pair
2C	161238S	SWNG I/O ALR ASM 18-20 W/PAD	Pair
		Ship assembled part #	Use with multiple assemblies
	ASSY-HNG-FP	HANGER/FOOTPLATE ASSY REQUIRED	add with Hanger & Footplate kit

[7/2016] SWING IN-OUT EXT MOUNT ELR REPLACEMENT PARTS (PLUNGER STYLE) (EFFECTIVE 2/6/17)

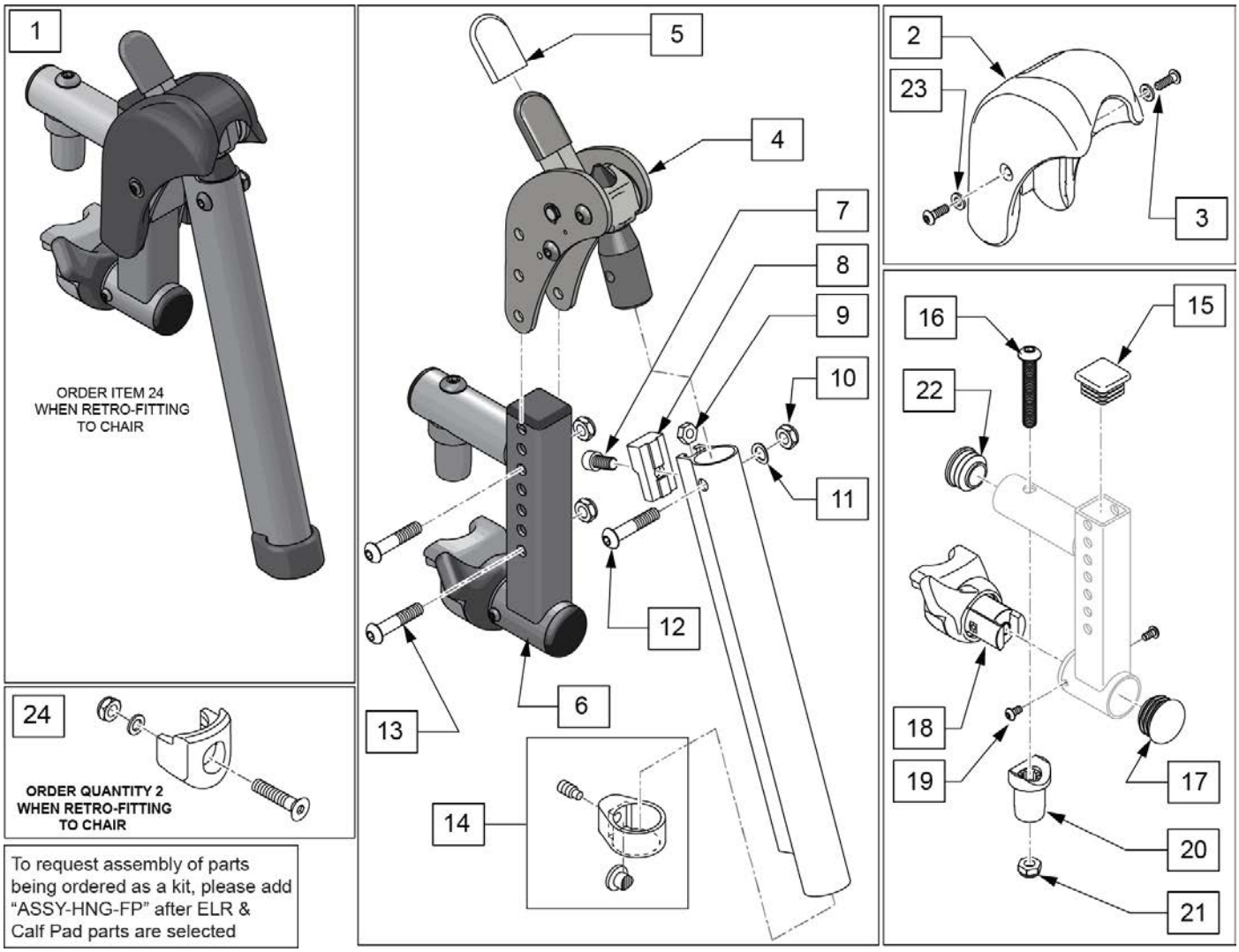

Pos.	Item Number	Description	Remarks
1	161239S	SWNG I/O ELR ASSM RH	Right
1	161240S	SWNG I/O ELR ASSM LH	Left
1	161241S	SWNG I/O ELR ASSM PR	Pair
2,3,23	129640	ELR SHROUD KIT	Kit w/ 2 screws
3	127135	BHCS 8-32 X 1/2 BLK	
4	126992	HEMI ELR SUB ASSM	
5	560501	ALR REL LEVER COVER	
6	134188	RECEIVER ASSY ELR ALR RH	
6	134186	RECEIVER ASSY ELR ALR LH	
7	107350	SHCS 1/4-28 x 1/2	
8	127129	ANGLE STOP ELR	
9	107249	NUT HEX THIN 1/4-28	
10	106935	1/4-28 NYLOCK NUT THIN BLK ZN	
11	104414	WAVE WASHER 6 MM	
12	106961	BHCS 1/4 -28 x 1 1/4 ROHS	
13	108623	BHCS 1/4-28 x 1-1/2	
14	119495	EXTENSION CLAMP KIT	
15	010615	SQUARE END CAP CNTR LEG	

Pos.	Item Number	Description	Remarks
16	226217	5/16-18 X 2" BH C/S BLK	
17	561062	1" INSERT PLUG .065 RIBS	
18,19	161242	ELR/ALR HANGER LATCH KIT RH	Right
18,19	161243	ELR/ALR HANGER LATCH KIT LH	Left
20	561197	PLASTIC PIVOT SADDLE	
21	202102	5/16-18 NYLOCK NUT THIN	
22	560110	ENDPLUG BACKREST TNT	
23	113282	WASHER FLAT AN #10 ROHS	
24	119514	LATCH RECEIVER KIT	order qty 2 when retro-fitting to chair
		Ship assembled part #	Use with multiple assemblies
	ASSY-HNG-FP	HANGER/FOOTPLATE ASSY REQUIRED	add with Hanger & Footplate kit

SWING IN-OUT ALR EXT MNT REPLACEMENT PARTS (PLUNGER STYLE)(EFFECTIVE 2/6/17)

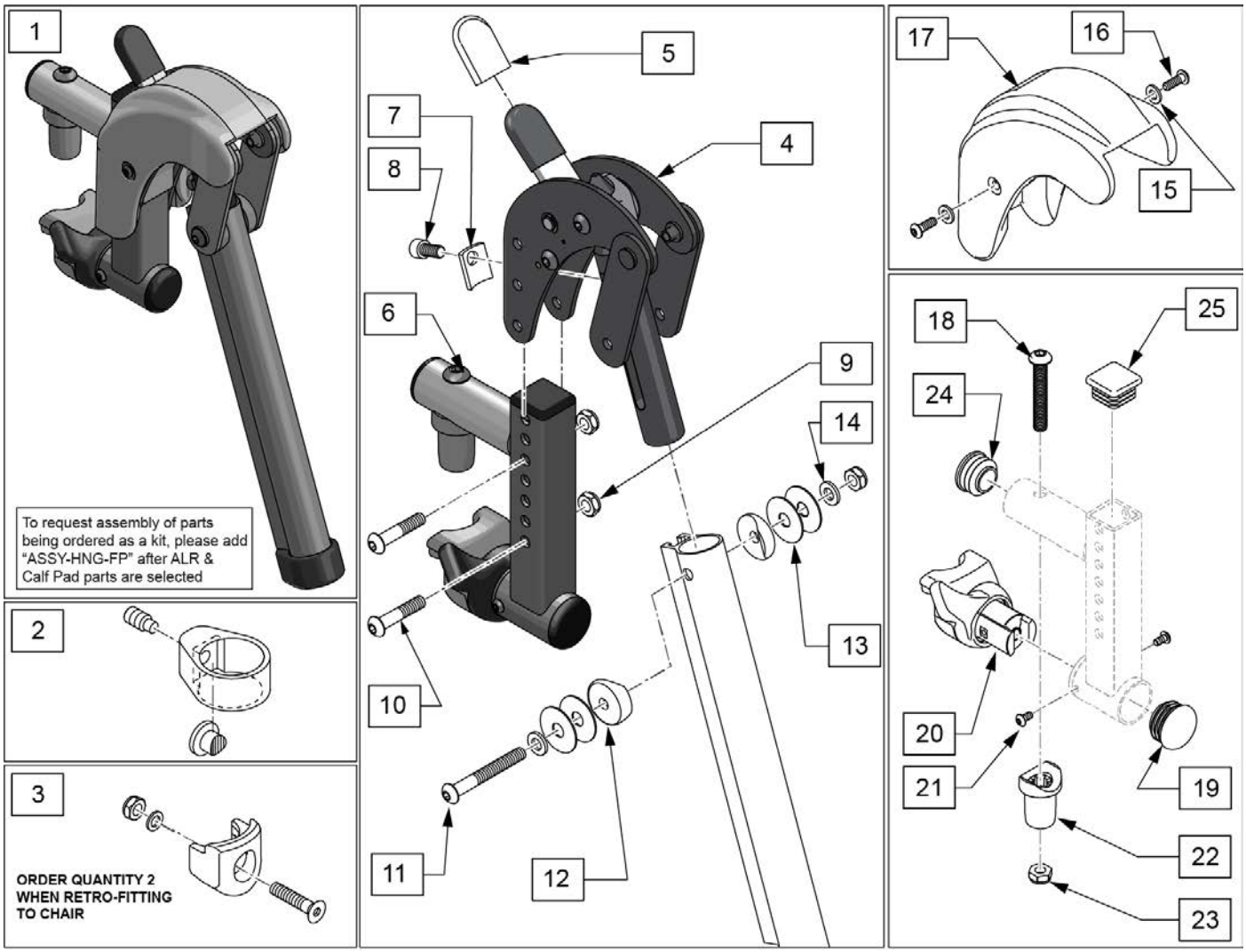

Pos.	Item Number	Description	Remarks
1	161244S	SWNG I/O ALR ASSM RH KIT	Right
1	161245S	SWNG I/O ALR ASSM LH KIT	Left
1	161246S	SWNG I/O ALR ASSM PR KIT	Pair
2	119495	EXTENSION CLAMP KIT	
3	119514	LATCH RECEIVER KIT	order qty 2 when retro-fitting to chair
4	127153	HEMI ALR SUB ASSM	
5	560501	ALR REL LEVER COVER	
6	134188	RECEIVER ASSY ELR ALR RH	
6	134186	RECEIVER ASSY ELR ALR LH	
7	127129	ANGLE STOP ELR	
8	107350	SHCS 1/4-28 x 1/2	
9	106935	1/4-28 NYLOCK NUT THIN BLK ZN	
10	108623	BHCS 1/4-28 x 1-1/2	
11	106964	BHCS 1/4-28 X 2	
12	561086	1" HALF SADDLE 1/4" HOLE	
13	113268	WASHER NYLON 1IN OD X .312 ID	
14	106943	WASHER FLAT AN 1/4 ROHS	
15	113282	WASHER FLAT AN #10 ROHS	

Pos.	Item Number	Description	Remarks
16	127135	BHCS 8-32 X 1/2 BLK	
15-17	129633	ALR SHROUD KIT	1 side
18	226217	5/16-18 X 2" BH C/S BLK	
19	560110	ENDPLUG BACKREST TNT	
20,21	161242	ELR/ALR HANGER LATCH KIT RH	Right
20,21	161243	ELR/ALR HANGER LATCH KIT LH	Left
22	561197	PLASTIC PIVOT SADDLE	
23	202102	5/16-18 NYLOCK NUT THIN	
24	561062	1" INSERT PLUG .065 RIBS	
25	010615	SQUARE END CAP CNTR LEG	
		Ship assembled part #	Use with multiple assemblies
	ASSY-HNG-FP	HANGER/FOOTPLATE ASSY REQUIRED	add with Hanger & Footplate kit

ELR & ALR CALF PAD 14 -15"

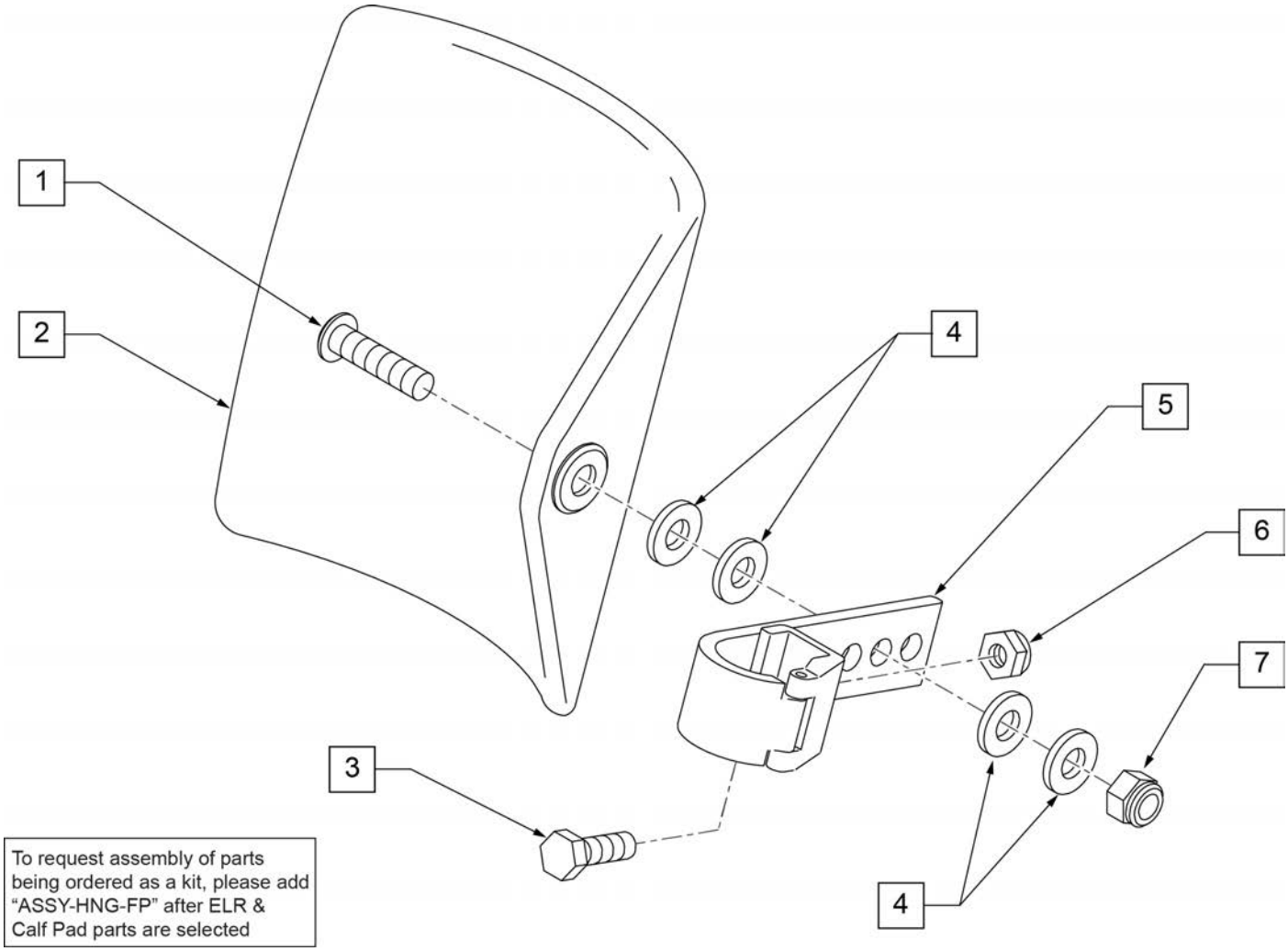

Pos.	Item Number	Description	Remarks
1	106980	BHCS 5/16-18 X 1-1/4 ROHS	
2	755014	CALF PAD TROUGH STYLE 14"/16"	
3	221097	1/4-28 X 5/8 HEX C/S BZ	
4	561016	1" WASHER 5/16" HOLE	
5	881413	CALF PAD BRACKET ASSEMBLY	
6	106934	NUT NYLOCK 1/4-28 ROHS	
7	106937	NUT NYLOCK THIN 5/16-18	
1-7	881414	CALF PAD J-HOOK 14"-15" ASSEMBLY	
		Ship assembled part #	Use with multiple assemblies
	ASSY-HNG-FP	HANGER/FOOTPLATE ASSY REQUIRED	add with Hanger & Footplate kit

ELR & ALR CALF PAD 16-20"

[02/27/2019]

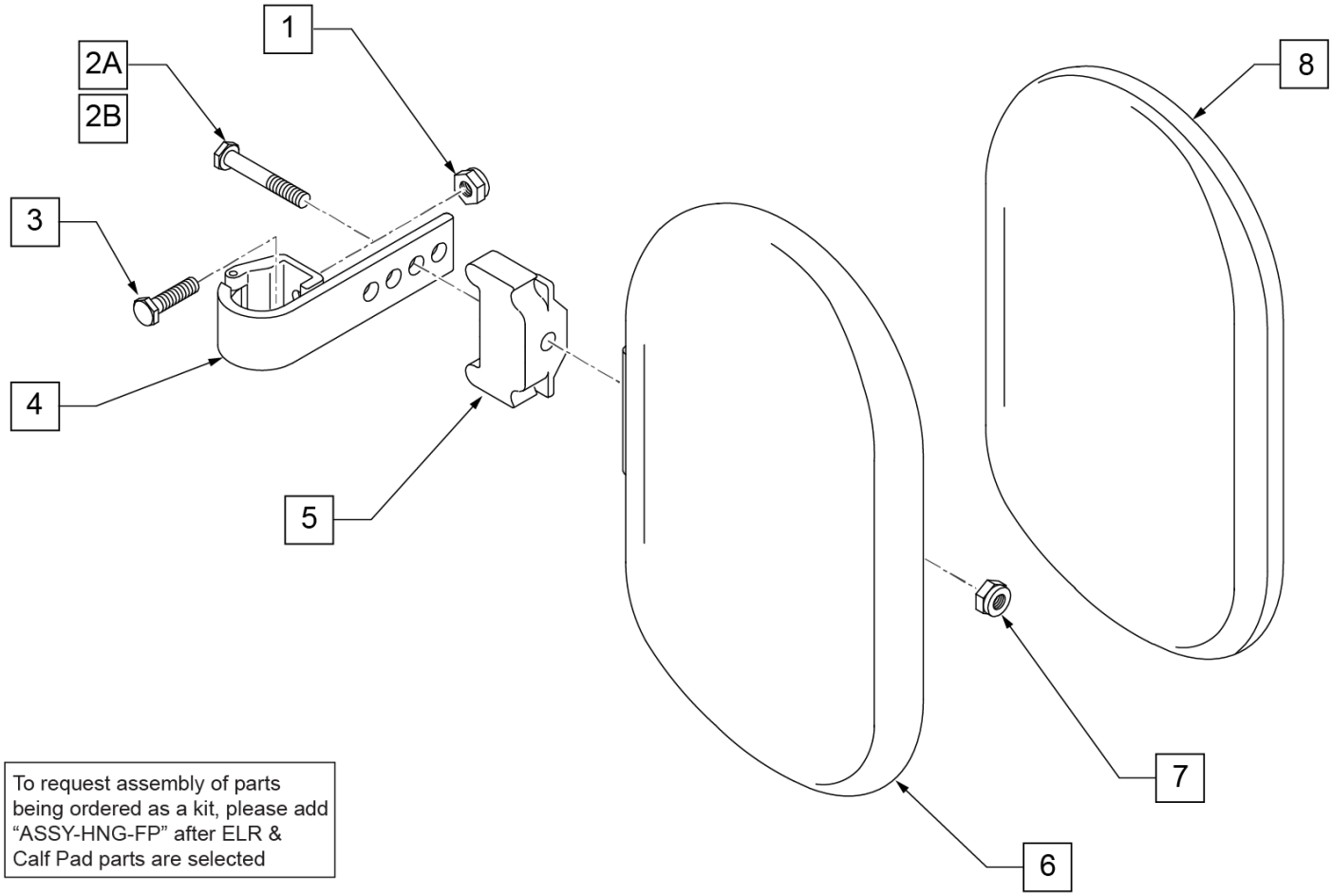

To request assembly of parts being ordered as a kit, please add "ASSY-HNG-FP" after ELR & Calf Pad parts are selected

Pos.	Item Number	Description	Remarks
1	106934	NUT NYLOCK 1/4-28 ROHS	
2A	107018	HHCS 5/16-18 X 2-1/2 ROHS	16"-17" wide only
2B	107019	HHCS 5/16-18 X 3-1/2 ROHS	18"-20" wide only
3	107013	HHCS 1/4-28 X 5/8 ROHS	
4	881413	CALF PAD BRACKET ASSEMBLY	
5	560199	ELR CALF HINGE SPACER	18"-20" wide only
6	560108	CALF PAD MOLDED 16"-20"	
7	106936	NUT NYLOCK 5/16-18 ROHS	
8	751045	CALF PAD COVER	
1,2A,3,4,6-8	881416	CALF MOLDED 16"-17" ASSEMBLY	
1,2B,3-7,8	881412	CALF PAD MOLDED 18"-20" ASSEMBLY	
		Ship assembled part #	Use with multiple assemblies
	ASSY-HNG-FP	HANGER/FOOTPLATE ASSY REQUIRED	add with Hanger & Footplate kit

COMPOSITE FOOTPLATE

Note: Footplate Assemblies are set to footrest width; please see "Footplate Formula" table for seat width conversion.

Note: If using Short Ext Tube & Hemi Hanger with Composite Footplate use 1G (bent) .

Note: V Style Hangers are not available on Swing Away Style chairs effective 7/14/14; see the "Prior To" ordering guide for V Style footplate assemblies.

Note: see Informations Panel for appropriate ordering guide; for QX Series or SR45 footplate replacement parts see ordering guide marked specifically for these two models.

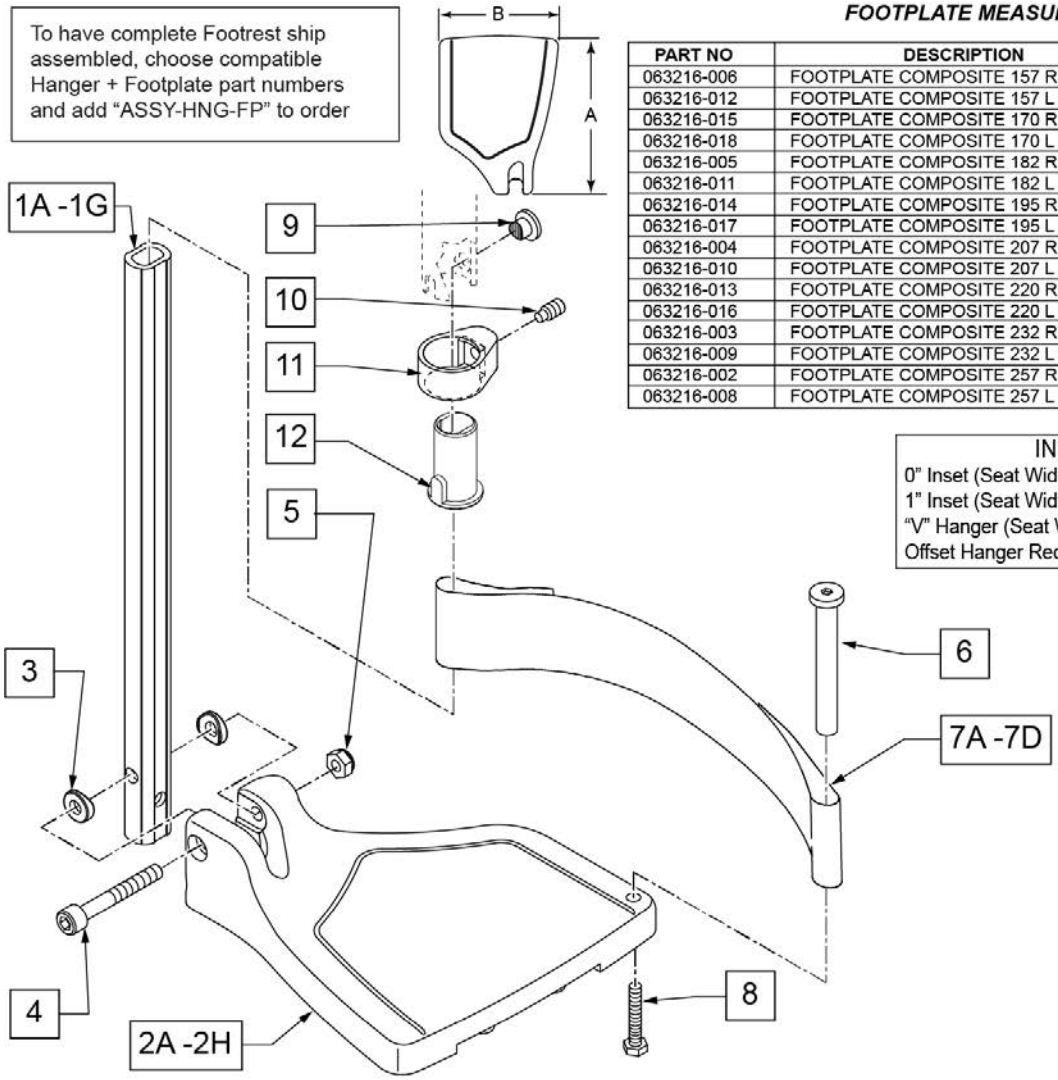

FOOTPLATE MEASURING GUIDE

PART NO	DESCRIPTION	"A"	"B"
063216-006	FOOTPLATE COMPOSITE 157 R (13"W)	6 1/8"	6"
063216-012	FOOTPLATE COMPOSITE 157 L (13"W)	6 1/8"	6"
063216-015	FOOTPLATE COMPOSITE 170 R (14"W)	6 5/8"	6"
063216-018	FOOTPLATE COMPOSITE 170 L (14"W)	6 5/8"	6"
063216-005	FOOTPLATE COMPOSITE 182 R (15"W)	7 1/8"	6"
063216-011	FOOTPLATE COMPOSITE 182 L (15"W)	7 1/8"	6"
063216-014	FOOTPLATE COMPOSITE 195 R (16"W)	7 5/8"	6"
063216-017	FOOTPLATE COMPOSITE 195 L (16"W)	7 5/8"	6"
063216-004	FOOTPLATE COMPOSITE 207 R (17"W)	8 1/8"	6"
063216-010	FOOTPLATE COMPOSITE 207 L (17"W)	8 1/8"	6"
063216-013	FOOTPLATE COMPOSITE 220 R (18"W)	8 5/8"	6 1/4"
063216-016	FOOTPLATE COMPOSITE 220 L (18"W)	8 5/8"	6 1/4"
063216-003	FOOTPLATE COMPOSITE 232 R (19-20"W)	9 1/8"	6 1/4"
063216-009	FOOTPLATE COMPOSITE 232 L (19-20"W)	9 1/8"	6 1/4"
063216-002	FOOTPLATE COMPOSITE 257 R (21-22"W)	10 1/8"	6 1/4"
063216-008	FOOTPLATE COMPOSITE 257 L (21-22"W)	10 1/8"	6 1/4"

INSET FORMULA

0" Inset (Seat Width) = Footrest Width
1" Inset (Seat Width) -2" = Footrest Width
"V" Hanger (Seat Width) -4" = Footrest Width
Offset Hanger Receiver (Seat Width) +2" = Footrest Width

Pos.	Item Number	Description	Remarks
1A,3-5	120660	SHT STRT EXT COMP HDWR	80 deg hangers + ELR only
1B,3-5	120661	MED STRT EXT COMP HDWR	80 deg hangers + ELR only
1C,3-5	120662	LNG STRT EXT COMP HDWR	80 deg hangers + ELR only
1D,3-5	120663	SHT BNT EXT COMP HDWR	60,70,70 Hemi Hangers
1E,3-5	120664	MED BNT EXT COMP HDWR	60,70,70 Hemi Hangers
1F,3-5	120665	LNG BNT EXT COMP HDWR	60,70,70 Hemi Hangers
1G	128078	TUBE FOOTREST EXT SHT HEMI	use for Hemi Ext Tube option
2A	063216-006	COMPOSITE FOOTPLATE RIGHT	RIGHT 13" Footrest Width
2A	063216-012	COMPOSITE FOOTPLATE LEFT	LEFT 13" Footrest Width
2B	063216-015	FOOTPLATE COMPOSITE RIGHT	RIGHT 14" Footrest Width
2B	063216-018	FOOTPLATE COMPOSITE LEFT	LEFT 14" Footrest Width
2C	063216-005	COMPOSITE FOOTPLATE RIGHT	RIGHT 15" Footrest Width
2C	063216-011	COMPOSITE FOOTPLATE LEFT	LEFT 15" Footrest Width
2D	063216-014	FOOTPLATE COMPOSITE RIGHT	RIGHT 16" Footrest Width
2D	063216-017	FOOTPLATE COMPOSITE LEFT	LEFT 16" Footrest Width
2E	063216-004	COMPOSITE FOOTPLATE RIGHT	RIGHT 17" Footrest Width
2E	063216-010	COMPOSITE FOOTPLATE LEFT	LEFT 17" Footrest Width
2F	063216-013	FOOTPLATE COMPOSITE RIGHT	RIGHT 18" Footrest Width
2F	063216-016	FOOTPLATE COMPOSITE LEFT	LEFT 18" Footrest Width
2G	063216-003	COMPOSITE FOOTPLATE RIGHT	RIGHT 19" & 20" Footrest Width
2G	063216-009	COMPOSITE FOOTPLATE LEFT	LEFT 19" & 20" Footrest Width
2H	063216-002	FOOTPLATE COMPOSITE RIGHT	RIGHT 21" & 22" Footrest Width
2H	063216-008	FOOTPLATE COMPOSITE LEFT	LEFT 21" & 22" Footrest Width
3	104377	3/4" SADDLE THIN	
4	103175	SHCS M6 X 1 X 40 INORG	
5	132626	NUT AUTOMATION M6 X 1.0	Inserted in bottom of footplate.
6	104328	HEEL LOOP PEG	
7A	104380-001	ADJUSTABLE FOOT REST STRAP	14" wide
7B	104380-002	ADJUSTABLE FOOT REST STRAP	15-16" wide
7C	104380-003	ADJUSTABLE FOOT REST STRAP	17-18" wide
7D	104380-004	ADJUSTABLE FOOT REST STRAP	19-22" wide
8	102268-001	HHCS M6 X 1 X 25	
12	104160	BUSHING FOOTREST	
9-12	107485	FOOTREST CLAMP ASSM	
>>>>		80 DEGREE HANGERS - SHORT EXT - RIGHT	
1A,2A,3-6,7A,8	107704	COMP STRT SHT EXT ASM 13"W R	Right- 80D- 13" W- SHORT
1A,2B,3-6,7A,8	107705	COMP STRT SHT EXT ASM 14"W R	Right- 80D- 14" W- SHORT
1A,2C,3-6,7B,8	107706	COMP STRT SHT EXT ASM 15"W R	Right- 80D- 15" W- SHORT
1A,2D,3-6,7B,8	107707	COMP STRT SHT EXT ASM 16"W R	Right- 80D- 16" W- SHORT
1A,2E,3-6,7C,8	107708	COMP STRT SHT EXT ASM 17"W R	Right- 80D- 17" W- SHORT
1A,2F,3-6,7C,8	107709	COMP STRT SHT EXT ASM 18"W R	Right- 80D- 18" W- SHORT
1A,2G,3-6,7D,8	107710	COMP STRT SHT EXT ASM 19 & 20"W R	Right- 80D- 19 & 20" W- SHORT
1A,2H,3-6,7D,8	111522	COMP STRT SHT EXT ASM 21 & 22"W R	Right- 80D- 21 & 22" W- SHORT
>>>>		80 DEGREE HANGERS - SHORT EXT - LEFT	
1A,2A,3-6,7A,8	107711	COMP STRT SHT EXT ASM 13"W L	LEFT- 80D- 13" W- SHORT
1A,2B,3-6,7A,8	107712	COMP STRT SHT EXT ASM 14"W L	LEFT- 80D- 14" W- SHORT
1A,2C,3-6,7B,8	107713	COMP STRT SHT EXT ASM 15"W L	LEFT- 80D- 15" W- SHORT
1A,2D,3-6,7B,8	107714	COMP STRT SHT EXT ASM 16"W L	LEFT- 80D- 16" W- SHORT
1A,2E,3-6,7C,8	107715	COMP STRT SHT EXT ASM 17"W L	LEFT- 80D- 17" W- SHORT
1A,2F,3-6,7C,8	107716	COMP STRT SHT EXT ASM 18"W L	LEFT- 80D- 18" W- SHORT
1A,2G,3-6,7D,8	107717	COMP STRT SHT EXT ASM 19 & 20"W L	LEFT- 80D- 19 & 20" W- SHORT
1A,2H,3-6,7D,8	111523	COMP STRT SHT EXT ASM 21 & 22"W L	LEFT- 80D- 21 & 22" W- SHORT
>>>>		80 DEGREE HANGERS - MED EXT - RIGHT	
1B,2A,3-6,7A,8	107718	COMP STRT MED EXT ASM 13"W R	Right- 80D- 13" W- MED
1B,2B,3-6,7A,8	107719	COMP STRT MED EXT ASM 14"W R	Right- 80D- 14" W- MED
1B,2C,3-6,7B,8	107720	COMP STRT MED EXT ASM 15"W R	Right- 80D- 15" W- MED

Pos.	Item Number	Description	Remarks
1B,2D,3-6,7B,8	107721	COMP STRT MED EXT ASM 16"W R	Right- 80D- 16" W- MED
1B,2E,3-6,7C,8	107722	COMP STRT MED EXT ASM 17"W R	Right- 80D- 17" W- MED
1B,2F,3-6,7C,8	107723	COMP STRT MED EXT ASM 18"W R	Right- 80D- 18" W- MED
1B,2G,3-6,7D,8	107724	COMP STRT MED EXT ASM 19 & 20"W R	Right- 80D- 19 & 20" W- MED
1B,2H,3-6,7D,8	111524	COMP STRT MED EXT ASM 21 & 22"W R	Right- 80D- 21 & 22" W- MED
>>>>		80 DEGREE HANGERS - MED EXT - LEFT	
1B,2A,3-6,7A,8	107725	COMP STRT MED EXT ASM 13"W L	LEFT- 80D- 13" W- MED
1B,2B,3-6,7A,8	107726	COMP STRT MED EXT ASM 14"W L	LEFT- 80D- 14" W- MED
1B,2C,3-6,7B,8	107727	COMP STRT MED EXT ASM 15"W L	LEFT- 80D- 15" W- MED
1B,2D,3-6,7B,8	107728	COMP STRT MED EXT ASM 16"W L	LEFT- 80D- 16" W- MED
1B,2E,3-6,7C,8	107729	COMP STRT MED EXT ASM 17"W L	LEFT- 80D- 17" W- MED
1B,2F,3-6,7C,8	107730	COMP STRT MED EXT ASM 18"W L	LEFT- 80D- 18" W- MED
1B,2G,3-6,7D,8	107731	COMP STRT MED EXT ASM 19 & 20"W L	LEFT- 80D- 19 & 20" W- MED
1B,2H,3-6,7D,8	111525	COMP STRT MED EXT ASM 21 & 22"W L	LEFT- 80D- 21 & 22" W- MED
>>>>		80 DEGREE HANGERS - LONG EXT - RIGHT	
1C,2A,3-6,7A,8	107732	COMP STRT LONG EXT ASM 13"W R	Right- 80D- 13" W- LONG
1C,2B,3-6,7A,8	107733	COMP STRT LONG EXT ASM 14"W R	Right- 80D- 14" W- LONG
1C,2C,3-6,7B,8	107734	COMP STRT LONG EXT ASM 15"W R	Right- 80D- 15" W- LONG
1C,2D,3-6,7B,8	107735	COMP STRT LONG EXT ASM 16"W R	Right- 80D- 16" W- LONG
1C,2E,3-6,7C,8	107736	COMP STRT LONG EXT ASM 17"W R	Right- 80D- 17" W- LONG
1C,2F,3-6,7C,8	107737	COMP STRT LONG EXT ASM 18"W R	Right- 80D- 18" W- LONG
1C,2G,3-6,7D,8	107738	COMP STRT LONG EXT ASM 19 & 20"W R	Right- 80D- 19 & 20" W- LONG
1C,2H,3-6,7D,8	111526	COMP STRT LONG EXT ASM 21 & 22"W R	Right- 80D- 21 & 22" W- LONG
>>>>		80 DEGREE HANGERS - LONG EXT - LEFT	
1C,2A,3-6,7A,8	107739	COMP STRT LONG EXT ASM 13"W L	LEFT- 80D- 13" W- LONG
1C,2B,3-6,7A,8	107740	COMP STRT LONG EXT ASM 14"W L	LEFT- 80D- 14" W- LONG
1C,2C,3-6,7B,8	107741	COMP STRT LONG EXT ASM 15"W L	LEFT- 80D- 15" W- LONG
1C,2D,3-6,7B,8	107742	COMP STRT LONG EXT ASM 16"W L	LEFT- 80D- 16" W- LONG
1C,2E,3-6,7C,8	107743	COMP STRT LONG EXT ASM 17"W L	LEFT- 80D- 17" W- LONG
1C,2F,3-6,7C,8	107744	COMP STRT LONG EXT ASM 18"W L	LEFT- 80D- 18" W- LONG
1C,2G,3-6,7D,8	107745	COMP STRT LONG EXT ASM 19 & 20"W L	LEFT- 80D- 19 & 20" W- LONG
1C,2H,3-6,7D,8	111527	COMP STRT LONG EXT ASM 21 & 22"W L	LEFT- 80D- 21 & 22" W- LONG
>>>>		60°,70° SHORT EXT - RIGHT	
1D,2A,3-6,7A,8	107746	COMP BNT SHT EXT ASM 13" W R	Right- 70D- 13" W- SHORT
1D,2B,3-6,7A,8	107747	COMP BNT SHT EXT ASM 14" W R	Right- 70D- 14" W- SHORT
1D,2C,3-6,7B,8	107748	COMP BNT SHT EXT ASM 15" W R	Right- 70D- 15" W- SHORT
1D,2D,3-6,7B,8	107749	COMP BNT SHT EXT ASM 16" W R	Right- 70D- 16" W- SHORT
1D,2E,3-6,7C,8	107750	COMP BNT SHT EXT ASM 17" W R	Right- 70D- 17" W- SHORT
1D,2F,3-6,7C,8	107751	COMP BNT SHT EXT ASM 18" W R	Right- 70D- 18" W- SHORT
1D,2G,3-6,7D,8	107752	COMP BNT SHT EXT ASM 19 & 20"W R	Right- 70D- 19 & 20" W- SHORT
1D,2H,3-6,7D,8	111528	COMP BNT SHT EXT ASM 21 & 22"W R	Right- 70D- 21 & 22" W- SHORT
>>>>		60°,70° - SHORT EXT - LEFT	
1D,2A,3-6,7A,8	107753	COMP BNT SHT EXT ASM 13" W L	Left- 70D- 13 W- SHORT
1D,2B,3-6,7A,8	107754	COMP BNT SHT EXT ASM 14" W L	Left- 70D- 14 W- SHORT
1D,2C,3-6,7B,8	107755	COMP BNT SHT EXT ASM 15" W L	Left- 70D- 15 W- SHORT
1D,2D,3-6,7B,8	107756	COMP BNT SHT EXT ASM 16" W L	Left- 70D- 16 W- SHORT
1D,2E,3-6,7C,8	107757	COMP BNT SHT EXT ASM 17" W L	Left- 70D- 17 W- SHORT
1D,2F,3-6,7C,8	107758	COMP BNT SHT EXT ASM 18" W L	Left- 70D- 18 W- SHORT
1D,2G,3-6,7D,8	107759	COMP BNT SHT EXT ASM 19 & 20"W L	Left- 70D- 19 & 20" W- SHORT
1D,2H,3-6,7D,8	111529	COMP BNT SHT EXT ASM 21 & 22"W L	Left- 70D- 21 & 22" W- SHORT
>>>>		60°,70°,60°&70° HEMI HANGERS - MED EXT - RIGHT	
1E,2A,3-6,7A,8	107760	COMP BNT MED EXT ASM 13" W R	Right- 70D- 13" W- MED
1E,2B,3-6,7A,8	107761	COMP BNT MED EXT ASM 14" W R	Right- 70D- 14" W- MED
1E,2C,3-6,7B,8	107762	COMP BNT MED EXT ASM 15" W R	Right- 70D- 15" W- MED
1E,2D,3-6,7B,8	107763	COMP BNT MED EXT ASM 16" W R	Right- 70D- 16" W- MED
1E,2E,3-6,7C,8	107764	COMP BNT MED EXT ASM 17" W R	Right- 70D- 17" W- MED

Pos.	Item Number	Description	Remarks
1E,2F,3-6,7C,8	107765	COMP BNT MED EXT ASM 18" W R	Right- 70D- 18" W- MED
1E,2G,3-6,7D,8	107766	COMP BNT MED EXT ASM 19 & 20"W R	Right- 70D- 19 & 20" W- MED
1E,2H,3-6,7D,8	111530	COMP BNT MED EXT ASM 21 & 22"W R	Right- 70D- 21 & 22" W- MED
>>>>		60°,70°,60°&70° HEMI HANGERS - MED EXT - LEFT	
1E,2A,3-6,7A,8	107767	COMP BNT MED EXT ASM 13" W L	Left- 70D- 13 W- MED
1E,2B,3-6,7A,8	107768	COMP BNT MED EXT ASM 14" W L	Left- 70D- 14 W- MED
1E,2C,3-6,7B,8	107769	COMP BNT MED EXT ASM 15" W L	Left- 70D- 15 W- MED
1E,2D,3-6,7B,8	107770	COMP BNT MED EXT ASM 16" W L	Left- 70D- 16 W- MED
1E,2E,3-6,7C,8	107771	COMP BNT MED EXT ASM 17" W L	Left- 70D- 17 W- MED
1E,2F,3-6,7C,8	107772	COMP BNT MED EXT ASM 18" W L	Left- 70D- 18 W- MED
1E,2G,3-6,7D,8	107773	COMP BNT MED EXT ASM 19 & 20"W L	Left- 70D- 19 & 20" W- MED
1E,2H,3-6,7D,8	111531	COMP BNT MED EXT ASM 21 & 22"W L	Left- 70D- 21 & 22" W- MED
>>>>		60°,70°,60°&70° HEMI HANGERS - LONG EXT - RIGHT	
1F,2A,3-6,7A,8	107774	COMP BNT LONG EXT ASM 13" W R	Right- 70D- 13" W- LONG
1F,2B,3-6,7A,8	107775	COMP BNT LONG EXT ASM 14" W R	Right- 70D- 14" W- LONG
1F,2C,3-6,7B,8	107776	COMP BNT LONG EXT ASM 15" W R	Right- 70D- 15" W- LONG
1F,2D,3-6,7B,8	107777	COMP BNT LONG EXT ASM 16" W R	Right- 70D- 16" W- LONG
1F,2E,3-6,7C,8	107778	COMP BNT LONG EXT ASM 17" W R	Right- 70D- 17" W- LONG
1F,2F,3-6,7C,8	107779	COMP BNT LONG EXT ASM 18" W R	Right- 70D- 18" W- LONG
1F,2G,3-6,7D,8	107780	COMP BNT LONG EXT ASM 19 & 20"W R	Right- 70D- 19 & 20" W- LONG
1F,2H,3-6,7D,8	111532	COMP BNT LONG EXT ASM 21 & 22"W R	Right- 70D- 21 & 22" W- LONG
>>>>		60°,70°,60°&70° HEMI HANGERS - LONG EXT - LEFT	
1F,2A,3-6,7A,8	107781	COMP BNT LONG EXT ASM 13" W L	Left- 70D- 13 W- LONG
1F,2B,3-6,7A,8	107782	COMP BNT LONG EXT ASM 14" W L	Left- 70D- 14 W- LONG
1F,2C,3-6,7B,8	107783	COMP BNT LONG EXT ASM 15" W L	Left- 70D- 15 W- LONG
1F,2D,3-6,7B,8	107784	COMP BNT LONG EXT ASM 16" W L	Left- 70D- 16 W- LONG
1F,2E,3-6,7C,8	107785	COMP BNT LONG EXT ASM 17" W L	Left- 70D- 17 W- LONG
1F,2F,3-6,7C,8	107786	COMP BNT LONG EXT ASM 18" W L	Left- 70D- 18 W- LONG
1F,2G,3-6,7D,8	107787	COMP BNT LONG EXT ASM 19 & 20"W L	Left- 70D- 19 & 20" W- LONG
1F,2H,3-6,7D,8	111533	COMP BNT LONG EXT ASM 21 & 22"W L	Left- 70D- 21 & 22" W- LONG
>>>>		60°&70° HEMI HANGER SHORT EXT- RIGHT	
1G,2A,3-6,7A,8	129724	CMP FT BNT KIT SHT HNGR 13W R	Right-Hemi-13W; add Ext behind the Hemi
1G,2B,3-6,7A,8	129726	CMP FT BNT KIT SHT HNGR 14W R	Right-Hemi-14W; add Ext behind the Hemi
1G,2C,3-6,7B,8	129728	CMP FT BNT KIT SHT HNGR 15W R	Right-Hemi-15W; add Ext behind the Hemi
1G,2D,3-6,7B,8	129730	CMP FT BNT KIT SHT HNGR 16W R	Right-Hemi-16W; add Ext behind the Hemi
1G,2E,3-6,7C,8	129732	CMP FT BNT KIT SHT HNGR 17W R	Right-Hemi-17W; add Ext behind the Hemi
1G,2F,3-6,7C,8	129734	CMP FT BNT KIT SHT HNGR 18W R	Right-Hemi-18W; add Ext behind the Hemi
1G,2G,3-6,7D,8	129736	CMP FT BNT KIT SHT HNGR 19-20W R	Right-Hemi-19-20W; add Ext behind the Hemi
1G,2H,3-6,7D,8	129738	CMP FT BNT KIT SHT HNGR 21-22W R	Right-Hemi-21-22W; add Ext behind the Hemi
>>>>		60°&70° HEMI HANGER SHORT EXT- LEFT	
1G,2A,3-6,7A,8	129725	CMP FT BNT KIT SHT HNGR 13W L	Left-Hemi-13W; add Ext behind the Hemi
1G,2B,3-6,7A,8	129727	CMP FT BNT KIT SHT HNGR 14W L	Left-Hemi-14W; add Ext behind the Hemi
1G,2C,3-6,7B,8	129729	CMP FT BNT KIT SHT HNGR 15W L	Left-Hemi-15W; add Ext behind the Hemi
1G,2D,3-6,7B,8	129731	CMP FT BNT KIT SHT HNGR 16W L	Left-Hemi-16W; add Ext behind the Hemi
1G,2E,3-6,7C,8	129733	CMP FT BNT KIT SHT HNGR 17W L	Left-Hemi-17W; add Ext behind the Hemi
1G,2F,3-6,7C,8	129735	CMP FT BNT KIT SHT HNGR 18W L	Left-Hemi-18W; add Ext behind the Hemi
1G,2G,3-6,7D,8	129737	CMP FT BNT KIT SHT HNGR 19-20W L	Left-Hemi-19-20W; add Ext behind the Hemi
1G,2H,3-6,7D,8	129739	CMP FT BNT KIT SHT HNGR 21-22W L	Left-Hemi-21-22W; add Ext behind the Hemi
		Ship assembled part #	Use with multiple assemblies
	ASSY-HNG-FP	HANGER/FOOTPLATE ASSY REQUIRED	add with Hanger & Footplate kit

COMPOSITE ANGLE ADJUSTABLE FOOT PLATE

Note: Footplate Assemblies are set to footrest width; please see "Footplate Formula" table for seat width conversion.

Note: If using Short Ext Tube & Hemi Hanger with Composite Angle Adjustable Footplate use 1D (straight) .

Note: V Style Hangers are not available on Swing Away Style chairs effective 7/14/14; see the "Prior To" ordering guide for V Style footplate assemblies.

To have complete Footrest ship assembled, choose compatible Hanger + Footplate part numbers and add “ASSY-HNG-FP” to order

ADD INSET FORMULA
0” Inset (Seat Width) = Footrest Width
1” Inset (Seat Width) -2” = Footrest Width
2” Inset (Seat Width) -4” = Footrest Width
“V” Hanger (Seat Width) -4” = Footrest Width
Offset Hanger Receiver (Seat Width) +2” = Footrest Width
Flared Frame (Seat Width) = 2” = Footrest Width

FOOTPLATE MEASURING GUIDE

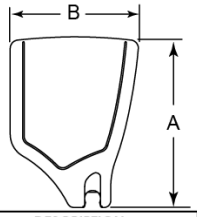

PART NO	DESCRIPTION	DIM -A-	DIM -B-
063216-006	FOOTPLATE COMPOSITE 157 R	6 1/8"	6"
063216-012	FOOTPLATE COMPOSITE 157 L	6 1/8"	6"
063216-015	FOOTPLATE COMPOSITE 170 R	6 5/8"	6"
063216-018	FOOTPLATE COMPOSITE 170 L	6 5/8"	6"
063216-005	FOOTPLATE COMPOSITE 182 R	7 1/8"	6"
063216-011	FOOTPLATE COMPOSITE 182 L	7 1/8"	6"
063216-014	FOOTPLATE COMPOSITE 195 R	7 5/8"	6"
063216-017	FOOTPLATE COMPOSITE 195 L	7 5/8"	6"
063216-004	FOOTPLATE COMPOSITE 207 R	8 1/8"	6"
063216-010	FOOTPLATE COMPOSITE 207 L	8 1/8"	6"
063216-013	FOOTPLATE COMPOSITE 220 R	8 5/8"	6 1/4"
063216-016	FOOTPLATE COMPOSITE 220 L	8 5/8"	6 1/4"
063216-003	FOOTPLATE COMPOSITE 232 R	9 1/8"	6 1/4"
063216-009	FOOTPLATE COMPOSITE 232 L	9 1/8"	6 1/4"
063216-002	FOOTPLATE COMPOSITE 257 R	10 1/8"	6 1/4"
063216-008	FOOTPLATE COMPOSITE 257 L	10 1/8"	6 1/4"
063216-001	FOOTPLATE COMPOSITE 282 R	11 1/8"	6 1/4"
063216-007	FOOTPLATE COMPOSITE 282 L	11 1/8"	6 1/4"

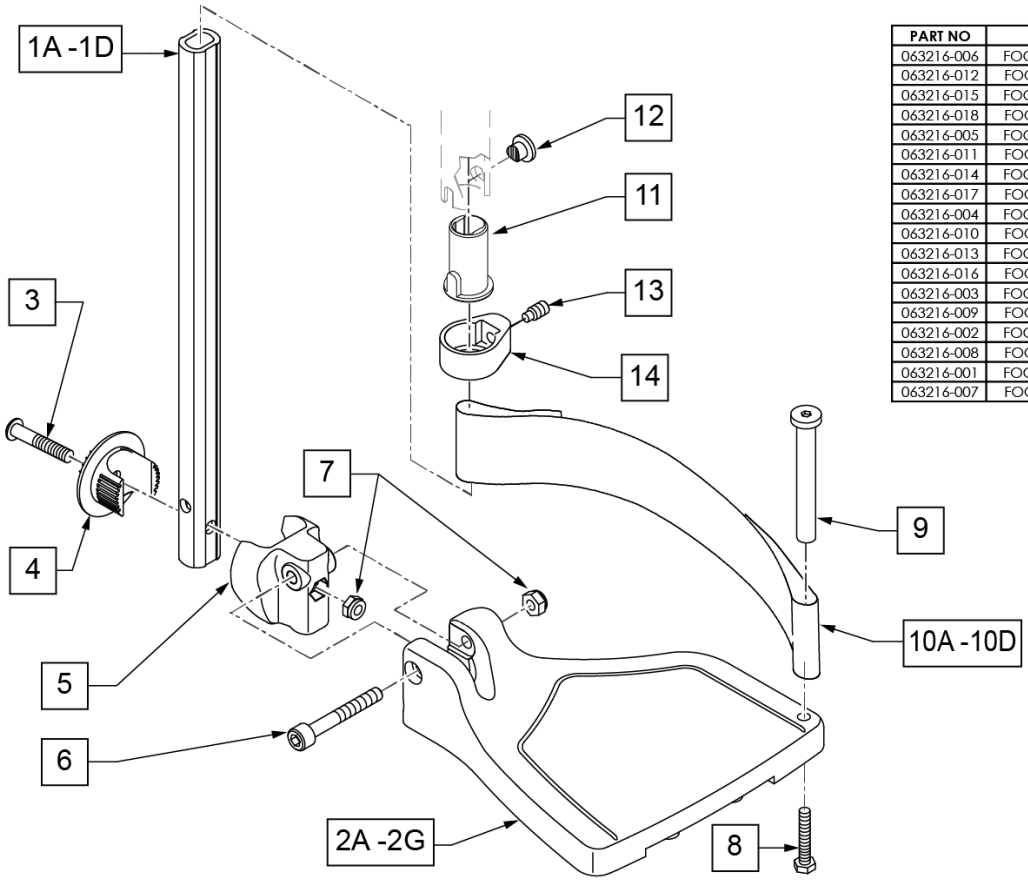

Pos.	Item Number	Description	Remarks
1A,6,7	120660	SHT STRT EXT COMP HDWR	
1B,6,7	120661	MED STRT EXT COMP HDWR	
1C,6,7	120662	LNG STRT EXT COMP HDWR	
1D	128079	TUBE FTRST EXT STRGHT SHT HEMI	Use for Hemi Ext Tube option
2A	063216-006	COMPOSITE FOOTPLATE RIGHT	RIGHT 15" Footrest Width

Pos.	Item Number	Description	Remarks
2A	063216-012	COMPOSITE FOOTPLATE LEFT	LEFT 15" Footrest Width
2B	063216-015	COMPOSITE FOOTPLATE RIGHT	RIGHT 16" Footrest Width
2B	063216-018	COMPOSITE FOOTPLATE LEFT	LEFT 16" Footrest Width
2C	063216-005	COMPOSITE FOOTPLATE RIGHT	RIGHT 17" Footrest Width
2C	063216-011	COMPOSITE FOOTPLATE LEFT	LEFT 17" Footrest Width
2D	063216-014	COMPOSITE FOOTPLATE RIGHT	RIGHT 18" Footrest Width
2D	063216-017	COMPOSITE FOOTPLATE LEFT	LEFT 18" Footrest Width
2E	063216-004	COMPOSITE FOOTPLATE RIGHT	RIGHT 19" Footrest Width
2E	063216-010	COMPOSITE FOOTPLATE LEFT	LEFT 19" Footrest Width
2F	063216-013	COMPOSITE FOOTPLATE RIGHT	RIGHT 20" Footrest Width
2F	063216-016	COMPOSITE FOOTPLATE LEFT	LEFT 20" Footrest Width
2G	063216-003	COMPOSITE FOOTPLATE RIGHT	RIGHT 21" & 22" Footrest Width
2G	063216-009	COMPOSITE FOOTPLATE LEFT	LEFT 21" & 22" Footrest Width
3	108233	BHCS M6 X 1 X 40	
4	054242	ANGLE COVER	
5	054241	ANGLE SEGMENT	
6	103175	SHCS M6 X 1 X 40 INORG	
7	132626	NUT AUTOMATION M6 X 1.0	
8	102268-001	HHCS M6X1X25	Inserted in bottom of footplate.
9	104328	HEEL LOOP PEG	
10A	104380-001	ADJUSTABLE FOOT REST STRAP	15" Footrest Width
10B	104380-002	ADJUSTABLE FOOT REST STRAP	16" Footrest Width
10C	104380-003	ADJUSTABLE FOOT REST STRAP	17-18" Footrest Width
10D	104380-004	ADJUSTABLE FOOT REST STRAP	19-22" Footrest Width
11	104160	BUSHING FOOTREST	
11-14	107485	FOOTREST CLAMP ASSM	
>>>>		60,70,80 HANGERS - SHORT EXT - RIGHT	
1A,2A,3-10A	107816	CAA STRT SHT EXT ASM 15W R	Right- 15 W- SHORT
1A,2B,3-10B	107817	CAA STRT SHT EXT ASM 16W R	Right- 16 W- SHORT
1A,2C,3-10B	107818	CAA STRT SHT EXT ASM 17W R	Right- 17 W- SHORT
1A,2D,3-10C	107819	CAA STRT SHT EXT ASM 18W R	Right- 18 W- SHORT
1A,2E,3-10C	107820	CAA STRT SHT EXT ASM 19W R	Right- 19 W- SHORT
1A,2F,3-10D	107821	CAA STRT SHT EXT ASM 20W R	Right- 20 W- SHORT
1A,2G,3-10D	107822	CAA STRT SHT EXT ASM 21&22W R	Right- 21&22 W- SHORT
>>>>		60,70,80 HANGERS - SHORT EXT - LEFT	
1A,2A,3-10A	107823	CAA STRT SHT EXT ASM 15W L	Left- 15 W- SHORT
1A,2B,3-10B	107824	CAA STRT SHT EXT ASM 16W L	Left- 16 W- SHORT
1A,2C,3-10B	107825	CAA STRT SHT EXT ASM 17W L	Left- 17 W- SHORT
1A,2D,3-10C	107826	CAA STRT SHT EXT ASM 18W L	Left- 18 W- SHORT
1A,2E,3-10C	107827	CAA STRT SHT EXT ASM 19W L	Left- 19 W- SHORT
1A,2F,3-10D	107828	CAA STRT SHT EXT ASM 20W L	Left- 20 W- SHORT
1A,2G,3-10D	107829	CAA STRT SHT EXT ASM 21&22W L	Left- 21&22 W- SHORT
>>>>		60,70,80& 60,70 HEMI HANGER- RIGHT	
1B,2A,3-10A	107830	CAA STRT MED EXT ASM 15W R	Right- 15 W- MED
1B,2B,3-10B	107831	CAA STRT MED EXT ASM 16W R	Right- 16 W- MED
1B,2C,3-10B	107832	CAA STRT MED EXT ASM 17W R	Right- 17 W- MED
1B,2D,3-10C	107833	CAA STRT MED EXT ASM 18W R	Right- 18 W- MED
1B,2E,3-10C	107834	CAA STRT MED EXT ASM 19W R	Right- 19 W- MED
1B,2F,3-10D	107835	CAA STRT MED EXT ASM 20W R	Right- 20 W- MED
1B,2G,3-10D	107836	CAA STRT MED EXT ASM 21&22W R	Right- 21&22 W- MED
>>>>		60,70,80& 60,70 HEMI HANGER- LEFT	
1B,2A,3-10A	107837	CAA STRT MED EXT ASM 15W L	Left- 15 W- MED
1B,2B,3-10B	107838	CAA STRT MED EXT ASM 16W L	Left- 16 W- MED
1B,2C,3-10B	107839	CAA STRT MED EXT ASM 17W L	Left- 17 W- MED
1B,2D,3-10C	107840	CAA STRT MED EXT ASM 18W L	Left- 18 W- MED
1B,2E,3-10C	107841	CAA STRT MED EXT ASM 19W L	Left- 19 W- MED

Pos.	Item Number	Description	Remarks
1B,2F,3-10D	107842	CAA STRT MED EXT ASM 20W L	Left- 20 W- MED
1B,2G,3-10D	107843	CAA STRT MED EXT ASM 21&22W L	Left- 21&22 W- MED
>>>>		60,70,80& 60,70 HEMI HANGER- RIGHT	
1C,2A,3-10A	107844	CAA STRT LNG EXT ASM 15W R	Right- 15 W- LONG
1C,2B,3-10B	107845	CAA STRT LNG EXT ASM 16W R	Right- 16 W- LONG
1C,2C,3-10B	107846	CAA STRT LNG EXT ASM 17W R	Right- 17 W- LONG
1C,2D,3-10C	107847	CAA STRT LNG EXT ASM 18W R	Right- 18 W- LONG
1C,2E,3-10C	107848	CAA STRT LNG EXT ASM 19W R	Right- 19 W- LONG
1C,2F,3-10D	107849	CAA STRT LNG EXT ASM 20W R	Right- 20 W- LONG
1C,2G,3-10D	107850	CAA STRT LNG EXT ASM 21&22W R	Right- 21&22 W- LONG
>>>>		60,70,80& 60,70 HEMI HANGER- LEFT	
1C,2A,3-10A	107851	CAA STRT LNG EXT ASM 15W L	Left- 15 W- LONG
1C,2B,3-10B	107852	CAA STRT LNG EXT ASM 16W L	Left- 16 W- LONG
1C,2C,3-10B	107853	CAA STRT LNG EXT ASM 17W L	Left- 17 W- LONG
1C,2D,3-10C	107854	CAA STRT LNG EXT ASM 18W L	Left- 18 W- LONG
1C,2E,3-10C	107855	CAA STRT LNG EXT ASM 19W L	Left- 19 W- LONG
1C,2F,3-10D	107856	CAA STRT LNG EXT ASM 20W L	Left- 20 W- LONG
1C,2G,3-10D	107857	CAA STRT LNG EXT ASM 21&22W L	Left- 21&22 W- LONG
>>>>		60&70 HEMI HANGERS- SHORT EXT- RIGHT	
1D,2A,3-10A	129710	CAA FOOT KIT SHT HNGR 15W R	Right-Hemi-15W; add Ext behind the Hemi
1D,2B,3-10B	129712	CAA FOOT KIT SHT HNGR 16W R	Right-Hemi-16W; add Ext behind the Hemi
1D,2C,3-10B	129714	CAA FOOT KIT SHT HNGR 17W R	Right-Hemi-17W; add Ext behind the Hemi
1D,2D,3-10C	129716	CAA FOOT KIT SHT HNGR 18W R	Right-Hemi-18W; add Ext behind the Hemi
1D,2E,3-10C	129718	CAA FOOT KIT SHT HNGR 19W R	Right-Hemi-19W; add Ext behind the Hemi
1D,2F,3-10D	129720	CAA FOOT KIT SHT HNGR 20W R	Right-Hemi-20W; add Ext behind the Hemi
1D,2G,3-10D	129722	CAA FOOT KIT SHT HNGR 22W R	Right-Hemi-21&22W; add Ext behind the Hemi
>>>>		60&70 HEMI HANGERS- SHORT EXT - LEFT	
1D,2A,3-10A	129711	CAA FOOT KIT SHT HNGR 15W L	Left-Hemi-15W; add Ext behind the Hemi
1D,2B,3-10B	129713	CAA FOOT KIT SHT HNGR 16W L	Left-Hemi-16W; add Ext behind the Hemi
1D,2C,3-10B	129715	CAA FOOT KIT SHT HNGR 17W L	Left-Hemi-17W; add Ext behind the Hemi
1D,2D,3-10C	129717	CAA FOOT KIT SHT HNGR 18W L	Left-Hemi-18W; add Ext behind the Hemi
1D,2E,3-10C	129719	CAA FOOT KIT SHT HNGR 19W L	Left-Hemi-19W; add Ext behind the Hemi
1D,2F,3-10D	129721	CAA FOOT KIT SHT HNGR 20W L	Left-Hemi-20W; add Ext behind the Hemi
1D,2G,3-10D	129723	CAA FOOT KIT SHT HNGR 22W L	Left-Hemi-21&22W; add Ext behind the Hemi
		Ship assembled part #	Use with multiple assemblies
	ASSY-HNG-FP	HANGER/FOOTPLATE ASSY REQUIRED	add with Hanger & Footplate kit

Note: Footplate Assemblies are set to footrest width; please see "Footplate Formula" table for seat width conversion.

Note: If using Short Ext Tube & Hemi Hanger with Adult Angle Adjustable Footplate use 1D (straight) .

Note: V Style Hangers are not available on Swing Away Style chairs effective 7/14/14; see the "Prior To" ordering guide for V Style footplate assemblies.

Note: for QX Series or SR45 footplate replacement parts see the ordering guide marked specifically for these two models in the informations panel.

Note: if chair has High Mount Ext Tubes or if switching to High Mount Ext Tubes, see AAA Footplate w/ High Mount Extension Ordering Guide.

[02/19/2020]

To have complete Footrest ship assembled, choose compatible Hanger + Footplate part numbers and add "ASSY-HNG-FP" to order

ADD INSET FORMULA
0" Inset (Seat Width) = Footrest Width
1" Inset (Seat Width) -2" = Footrest Width
2" Inset (Seat Width) -4" = Footrest Width
"V" Hanger (Seat Width) -4" = Footrest Width
Offset Hanger Receiver (Seat Width) +2" = Footrest Width
Flared Frame (Seat Width) = 2" = Footrest Width

MEASURING GUIDE

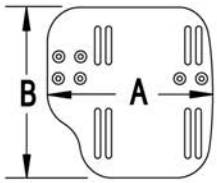

CHAIR WIDTH	"A"	"B"
10" - 11"	3 1/2"	7 1/4"
12" - 13"	4 1/2"	7 3/4"
14" - 15"	5 1/2"	7 3/4"
16" - 17"	6 1/2"	7 3/4"
18" - 20"	7 1/2"	7 3/4"

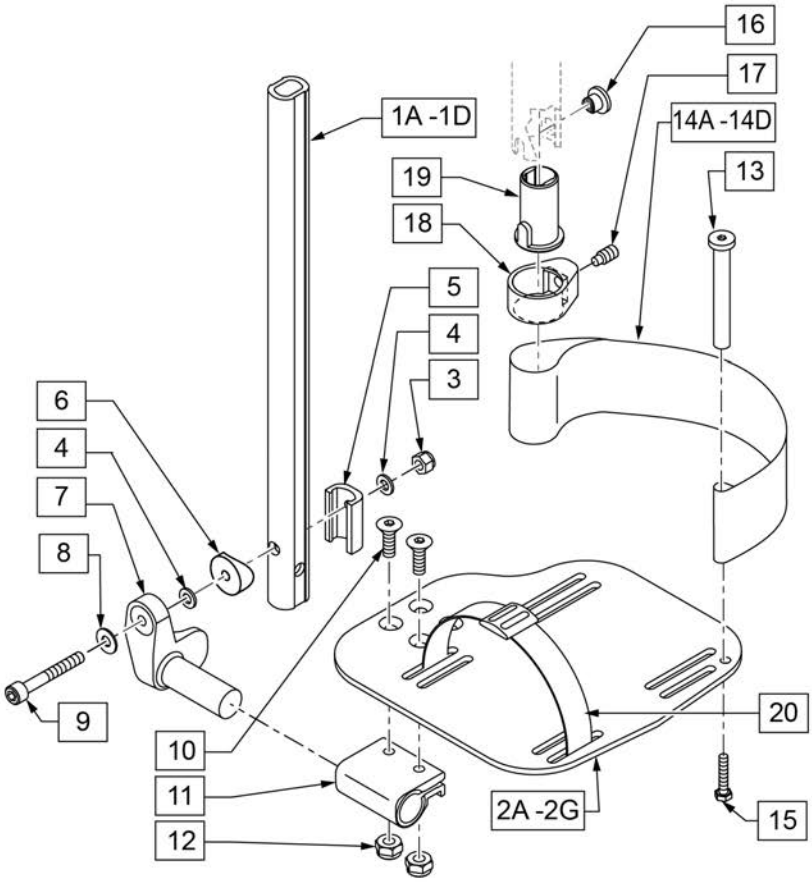

21 EXT MNT HARDWARE 1 SIDE

ITEM #	ILLUSTRATION	DESCRIPTION	QTY
3		NUT AUTOMATION M6 X 1.0 ROHS	1
4		WASHER FLAT THIN AN 1/4	2
5		HANGER EXTENSION SADDLE	1
6		3/4" SADDLE 1" OD	1
8		WASHER FLAT SAE 1/4 ROHS	1
9		SHCS M6X1X45 12MM PART THD	1

Pos.	Item Number	Description	Remarks
1A,3-6,8,9	120670	SHT STRT EXT AAA HDWR	
1B,3-6,8,9	120671	MED STRT EXT AAA HDWR	
1C,3-6,8,9	120672	LNG STRT EXT AAA HDWR	
1D	128079	TUBE FTRST EXT STRGHT SHT HEMI	Use for Hemi Ext Tube option
2A	500656	ADULT ANG ADJ F/PLT 10/11" R	RIGHT 10-11" Footrest Width
2A	500657	ADULT ANG ADJ F/PLT 10/11" L	LEFT 10-11" Footrest Width
2B	500658	ADULT ANG ADJ F/PLT 12/13" R	RIGHT 12-13" Footrest Width
2B	500659	ADULT ANG ADJ F/PLT 12/13" L	LEFT 12-13" Footrest Width
2C	500660	ADLT ANGL ADJ F/PLT 14/15	RIGHT 14-15" Footrest Width
2C	500661	ADLT ANGL ADJ F/PLT 14/15	LEFT 14-15" Footrest Width
2D	500662	ADLT ANGL ADJ F/PLT 16/17	RIGHT 16-17" Footrest Width
2D	500663	ADLT ANGL ADJ F/PLT 16/17	LEFT 16-17" Footrest Width
2E	500664	ADLT ANGL ADJ F/PLT 18-20	RIGHT 18-22" Footrest Width
2E	500665	ADLT ANGL ADJ F/PLT 18-20	LEFT 18-22" Footrest Width
3	132626	NUT AUTOMATION M6 X 1.0	
4	106944	WASHER FLAT THIN AN 1/4 ROHS	
5	107199	HANGER EXTENSION SADDLE	
6	561055	3/4" SADDLE 1" OD	
7	541002	FTRST MOUNTING BRKT-3/8 RAD R	RIGHT

Pos.	Item Number	Description	Remarks
7	541003	FTRST MOUNTING BRKT-3/8 RAD L	LEFT
8	106945	WASHER FLAT SAE 1/4 ROHS	
9	104399	SHCS M6X1X45 12 MM PART THD	
10	106978	FHCS 1/4-28 X 7/8 ROHS	
11	550350	3/4" CLMP ADJ FT PLT	
12	106935	NUT NYLOCK THIN 1/4-28 ROHS	
13	104328	POST HEEL LOOP	
14A	104380-001	ADJUSTABLE FOOT REST STRAP	12 - 14" WIDE
14B	104380-002	ADJUSTABLE FOOT REST STRAP	15 - 16" WIDE
14C	104380-003	ADJUSTABLE FOOT REST STRAP	17 - 18" WIDE
14D	104380-004	ADJUSTABLE FOOT REST STRAP	19 - 20" WIDE
15	102268-001	HHCS M6 X 1 X 25	
16-19	107485	FOOTREST CLAMP ASSM	
20	740260	TOE-ANKLE STRAP ADJ ADULT FOOTPLATE	
21	120659	EXT MNT HARDWARE 1 SIDE	
>>>>		60,70,80 STD HANGERS - RIGHT	
1A,2B,3-14A,15	111534	AAA STRT SHT EXT ASM 12-13" W R	Right- 12-13" W- SHORT
1A,2C,3-14B,15	107928	AAA STRT SHT EXT ASM 14-15" W R	Right- 14-15" W- SHORT
1A,2D,3-14C,15	107930	AAA STRT SHT EXT ASM 16-17" W R	Right- 16-17" W- SHORT
1A,2E,3-14D,15	107932	AAA STRT SHT EXT ASM 18-22" W R	Right- 18-22" W- SHORT
>>>>		60,70,80 STD HANGERS - LEFT	
1A,2B,3-14A,15	111535	AAA STRT SHT EXT ASM 12-13" W L	Left- 12-13" W- SHORT
1A,2C,3-14B,15	107935	AAA STRT SHT EXT ASM 14" W L	Left- 14-15" W- SHORT
1A,2D,3-14C,15	107937	AAA STRT SHT EXT ASM 16" W L	Left- 16-17" W- SHORT
1A,2E,3-14D,15	107939	AAA STRT SHT EXT ASM 18" W L	Left- 18-22" W- SHORT
>>>>		60,70,80 & 60,70 HEMI HANGERS - RIGHT	
1B,2B,3-14A,15	111536	AAA STRT MED EXT ASM 12-13" W R	Right- 12-13" W- MED
1B,2C,3-14B,15	107942	AAA STRT MED EXT ASM 14-15" W R	Right- 14-15" W- MED
1B,2D,3-14C,15	107944	AAA STRT MED EXT ASM 16-17" W R	Right- 16-17" W- MED
1B,2E,3-14D,15	107946	AAA STRT MED EXT ASM 18-22" W R	Right- 18-22" W- MED
>>>>		60,70,80 & 60,70 HEMI HANGERS - LEFT	
1B,2B,3-14A,15	111537	AAA STRT MED EXT ASM 12-13" W L	Left- 12-13" W- MED
1B,2C,3-14B,15	107949	AAA STRT MED EXT ASM 14" W L	Left- 14-15" W- MED
1B,2D,3-14C,15	107951	AAA STRT MED EXT ASM 16" W L	Left- 16-17" W- MED
1B,2E,3-14D,15	107953	AAA STRT MED EXT ASM 18" W L	Left- 18-22" W- MED
>>>>		60,70,80 & 60,70 HEMI HANGERS - RIGHT	
1C,2B,3-14A,15	111538	AAA STRT LNG EXT ASM 12-13" W R	Right- 12-13" W- LONG
1C,2C,3-14B,15	107956	AAA STRT LNG EXT ASM 14 -15" W R	Right- 14-15" W- LONG
1C,2D,3-14C,15	107958	AAA STRT LNG EXT ASM 16 -17" W R	Right- 16-17" W- LONG
1C,2E,3-14D,15	107960	AAA STRT LNG EXT ASM 18 -22" W R	Right- 18-22" W- LONG
>>>>		60,70,80 & 60,70 HEMI HANGERS - LEFT	
1C,2B,3-14A,15	111539	AAA STRT LNG EXT ASM 12-13" W L	Left- 12-13" W- LONG
1C,2C,3-14B,15	107963	AAA STRT LNG EXT ASM 14W L	Left- 14-15" W- LONG
1C,2D,3-14C,15	107965	AAA STRT LNG EXT ASM 16W L	Left- 16-17" W- LONG
1C,2E,3-14D,15	107968	AAA STRT LNG EXT ASM 18W L	Left- 18-22" W- LONG
>>>>		60&70 HEMI HANGERS - SHORT EXT - RIGHT	
1D,2B,3-14A,15	129756	AAA FOOT KIT SHT HNGR 12W R	Right- 12-13" W- SHORT; add Ext behind the Hemi
1D,2C,3-14B,15	129758	AAA FOOT KIT SHT HNGR 14W R	Right- 14-15" W- SHORT; add Ext behind the Hemi
1D,2D,3-14C,15	129760	AAA FOOT KIT SHT HNGR 16W R	Right- 16-17" W- SHORT; add Ext behind the Hemi
1D,2E,3-14D,15	129762	AAA FOOT KIT SHT HNGR 18W R	Right- 18-22" W- SHORT; add Ext behind the Hemi
>>>>		60&70 HEMI HANGERS - SHORT EXT -LEFT	
1D,2B,3-14A,15	129757	AAA FOOT KIT SHT HNGR 12W L	Left- 12-13" W-SHORT; add Ext behind the Hemi
1D,2C,3-14B,15	129759	AAA FOOT KIT SHT HNGR 14W L	Left- 14-15" W- SHORT; add Ext behind the Hemi
1D,2D,3-14C,15	129761	AAA FOOT KIT SHT HNGR 16W L	Left- 16-17" W- SHORT; add Ext behind the Hemi
1D,2E,3-14D,15	129763	AAA FOOT KIT SHT HNGR 18W L	Left- 18-22" W- SHORT; add Ext behind the Hemi
		Ship assembled part #	Use with multiple assemblies

Pos.	Item Number	Description	Remarks
	ASSY-HNG-FP	HANGER/FOOTPLATE ASSY REQUIRED	add with Hanger & Footplate kit

KIDS ANGLE ADJUSTABLE FOOTPLATE EXT MOUNT

[08/22/2019]

Note: Footplate Assemblies are set to footrest width; please see "Footplate Formula" table for seat width conversion.

Note: V Style Hangers are not available on Swing Away Style chairs effective 7/14/14; see the "Prior To" ordering guide for V Style footplate assemblies.

Note: Zippie Iris (ZRS&ZRSE) and Zippie TS (Z1A&Z1SE) only use Straight Extension Tube.

Note: if chair has High Mount Ext Tubes or if switching to High Mount Ext Tubes, see KAA Footplate w/ High Mount Extension Ordering Guide.

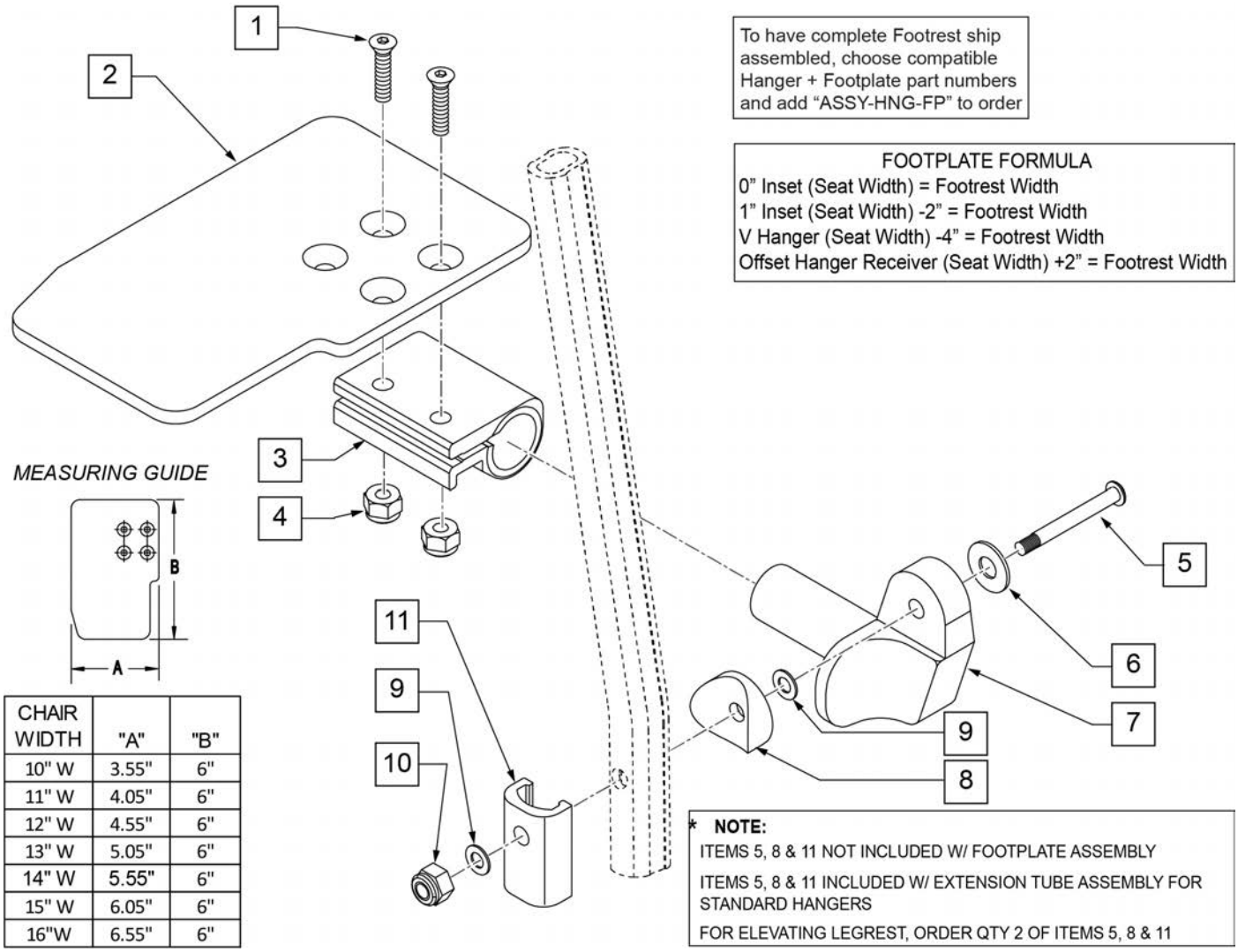

CHAIR WIDTH	"A"	"B"
10" W	3.55"	6"
11" W	4.05"	6"
12" W	4.55"	6"
13" W	5.05"	6"
14" W	5.55"	6"
15" W	6.05"	6"
16"W	6.55"	6"

Pos.	Item Number	Description	Remarks
1	106978	FHCS 1/4 -28 x 7/8 ROHS	

Pos.	Item Number	Description	Remarks
2	500635	KIDS ANGL ADJ F/PLT 10" R	Right
2	500636	KIDS ANGL ADJ F/PLT 10" L	Left
2	500637	KIDS ANGL ADJ F/PLT 11" R	Right
2	500638	KIDS ANGL ADJ F/PLT 11" L	Left
2	500639	KIDS ANGL ADJ F/PLT 12" R	Right
2	500640	KIDS ANGL ADJ F/PLT 12" L	Left
2	500641	KIDS ANGL ADJ F/PLT 13" R	Right
2	500642	KIDS ANGL ADJ F/PLT 13" L	Left
2	500643	KIDS ANGL ADJ F/PLT 14" R	Right
2	500644	KIDS ANGL ADJ F/PLT 14" L	Left
2	500645	KIDS ANGL ADJ F/PLT 15" R	Right
2	500646	KIDS ANGL ADJ F/PLT 15" L	Left
2	500647	KIDS ANGL ADJ F/PLT 16" R	Right
2	500648	KIDS ANGL ADJ F/PLT 16" L	Left
3	550350	3/4" CLAMP ADJ FOOTPLATE	
4	106935	NUT NYLOCK THIN 1/4 -28 ROHS	
5	106962	1/4-28 x 1 3/4 BH C/S BLK ZN (D2 EXTENSION TUBES)	
5	226167	1/4-28 x 1.625 BH C/S BLK (ROUND EXTENSION TUBES)	
6	106945	1/4 SAE WASHER	
7	541002	FTRST MOUNTING BRKT-3/8 RAD R	
7	541003	FTRST MOUNTING BRKT-3/8 RAD L	
8	561055	3/4" SADDLE 1" OD	
9	106944	WASHER FLAT THIN AN 1/4 ROHS	
10	106941	NUT AUTOMATION 1/4 -28 ROHS	
11	483720	HANGER EXTENSION SADDLE LONG	Use with Double D Ext Tube
1-4,6,7,9,10	828850	KIDS ANG ADJ F/PLT EXT-MNT 10"R	Right
1-4,6,7,9,10	828851	KIDS ANG ADJ F/PLT EXT-MNT 10"L	Left
1-4,6,7,9,10	828852	KIDS ANG ADJ F/PLT EXT-MNT 11"R	Right
1-4,6,7,9,10	828853	KIDS ANG ADJ F/PLT EXT-MNT 11"L	Left
1-4,6,7,9,10	828854	KIDS ANG ADJ F/PLT EXT-MNT 12"R	Right
1-4,6,7,9,10	828855	KIDS ANG ADJ F/PLT EXT-MNT 12"L	Left
1-4,6,7,9,10	828856	KIDS ANG ADJ F/PLT EXT-MNT 13"R	Right
1-4,6,7,9,10	828857	KIDS ANG ADJ F/PLT EXT-MNT 13"L	Left
1-4,6,7,9,10	828858	KIDS ANG ADJ F/PLT EXT-MNT 14"R	Right
1-4,6,7,9,10	828859	KIDS ANG ADJ F/PLT EXT-MNT 14"L	Left
1-4,6,7,9,10	828860	KIDS ANG ADJ F/PLT EXT-MNT 15"R	Right
1-4,6,7,9,10	828861	KIDS ANG ADJ F/PLT EXT-MNT 15"L	Left
1-4,6,7,9,10	828862	KIDS ANG ADJ F/PLT EXT-MNT 16"R	Right
1-4,6,7,9,10	828863	KIDS ANG ADJ F/PLT EXT-MNT 16"L	Left
1-4,6,7,9,10	921280	KIDS ANG ADJ F/PLT EXT-MNT 10"	Pair
1-4,6,7,9,10	921281	KIDS ANG ADJ F/PLT EXT-MNT 11"	Pair
1-4,6,7,9,10	921282	KIDS ANG ADJ F/PLT EXT-MNT 12"	Pair
1-4,6,7,9,10	921283	KIDS ANG ADJ F/PLT EXT-MNT 13"	Pair
1-4,6,7,9,10	921284	KIDS ANG ADJ F/PLT EXT-MNT 14"	Pair
1-4,6,7,9,10	921285	KIDS ANG ADJ F/PLT EXT-MNT 15"	Pair
1-4,6,7,9,10	921286	KIDS ANG ADJ F/PLT EXT-MNT 16"	Pair
		Ship assembled part #	Use with multiple assemblies
	ASSY-HNG-FP	HANGER/FOOTPLATE ASSY REQUIRED	add with Hanger & Footplate kit

ELR/ALR ALUMINUM FOOTPLATE

(02/11/2020)

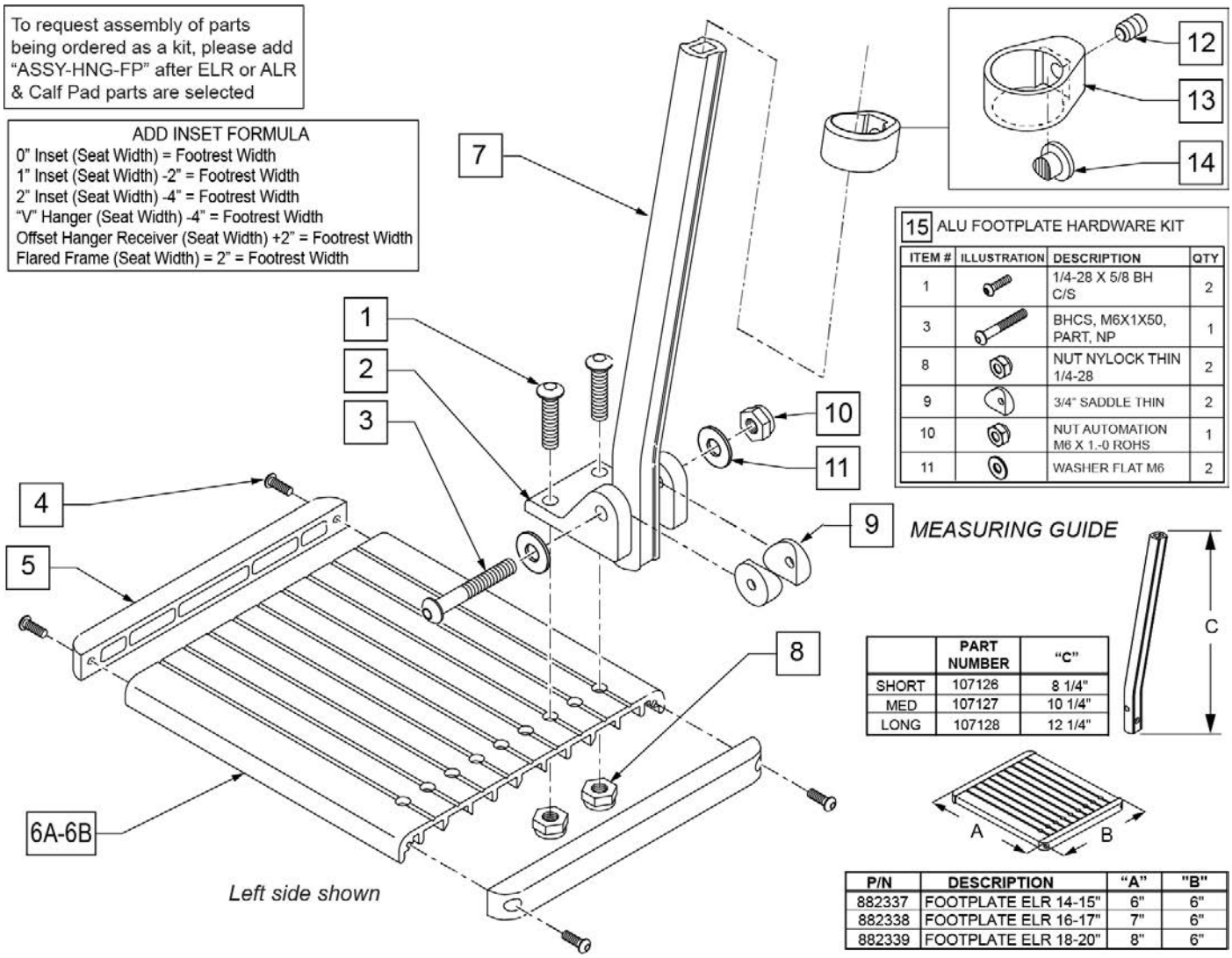

Pos.	Item Number	Description	Remarks
1	226090	1/4-28 x 5/8 BH C/S	
2	118093	BRACKET FOOTPLATE ALUM	
3	102262-008	BHCS M6 X 1 X 50 INORGANIC	
4	281043	#4 x 5/8 PAN PHIL S/TAP	
5	560101	END CAPS FOOTREST	
7	107126	SHORT BENT	
7	107127	MED BENT	
7	107128	LONG BENT	
7	128078	TUBE FOOTREST EXT SHT HEMI	Use for Hemi Extension option
8	106935	1/4-28 NYLOCK NUT THIN	
9	561003	3/4" SADDLE THIN	
10	132626	NUT AUTOMATION M6 X 1.0	
11	107383	WASHER FLAT M6 ROHS	
4,5,6A	882337	ELR FOOTPLATE ASSEMBLY 14 -15"	
4,5,6B	882338	ELR FOOTPLATE ASSEMBLY 16 -17"	
4,5,6C	882339	ELR FOOTPLATE ASSEMBLY 18 -20"	
12-14	119495	EXTENSION CLAMP KIT	
15	129775	ALU FOOTPLATE HDWARE KIT	Ext tube not included; bracket (118093) not included

Pos.	Item Number	Description	Remarks
		Ship assembled part #	Use with multiple assemblies
	ASSY-HNG-FP	HANGER/FOOTPLATE ASSY REQUIRED	add with Hanger & Footplate kit

Note: For installation instructions please see the informations section to the right of this parts page.

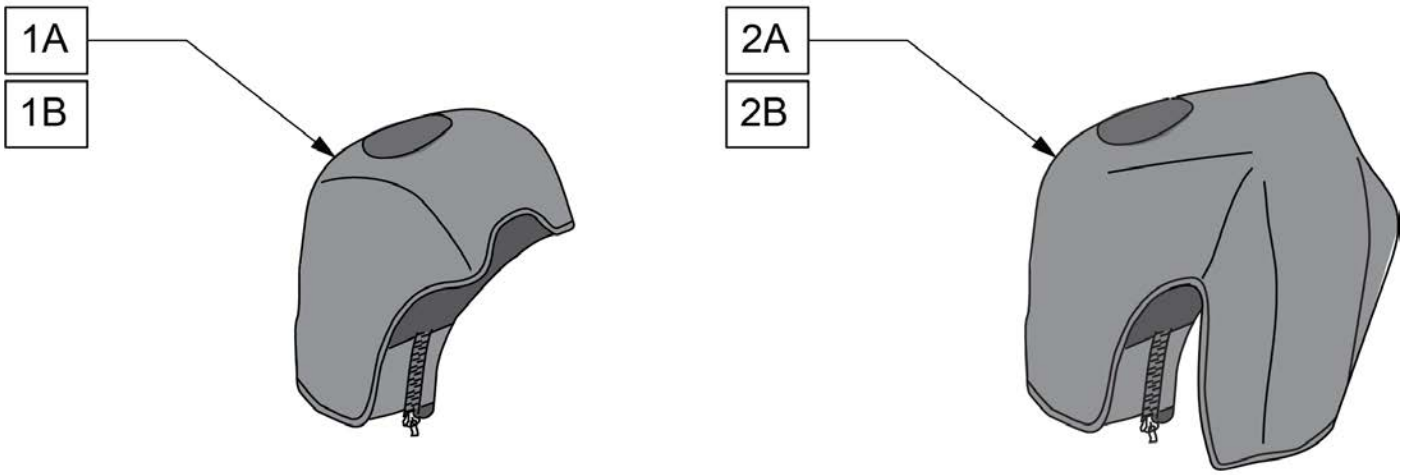

Pos.	Item Number	Description	Remarks
1A	163881	ELR NEOPRENE COVER PR	Pair
1B	163882	ELR GEL COVER PR	Pair
2A	163883	ALR NEOPRENE COVER PR	Pair
2B	163884	ALR GEL COVER PR	Pair

CONTRACTURE FOOTREST

NOTE: 20" WIDE FOOTPLATE AND COMPONENTS ARE ALSO USED FOR THE 21" AND 22" WIDTHS.

NOTE: WHEN RETRO-FITTING CONTRACTURE FOOTREST TO AN EXISTING IRIS CHAIR WITH S/N PREFIX CGT, NEW SEAT RAILS ARE REQUIRED. ITEM 520234 QUANTITY 2.

NOTE: WHEN RETRO-FITTING CONTRACTURE FOOTREST TO AN EXISTING IRIS CHAIR WITH S/N PREFIX IRS OR IRSE, NEW SEAT RAILS ARE REQUIRED. ITEM 105800-004 (NON-HEAVY DUTY) QUANTITY 2 OR 105800-008 (HEAVY DUTY) QUANTITY 2.

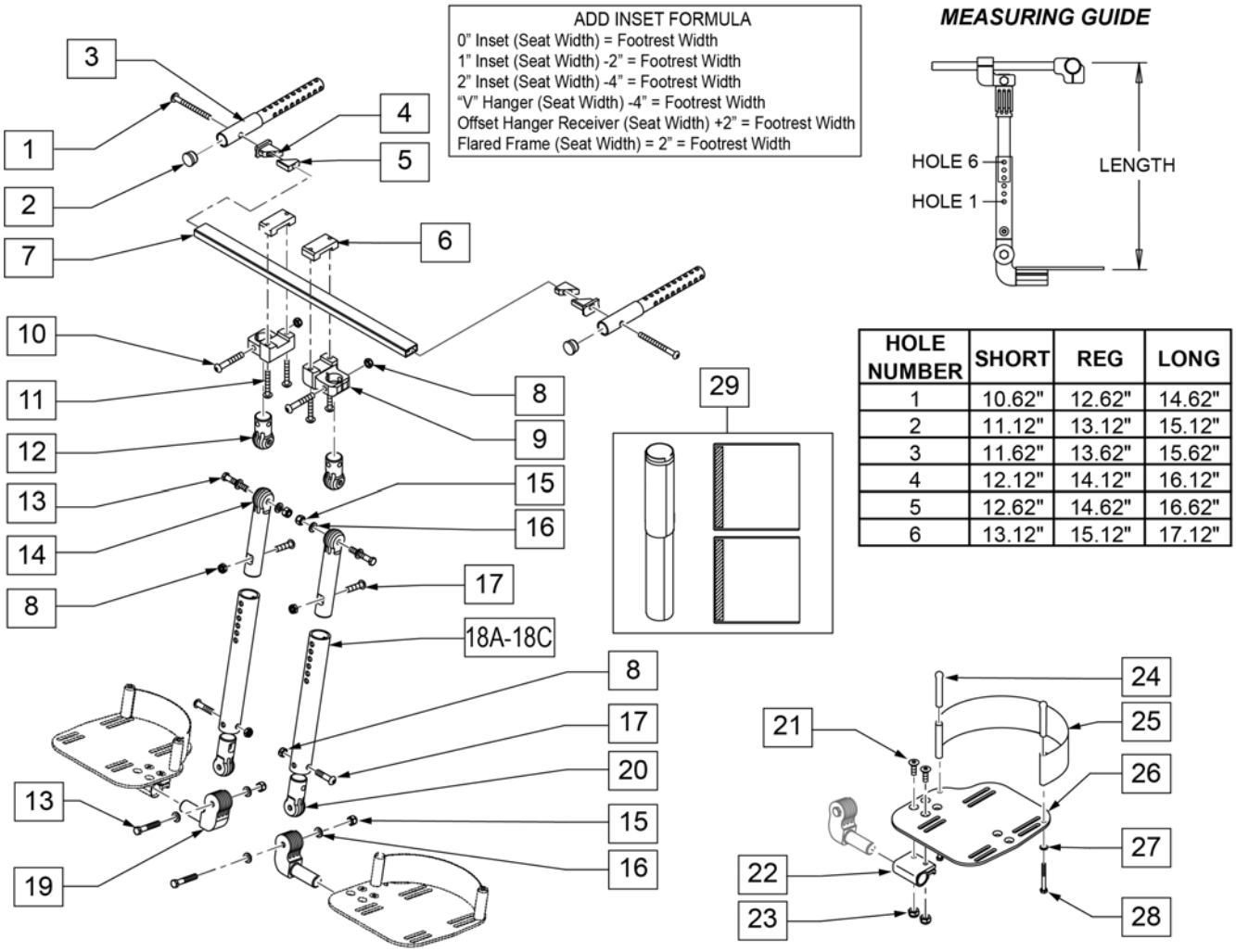

Pos.	Item Number	Description	Remarks
1	107227	1/4 -28 x 2 1/2 BH C/S BLK	
2	561002	1 INSERT PLUG .083	
3	540597	WELDMENT CONTRACTURE FOOTREST	
4	500792	CONTRACTURE FOOTREST TAB BODY	
5	500791	CONTRACTURE FOOTREST TAB SLIDE	
6	550465	CLAMP TOP QTS	

Pos.	Item Number	Description	Remarks
7	521460	CONTRACTURE FOOTREST RAIL 14"	
7	521461	CONTRACTURE FOOTREST RAIL 15"	
7	521462	CONTRACTURE FOOTREST RAIL 16"	
7	521463	CONTRACTURE FOOTREST RAIL 17"	
7	521464	CONTRACTURE FOOTREST RAIL 18"	
7	521465	CONTRACTURE FOOTREST RAIL 19"	
7	521466	CONTRACTURE FOOTREST RAIL 20"	
7	521467	CONTRACTURE FOOTREST RAIL 21"	
7	521468	CONTRACTURE FOOTREST RAIL 22"	
8	202117	5/16-18 NYLOCK NUT THICK BLK	
9	483180	OFFSET CLAMP BODY QTS	
10	106983	BHCS 5/16 -18 x 2 SHOULDER ROHS	
11	106962	BHCS 1/4-28 X 1-3/4 ROHS	
12	483191	EXTERIOR LOCKING JOINT QTS	
13	222235	5/16-18 x 1 3/4 HEX C/S BLK	
14	503005	ADJUSTMENT LOCKING JOINT	
15	202117	5/16-18 NYLOCK NUT THICK BLK	
16	265103	5/16 WASHER MED BLK LK SPLT	
17	222109	5/16-18 x 1 1/4 BH C/S BLK ZN	
18A	524041	SHORT CONTRACTURE FOOTREST MOUNT TUBE	10.5" -13"Leg Lengths
18B	524044	MEDIUM CONTRACTURE FOOTREST MOUNT TUBE	12.5" -15"Leg Lengths
18C	524045	CONTRACTURE FOOTREST MOUNT TUBE-LONG	14.5 -17"Leg Lengths
19	483189	FOOTREST JOINT QTS	
20	483181	INTERIOR LOCKING JOINT QTS	
21	106978	FHCS 1/4 -28 x 7/8 ROHS	
22	550350	3/4 CLAMP ADJUSTABLE FOOT PLATE	
23	106935	NUT NYLOCK THIN 1/4 -28 ROHS	
24	561040	HEEL LOOP PEG	
25	741130	HEEL LOOP MULTI-POSITION 14/15	
25	741131	HEEL LOOP MULTI-POSITION 16/17	
25	741132	HEEL LOOP MULTI-POSITION 18-20	
26A	500660	ADULT ANGLE ADJUSTABLE FOOT PLATE 14/15	RIGHT
26A	500661	ADULT ANGLE ADJUSTABLE FOOT PLATE 14/15	LEFT
26B	500662	ADULT ANGLE ADJUSTABLE FOOT PLATE 16/17	RIGHT
26B	500663	ADULT ANGLE ADJUSTABLE FOOT PLATE 16/17	LEFT
26C	500664	ADULT ANGLE ADJUSTABLE FOOT PLATE 18-20	RIGHT
26C	500665	ADULT ANGLE ADJUSTABLE FOOT PLATE 18-20	LEFT
27	106944	WASHER FLAT THIN AN 1/4 ROHS	
28	106958	HHCS 1/4 -28 x 1 ROHS	
29	731101	COVER PAD CONTRACTURE FOOT REST	
8, 12-20	888810	CONTRACTURE FOOT REST MOUNT TUBE ASSM-SHORT	SHORT
8, 12-20	888811	CONTRACTURE FOOT REST MOUNT TUBE ASSM-MED	MED
1-18A,19-29	921958	CONTRACTURE FOOT REST KIT IRIS 14 SHORT	
1-18B,19-29	921959	CONTRACTURE FOOT REST KIT IRIS 14 MED	
1-18C,19-29	921960	CONTRACTURE FOOT REST KIT IRIS 14" LONG	
1-18A,19-29	921961	CONTRACTURE FOOT REST KIT IRIS 15 SHORT	
1-18B,19-29	921962	CONTRACTURE FOOT REST KIT IRIS 15 MED	
1-18C,19-29	921963	CONTRACTURE FOOT REST KIT IRIS 15" LONG	
1-18A,19-29	921964	CONTRACTURE FOOT REST KIT IRIS 16 SHORT	
1-18B,19-29	921965	CONTRACTURE FOOT REST KIT IRIS 16 MED	
1-18C,19-29	921966	CONTRACTURE FOOT REST KIT IRIS 16" LONG	
1-18A,19-29	921967	CONTRACTURE FOOT REST KIT IRIS 17 SHORT	
1-18B,19-29	921968	CONTRACTURE FOOT REST KIT IRIS 17 MED	
1-18C,19-29	921969	CONTRACTURE FOOT REST KIT IRIS 17" LONG	
1-18A,19-29	921970	CONTRACTURE FOOT REST KIT IRIS 18 SHORT	
1-18B,19-29	921971	CONTRACTURE FOOT REST KIT IRIS 18 MED	

Pos.	Item Number	Description	Remarks
1-18C,19-29	921972	CONTRACTURE FOOT REST KIT IRIS 18" LONG	
1-18A,19-29	921973	CONTRACTURE FOOT REST KIT IRIS 19 SHORT	
1-18B,19-29	921974	CONTRACTURE FOOT REST KIT IRIS 19 MED	
1-18C,19-29	921975	CONTRACTURE FOOT REST KIT IRIS 19" LONG	
1-18A,19-29	921976	CONTRACTURE FOOT REST KIT IRIS 20 SHORT	
1-18B,19-29	921977	CONTRACTURE FOOT REST KIT IRIS 20 MED	
1-18C,19-29	921978	CONTRACTURE FOOT REST KIT IRIS 20" LONG	
1-18A,19-29	921979	CONTRACTURE FOOT REST KIT IRIS 21 SHORT	
1-18B,19-29	921984	CONTRACTURE FOOT REST KIT IRIS 21 MED	
1-18C,19-29	921985	CONTRACTURE FOOT REST KIT IRIS 21" LONG	
1-18A,19-29	921986	CONTRACTURE FOOT REST KIT IRIS 22 SHORT	
1-18B,19-29	921987	CONTRACTURE FOOT REST KIT IRIS 22 MED	
1-18C,19-29	921988	CONTRACTURE FOOT REST KIT IRIS 22" LONG	

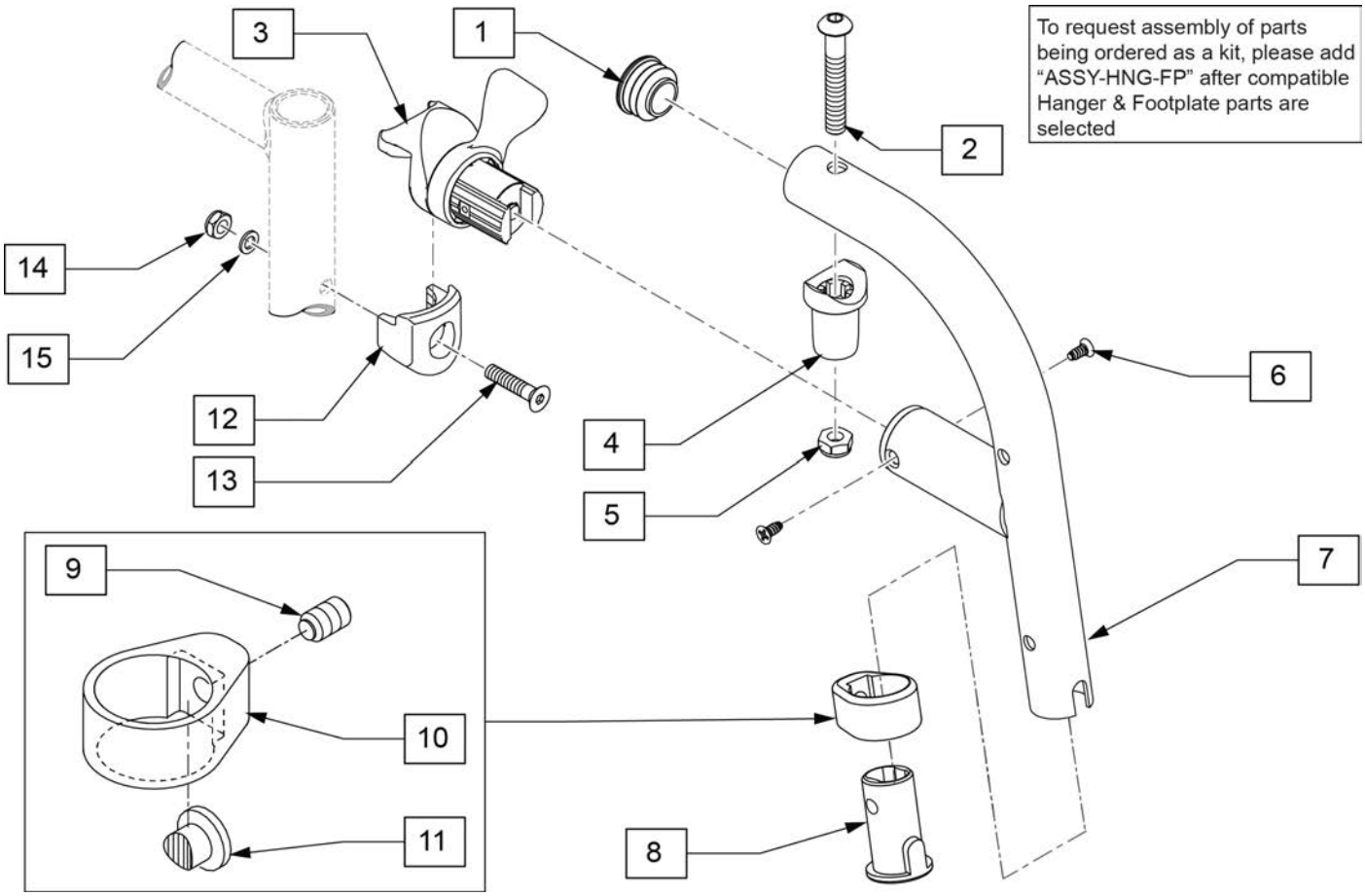

Pos.	Item Number	Description	Remarks
1	561062	1" INSERT PLUG .065 RIBS	
8	128357	BUSHING, FOOTREST, DIRECT	
13	103500-010	FHCSM6X1X35FULLNP	
14	104381	NUT HEX NYLOCK M6X1.0	
15	104414	WAVE WASHER 6 MM	
1,2,4,5	119518	PIVOT SADDLE KIT	
3,6	119509	HANGER LATCH ASSM W/HDWR L	Left
3,6	119510	HANGER LATCH ASSM W/HDWR R	Right
1-11	136186S	80D HANGER R EXT	Right-hangers that use extension
1-11	136187S	80D HANGER L EXT	Left-hangers that use extension
8-11	136188	FOOTREST CLAMP KIT	
12-15	119514	LATCH RECEIVER KIT	
		Ship assembled part #	Use with multiple assemblies
	ASSY-HNG-FP	HANGER/FOOTPLATE ASSY REQUIRED	add with Hanger & Footplate kit

Z-FINITY SWING I/O DIRECT MOUNT HANGERS

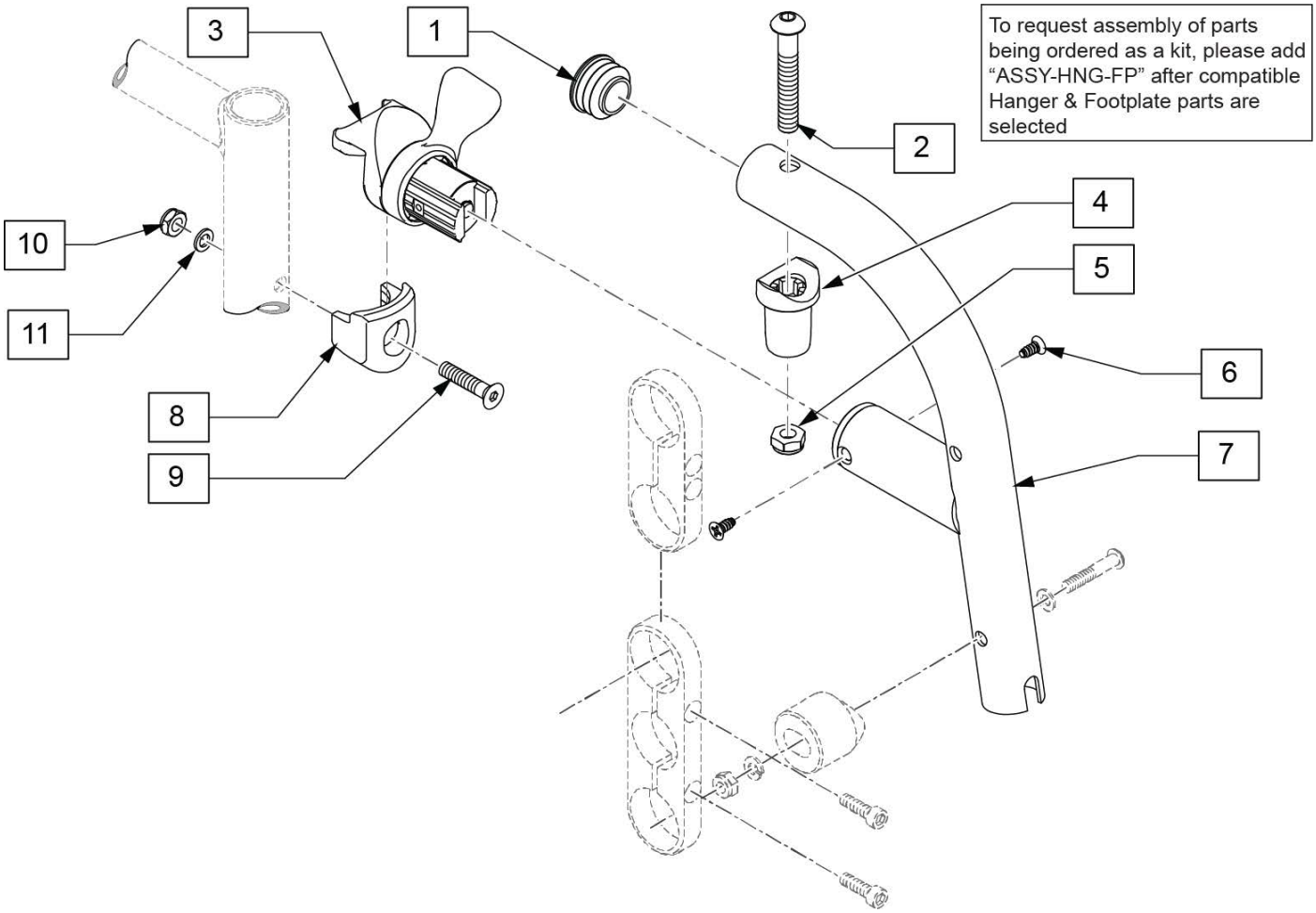

Pos.	Item Number	Description	Remarks
1	561062	1" INSERT PLUG .065 RIBS	
9	103500-010	FHCSM6X1X35FULLNP	
10	104381	NUT HEX NYLOCK M6X1.0	
11	104414	WAVE WASHER 6 MM	
1,2,4,5	119518	PIVOT SADDLE KIT	
3,6	119509	HANGER LATCH ASSM W/HDWR L	Left
3,6	119510	HANGER LATCH ASSM W/HDWR R	Right
1-7	136184	80D HANGER R DIRECT	Right
1-7	136185	80D HANGER L DIRECT	Left
8-11	119514	LATCH RECEIVER KIT	
		Ship assembled part #	Use with multiple assemblies
	ASSY-HNG-FP	HANGER/FOOTPLATE ASSY REQUIRED	add with Hanger & Footplate kit

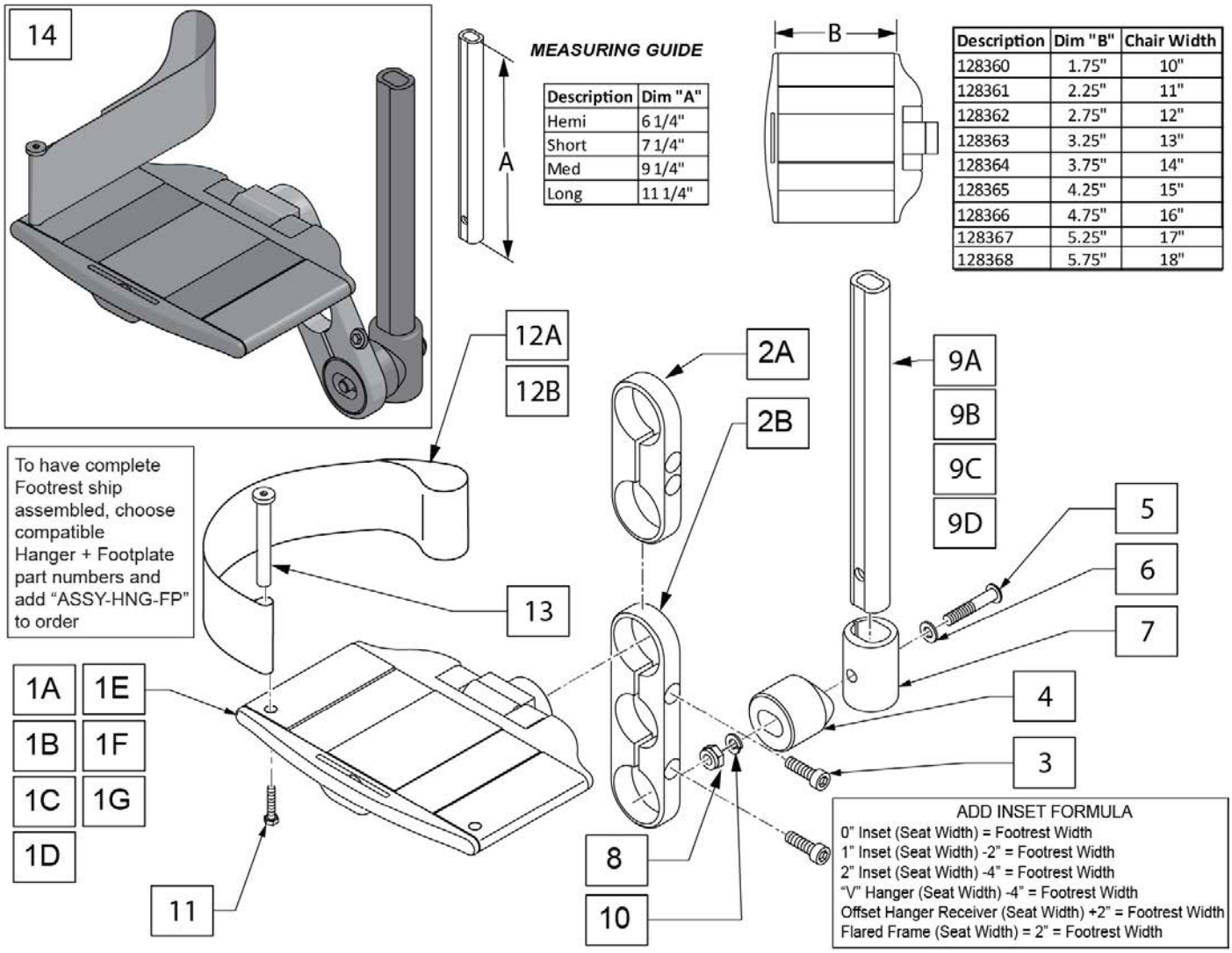

Description	Dim "A"
Hemi	6 1/4"
Short	7 1/4"
Med	9 1/4"
Long	11 1/4"

Description	Dim "B"	Chair Width
128360	1.75"	10"
128361	2.25"	11"
128362	2.75"	12"
128363	3.25"	13"
128364	3.75"	14"
128365	4.25"	15"
128366	4.75"	16"
128367	5.25"	17"
128368	5.75"	18"

Pos.	Item Number	Description	Remarks
1A	128360	10" ALUM DIVIDED FTRST	
1B	128361	11" ALUM DIVIDED FTRST	
1C	128362	12" ALUM DIVIDED FTRST	
1D	128363	13" ALUM DIVIDED FTRST	
1E	128364	14" ALUM DIVIDED FTRST	
1F	128365	15" ALUM DIVIDED FTRST	
1G	128366	16" ALUM DIVIDED FTRST	
1H	128367	17" ALUM DIVIDED FTRST	
1I	128368	18" ALUM DIVIDED FTRST	
2A	128402	SHORT FOOTPLATE CLAMP	
2B	128403	LONG FOOTPLATE CLAMP	
3	102263-003	SHCS, M6X1X25, FULL, PL	
4	129058	HALF EXTEN TUBE ADAPTOR	
5	106964	BHCS 1/4-28 X 2	
6	107383	WASHER FLAT M6	
7	128229	EXTEN MOUNT LOWER ADAPTOR	
8	106934	NUT NYLOCK 1/4-28	
9A	129054	EXT TUBE FTREST SRT HEMI	

Pos.	Item Number	Description	Remarks
9B	129055	EXT TUBE FTREST SRT SHT	
9C	129056	EXT TUBE FTREST SRT MED	
9D	129057	COMBO EXT TUBE LNG	
10	107367	WASHER LOCK HI COLLAR 1/4 ROHS	
11	102268-001	HHCS M6 X 1 X 25	
12A	104380-001	ADJ FOOTREST STRAP 14W	10" to 14" wide
12B	104380-002	ADJ FOOTREST STRAP 15-16W	15' to 18" wide
13	104328	HEEL LOOP PEG	
		HEMI EXTENSION / 2 HOLE CLAMP	
14	136189	10" FTPLT HEMI SHORT RT	Right
14	136190	10" FTPLT HEMI SHORT LFT	Left
14	136191	11" FTPLT HEMI SHORT RT	Right
14	136192	11" FTPLT HEMI SHORT LFT	Left
14	136193	12" FTPLT HEMI SHORT RT	Right
14	136194	12" FTPLT HEMI SHORT LFT	Left
14	136195	13" FTPLT HEMI SHORT RT	Right
14	136196	13" FTPLT HEMI SHORT LFT	Left
14	136197	14" FTPLT HEMI SHORT RT	Right
14	136198	14" FTPLT HEMI SHORT LFT	Left
14	136199	15" FTPLT HEMI SHORT RT	Right
14	136200	15" FTPLT HEMI SHORT LFT	Left
14	136201	16" FTPLT HEMI SHORT RT	Right
14	136202	16" FTPLT HEMI SHORT LFT	Left
14	136203	17" FTPLT HEMI SHORT RT	Right
14	136204	17" FTPLT HEMI SHORT LFT	Left
14	136205	18" FTPLT HEMI SHORT RT	Right
14	136206	18" FTPLT HEMI SHORT LFT	Left
		SHORT EXTENSION / 2 HOLE CLAMP	
14	136207	10" FTPLT SHORT SHORT RT	Right
14	136208	10" FTPLT SHORT SHORT LFT	Left
14	136209	11" FTPLT SHORT SHORT RT	Right
14	136210	11" FTPLT SHORT SHORT LFT	Left
14	136211	12" FTPLT SHORT SHORT RT	Right
14	136212	12" FTPLT SHORT SHORT LFT	Left
14	136213	13" FTPLT SHORT SHORT RT	Right
14	136214	13" FTPLT SHORT SHORT LFT	Left
14	136215	14" FTPLT SHORT SHORT RT	Right
14	136216	14" FTPLT SHORT SHORT LFT	Left
14	136217	15" FTPLT SHORT SHORT RT	Right
14	136218	15" FTPLT SHORT SHORT LFT	Left
14	136219	16" FTPLT SHORT SHORT RT	Right
14	136220	16" FTPLT SHORT SHORT LFT	Left
14	136221	17" FTPLT SHORT SHORT RT	Right
14	136222	17" FTPLT SHORT SHORT LFT	Left
14	136223	18" FTPLT SHORT SHORT RT	Right
14	136224	18" FTPLT SHORT SHORT LFT	Left
		MED EXTENSION / 2 HOLE CLAMP	
14	136225	10" FTPLT MED SHORT RT	Right
14	136226	10" FTPLT MED SHORT LFT	Left
14	136227	11" FTPLT MED SHORT RT	Right
14	136228	11" FTPLT MED SHORT LFT	Left
14	136229	12" FTPLT MED SHORT RT	Right
14	136230	12" FTPLT MED SHORT LFT	Left
14	136231	13" FTPLT MED SHORT RT	Right
14	136232	13" FTPLT MED SHORT LFT	Left
14	136233	14" FTPLT MED SHORT RT	Right

Pos.	Item Number	Description	Remarks
14	136234	14" FTPLT MED SHORT LFT	Left
14	136235	15" FTPLT MED SHORT RT	Right
14	136236	15" FTPLT MED SHORT LFT	Left
14	136237	16" FTPLT MED SHORT RT	Right
14	136238	16" FTPLT MED SHORT LFT	Left
14	136239	17" FTPLT MED SHORT RT	Right
14	136240	17" FTPLT MED SHORT LFT	Left
14	136241	18" FTPLT MED SHORT RT	Right
14	136242	18" FTPLT MED SHORT LFT	Left
		LONG EXTENSION / 2 HOLE CLAMP	
14	136243	10" FTPLT LONG SHORT RT	Right
14	136244	10" FTPLT LONG SHORT LFT	Left
14	136245	11" FTPLT LONG SHORT RT	Right
14	136246	11" FTPLT LONG SHORT LFT	Left
14	136247	12" FTPLT LONG SHORT RT	Right
14	136248	12" FTPLT LONG SHORT LFT	Left
14	136249	13" FTPLT LONG SHORT RT	Right
14	136250	13" FTPLT LONG SHORT LFT	Left
14	136251	14" FTPLT LONG SHORT RT	Right
14	136252	14" FTPLT LONG SHORT LFT	Left
14	136253	15" FTPLT LONG SHORT RT	Right
14	136254	15" FTPLT LONG SHORT LFT	Left
14	136255	16" FTPLT LONG SHORT RT	Right
14	136256	16" FTPLT LONG SHORT LFT	Left
14	136257	17" FTPLT LONG SHORT RT	Right
14	136258	17" FTPLT LONG SHORT LFT	Left
14	136259	18" FTPLT LONG SHORT RT	Right
14	136260	18" FTPLT LONG SHORT LFT	Left
		HEMI EXTENSION / 3 HOLE CLAMP	
14	136261	10" FTPLT HEMI LONG RT	Right
14	136262	10" FTPLT HEMI LONG LFT	Left
14	136263	11" FTPLT HEMI LONG RT	Right
14	136264	11" FTPLT HEMI LONG LFT	Left
14	136265	12" FTPLT HEMI LONG RT	Right
14	136266	12" FTPLT HEMI LONG LFT	Left
14	136267	13" FTPLT HEMI LONG RT	Right
14	136268	13" FTPLT HEMI LONG LFT	Left
14	136269	14" FTPLT HEMI LONG RT	Right
14	136270	14" FTPLT HEMI LONG LFT	Left
14	136271	15" FTPLT HEMI LONG RT	Right
14	136272	15" FTPLT HEMI LONG LFT	Left
14	136273	16" FTPLT HEMI LONG RT	Right
14	136274	16" FTPLT HEMI LONG LFT	Left
14	136275	17" FTPLT HEMI LONG RT	Right
14	136276	17" FTPLT HEMI LONG LFT	Left
14	136277	18" FTPLT HEMI LONG RT	Right
14	136278	18" FTPLT HEMI LONG LFT	Left
		SHORT EXTENSION / 3 HOLE CLAMP	
14	136279	10" FTPLT SHORT LONG RT	Right
14	136280	10" FTPLT SHORT LONG LFT	Left
14	136281	11" FTPLT SHORT LONG RT	Right
14	136282	11" FTPLT SHORT LONG LFT	Left
14	136283	12" FTPLT SHORT LONG RT	Right
14	163269	12" FTPLT SHORT LONG LFT	Left
14	136284	13" FTPLT SHORT LONG RT	Right
14	136285	13" FTPLT SHORT LONG LFT	Left

Pos.	Item Number	Description	Remarks
14	136286	14" FTPLT SHORT LONG RT	Right
14	136287	14" FTPLT SHORT LONG LFT	Left
14	136288	15" FTPLT SHORT LONG RT	Right
14	136289	15" FTPLT SHORT LONG LFT	Left
14	136290	16" FTPLT SHORT LONG RT	Right
14	136291	16" FTPLT SHORT LONG LFT	Left
14	136292	17" FTPLT SHORT LONG RT	Right
14	136293	17" FTPLT SHORT LONG LFT	Left
14	136294	18" FTPLT SHORT LONG RT	Right
14	136295	18" FTPLT SHORT LONG LFT	Left
		MED EXTENSION / 3 HOLE CLAMP	
14	136296	10" FTPLT MED LONG RT	Right
14	136297	10" FTPLT MED LONG LFT	Left
14	136298	11" FTPLT MED LONG RT	Right
14	136299	11" FTPLT MED LONG LFT	Left
14	136300	12" FTPLT MED LONG RT	Right
14	136301	12" FTPLT MED LONG LFT	Left
14	136302	13" FTPLT MED LONG RT	Right
14	136303	13" FTPLT MED LONG LFT	Left
14	136304	14" FTPLT MED LONG RT	Right
14	136305	14" FTPLT MED LONG LFT	Left
14	136306	15" FTPLT MED LONG RT	Right
14	136307	15" FTPLT MED LONG LFT	Left
14	136308	16" FTPLT MED LONG RT	Right
14	136309	16" FTPLT MED LONG LFT	Left
14	136310	17" FTPLT MED LONG RT	Right
14	136311	17" FTPLT MED LONG LFT	Left
14	136312	18" FTPLT MED LONG RT	Right
14	136313	18" FTPLT MED LONG LFT	Left
		LONG EXTENSION / 3 HOLE CLAMP	
14	136314	10" FTPLT LONG LONG RT	Right
14	136315	10" FTPLT LONG LONG LFT	Left
14	136316	11" FTPLT LONG LONG RT	Right
14	136317	11" FTPLT LONG LONG LFT	Left
14	136318	12" FTPLT LONG LONG RT	Right
14	136319	12" FTPLT LONG LONG LFT	Left
14	136320	13" FTPLT LONG LONG RT	Right
14	136321	13" FTPLT LONG LONG LFT	Left
14	136322	14" FTPLT LONG LONG RT	Right
14	136323	14" FTPLT LONG LONG LFT	Left
14	136324	15" FTPLT LONG LONG RT	Right
14	136325	15" FTPLT LONG LONG LFT	Left
14	136326	16" FTPLT LONG LONG RT	Right
14	136327	16" FTPLT LONG LONG LFT	Left
14	136328	17" FTPLT LONG LONG RT	Right
14	136329	17" FTPLT LONG LONG LFT	Left
14	136330	18" FTPLT LONG LONG RT	Right
14	136331	18" FTPLT LONG LONG LFT	Left
		Ship assembled part #	Use with multiple assemblies
	ASSY-HNG-FP	HANGER/FOOTPLATE ASSY REQUIRED	add with Hanger & Footplate kit

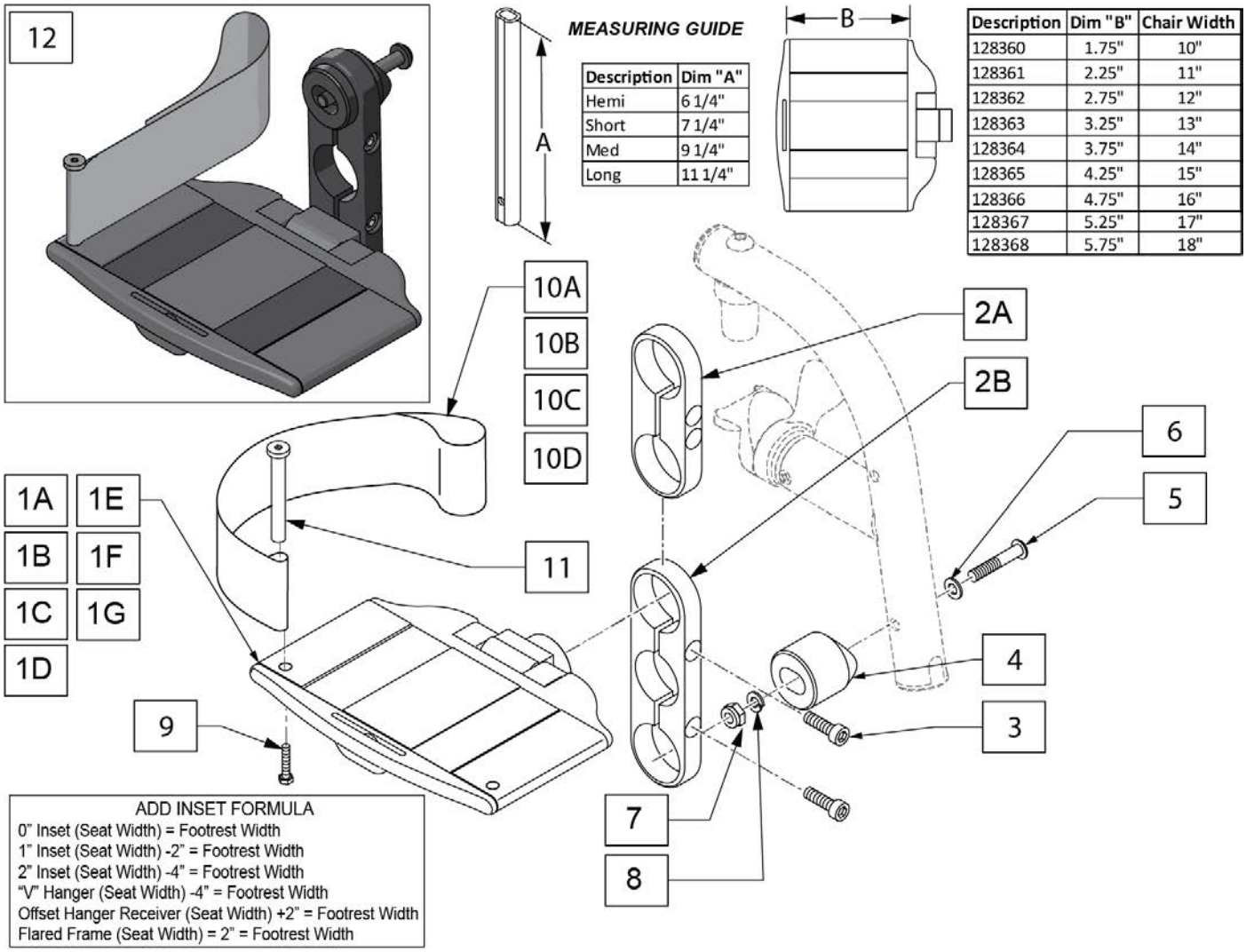

Description	Dim "A"
Hemi	6 1/4"
Short	7 1/4"
Med	9 1/4"
Long	11 1/4"

Description	Dim "B"	Chair Width
128360	1.75"	10"
128361	2.25"	11"
128362	2.75"	12"
128363	3.25"	13"
128364	3.75"	14"
128365	4.25"	15"
128366	4.75"	16"
128367	5.25"	17"
128368	5.75"	18"

Pos.	Item Number	Description	Remarks
1A	128360	10" ALUM DIVIDED FTRST	
1B	128361	11" ALUM DIVIDED FTRST	
1C	128362	12" ALUM DIVIDED FTRST	
1D	128363	13" ALUM DIVIDED FTRST	
1E	128364	14" ALUM DIVIDED FTRST	
1F	128365	15" ALUM DIVIDED FTRST	
1G	128366	16" ALUM DIVIDED FTRST	
1H	128367	17" ALUM DIVIDED FTRST	
1I	128368	18" ALUM DIVIDED FTRST	
2A	128402	SHORT FOOTPLATE CLAMP	
2B	128403	LONG FOOTPLATE CLAMP	
3	102263-003	SHCS, M6X1X25, FULL, PL	
4	129058	HALF EXTEN TUBE ADAPTOR	
5	106964	BHCS 1/4-28 X 2	
6	107383	WASHER FLAT M6	
7	106934	NUT NYLOCK 1/4-28	
8	107367	WASHER LOCK HI COLLAR 1/4 ROHS	
9	102268-001	HHCS M6 X 1 X 25	

Pos.	Item Number	Description	Remarks
10A	104380-001	ADJ FOOTREST STRAP 14W	10" to 14" wide
10B	104380-002	ADJ FOOTREST STRAP 15-16W	15' to 18" wide
11	104328	HEEL LOOP PEG	
		2 HOLE CLAMP NO EXT	
12	136332	10" FTPLT SHORT RT	Right
12	136333	10" FTPLT SHORT LFT	Left
12	136334	11" FTPLT SHORT RT	Right
12	136335	11" FTPLT SHORT LFT	Left
12	136336	12" FTPLT SHORT RT	Right
12	136337	12" FTPLT SHORT LFT	Left
12	136338	13" FTPLT SHORT RT	Right
12	136339	13" FTPLT SHORT LFT	Left
12	136340	14" FTPLT SHORT RT	Right
12	136341	14" FTPLT SHORT LFT	Left
12	136342	15" FTPLT SHORT RT	Right
12	136343	15" FTPLT SHORT LFT	Left
12	136344	16" FTPLT SHORT RT	Right
12	136345	16" FTPLT SHORT LFT	Left
12	136346	17" FTPLT SHORT RT	Right
12	136347	17" FTPLT SHORT LFT	Left
12	136348	18" FTPLT SHORT RT	Right
12	136349	18" FTPLT SHORT LFT	Left
		3 HOLE CLAMP NO EXT	
12	136350	10" FTPLT LONG RT	Right
12	136351	10" FTPLT LONG LFT	Left
12	136352	11" FTPLT LONG RT	Right
12	136353	11" FTPLT LONG LFT	Left
12	136354	12" FTPLT LONG RT	Right
12	136355	12" FTPLT LONG LFT	Left
12	136356	13" FTPLT LONG RT	Right
12	136357	13" FTPLT LONG LFT	Left
12	136358	14" FTPLT LONG RT	Right
12	136359	14" FTPLT LONG LFT	Left
12	136360	15" FTPLT LONG RT	Right
12	136361	15" FTPLT LONG LFT	Left
12	136362	16" FTPLT LONG RT	Right
12	136363	16" FTPLT LONG LFT	Left
12	136364	17" FTPLT LONG RT	Right
12	136365	17" FTPLT LONG LFT	Left
12	136366	18" FTPLT LONG RT	Right
12	136367	18" FTPLT LONG LFT	Left
		Ship assembled part #	Use with multiple assemblies
	ASSY-HNG-FP	HANGER/FOOTPLATE ASSY REQUIRED	add with Hanger & Footplate kit

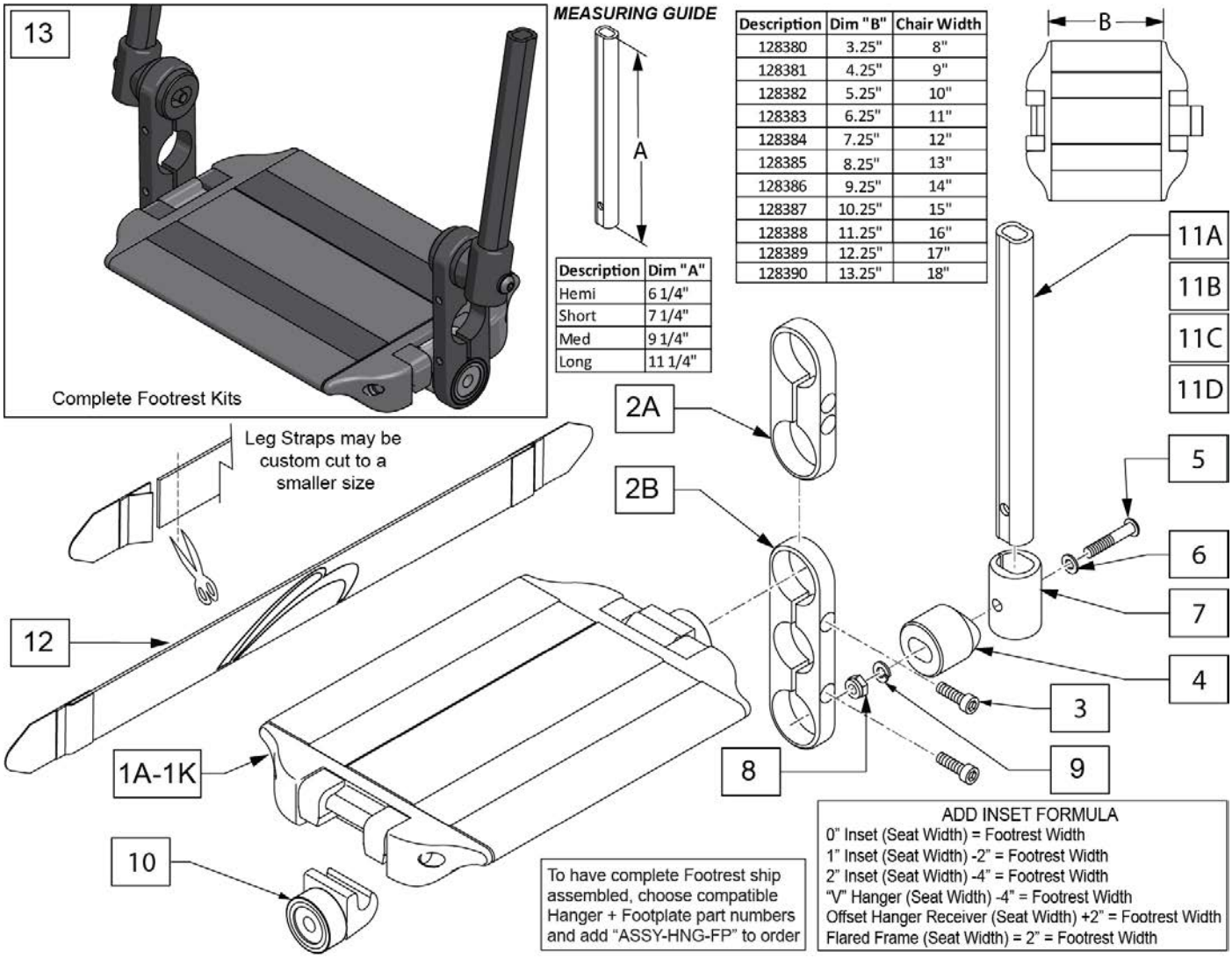

Description	Dim "A"
Hemi	6 1/4"
Short	7 1/4"
Med	9 1/4"
Long	11 1/4"

Description	Dim "B"	Chair Width
128380	3.25"	8"
128381	4.25"	9"
128382	5.25"	10"
128383	6.25"	11"
128384	7.25"	12"
128385	8.25"	13"
128386	9.25"	14"
128387	10.25"	15"
128388	11.25"	16"
128389	12.25"	17"
128390	13.25"	18"

Pos.	Item Number	Description	Remarks
1A	128380	8" ALUM CONT FTRST	
1B	128381	9" ALUM CONT FTRST	
1C	128382	10" ALUM CONT FTRST	
1D	128383	11" ALUM CONT FTRST	
1E	128384	12" ALUM CONT FTRST	
1F	128385	13" ALUM CONT FTRST	
1G	128386	14" ALUM CONT FTRST	
1H	128387	15" ALUM CONT FTRST	
1I	128388	16" ALUM CONT FTRST	
1J	128389	17" ALUM CONT FTRST	
1K	128390	18" ALUM CONT FTRST	
2A	128402	SHORT FOOTPLATE CLAMP	
2B	128403	LONG FOOTPLATE CLAMP	
3	102263-003	SHCS, M6X1X25, FULL, PL	
4	129058	HALF EXTEN TUBE ADAPTOR	
5	106964	BHCS 1/4-28 X 2	
6	107383	WASHER FLAT M6	
7	128229	EXTEN MOUNT LOWER ADAPTOR	

Pos.	Item Number	Description	Remarks
8	106935	NUT NYLOCK THIN 1/4-28	
9	107367	WASHER LOCK HI COLLAR 1/4	
10	128410	ALUM CONT FTRST CATCH	
11A	129054	EXT TUBE FTREST SRT HEMI	
11B	129055	EXT TUBE FTREST SRT SHT	
11C	129056	EXT TUBE FTREST SRT MED	
11D	129057	COMBO EXT TUBE LNG	
12	113255	LEG STRAP 11"-12" BLK	
12	113256	LEG STRAP 13"-15" BLK	
12	113257	LEG STRAP 16"-18" BLK	
		HEMI EXTENSION / 2 HOLE CLAMP	
13	136368	10" FLIP-UP FTPLT HEMI SHORT	
13	136369	11" FLIP-UP FTPLT HEMI SHORT	
13	136370	12" FLIP-UP FTPLT HEMI SHORT	
13	136371	13" FLIP-UP FTPLT HEMI SHORT	
13	136372	14" FLIP-UP FTPLT HEMI SHORT	
13	136373	15" FLIP-UP FTPLT HEMI SHORT	
13	136374	16" FLIP-UP FTPLT HEMI SHORT	
13	136375	17" FLIP-UP FTPLT HEMI SHORT	
13	136376	18" FLIP-UP FTPLT HEMI SHORT	
		SHORT EXTENSION / 2 HOLE CLAMP	
13	136377	10" FLIP-UP FTPLT SHORT SHORT	
13	136378	11" FLIP-UP FTPLT SHORT SHORT	
13	136379	12" FLIP-UP FTPLT SHORT SHORT	
13	136380	13" FLIP-UP FTPLT SHORT SHORT	
13	136381	14" FLIP-UP FTPLT SHORT SHORT	
13	136382	15" FLIP-UP FTPLT SHORT SHORT	
13	136383	16" FLIP-UP FTPLT SHORT SHORT	
13	136384	17" FLIP-UP FTPLT SHORT SHORT	
13	136385	18" FLIP-UP FTPLT SHORT SHORT	
		MED EXTENSION / 2 HOLE CLAMP	
13	136386	10" FLIP-UP FTPLT MED SHORT	
13	136387	11" FLIP-UP FTPLT MED SHORT	
13	136388	12" FLIP-UP FTPLT MED SHORT	
13	136389	13" FLIP-UP FTPLT MED SHORT	
13	136390	14" FLIP-UP FTPLT MED SHORT	
13	136391	15" FLIP-UP FTPLT MED SHORT	
13	136392	16" FLIP-UP FTPLT MED SHORT	
13	136393	17" FLIP-UP FTPLT MED SHORT	
13	136394	18" FLIP-UP FTPLT MED SHORT	
		LONG EXTENSION / 2 HOLE CLAMP	
13	136395	10" FLIP-UP FTPLT LONG SHORT	
13	136396	11" FLIP-UP FTPLT LONG SHORT	
13	136397	12" FLIP-UP FTPLT LONG SHORT	
13	136398	13" FLIP-UP FTPLT LONG SHORT	
13	136399	14" FLIP-UP FTPLT LONG SHORT	
13	136400	15" FLIP-UP FTPLT LONG SHORT	
13	136401	16" FLIP-UP FTPLT LONG SHORT	
13	136402	17" FLIP-UP FTPLT LONG SHORT	
13	136403	18" FLIP-UP FTPLT LONG SHORT	
		HEMI EXTENSION / 3 HOLE CLAMP	
13	136404	10" FLIP-UP FTPLT HEMI LONG	
13	136405	11" FLIP-UP FTPLT HEMI LONG	
13	136406	12" FLIP-UP FTPLT HEMI LONG	
13	136407	13" FLIP-UP FTPLT HEMI LONG	
13	136408	14" FLIP-UP FTPLT HEMI LONG	

Pos.	Item Number	Description	Remarks
13	136409	15" FLIP-UP FTPLT HEMI LONG	
13	136410	16" FLIP-UP FTPLT HEMI LONG	
13	136411	17" FLIP-UP FTPLT HEMI LONG	
13	136412	18" FLIP-UP FTPLT HEMI LONG	
		SHORT EXTENSION / 3 HOLE CLAMP	
13	136413	10" FLIP-UP FTPLT SHORT LONG	
13	136414	11" FLIP-UP FTPLT SHORT LONG	
13	136415	12" FLIP-UP FTPLT SHORT LONG	
13	136416	13" FLIP-UP FTPLT SHORT LONG	
13	136417	14" FLIP-UP FTPLT SHORT LONG	
13	136418	15" FLIP-UP FTPLT SHORT LONG	
13	136419	16" FLIP-UP FTPLT SHORT LONG	
13	136420	17" FLIP-UP FTPLT SHORT LONG	
13	136421	18" FLIP-UP FTPLT SHORT LONG	
		MED EXTENSION / 3 HOLE CLAMP	
13	136422	10" FLIP-UP FTPLT MED LONG	
13	136423	11" FLIP-UP FTPLT MED LONG	
13	136424	12" FLIP-UP FTPLT MED LONG	
13	136425	13" FLIP-UP FTPLT MED LONG	
13	136426	14" FLIP-UP FTPLT MED LONG	
13	136427	15" FLIP-UP FTPLT MED LONG	
13	136428	16" FLIP-UP FTPLT MED LONG	
13	136429	17" FLIP-UP FTPLT MED LONG	
13	136430	18" FLIP-UP FTPLT MED LONG	
		LONG EXTENSION / 3 HOLE CLAMP	
13	136431	10" FLIP-UP FTPLT LONG LONG	
13	136432	11" FLIP-UP FTPLT LONG LONG	
13	136433	12" FLIP-UP FTPLT LONG LONG	
13	136434	13" FLIP-UP FTPLT LONG LONG	
13	136435	14" FLIP-UP FTPLT LONG LONG	
13	136436	15" FLIP-UP FTPLT LONG LONG	
13	136437	16" FLIP-UP FTPLT LONG LONG	
13	136438	17" FLIP-UP FTPLT LONG LONG	
13	136439	18" FLIP-UP FTPLT LONG LONG	
		Ship assembled part #	Use with multiple assemblies
	ASSY-HNG-FP	HANGER/FOOTPLATE ASSY REQUIRED	add with Hanger & Footplate kit

FLIP-UP FOOTREST DIRECT MOUNT

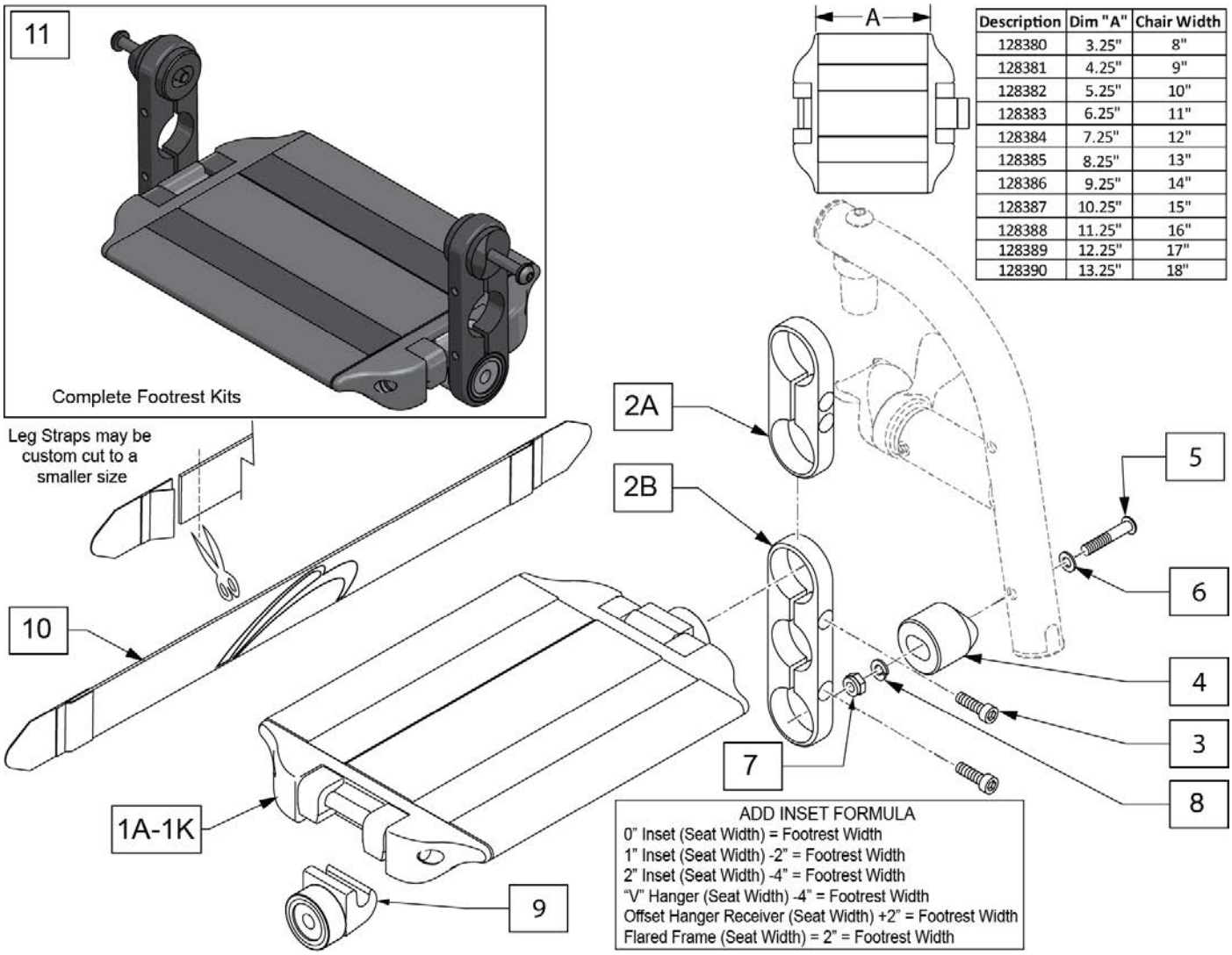

Description	Dim "A"	Chair Width
128380	3.25"	8"
128381	4.25"	9"
128382	5.25"	10"
128383	6.25"	11"
128384	7.25"	12"
128385	8.25"	13"
128386	9.25"	14"
128387	10.25"	15"
128388	11.25"	16"
128389	12.25"	17"
128390	13.25"	18"

Pos.	Item Number	Description	Remarks
1A	128380	8" ALUM CONT FTRST	
1B	128381	9" ALUM CONT FTREST	
1C	128382	10" ALUM CONT FTRST	
1D	128383	11" ALUM CONT FTRST	
1E	128384	12" ALUM CONT FTRST	
1F	128385	13" ALUM CONT FTRST	
1G	128386	14" ALUM CONT FTRST	
1H	128387	15" ALUM CONT FTRST	
1I	128388	16" ALUM CONT FTRST	
1J	128389	17" ALUM CONT FTRST	
1K	128390	18" ALUM CONT FTRST	
2A	128402	SHORT FOOTPLATE CLAMP	
2B	128403	LONG FOOTPLATE CLAMP	
3	102263-003	SHCS, M6X1X25, FULL, PL	
4	129058	HALF EXTEN TUBE ADAPTOR	
5	106964	BHCS 1/4-28 X 2	
6	107383	WASHER FLAT M6	
7	106935	NUT NYLOCK THIN 1/4-28	

Pos.	Item Number	Description	Remarks
8	107367	WASHER LOCK HI COLLAR 1/4	
9	128410	ALUM CONT FTRST CATCH	
10	113255	LEG STRAP 11"-12" BLK	
10	113256	LEG STRAP 13"-15" BLK	
10	113257	LEG STRAP 16"-18" BLK	
		2 HOLE CLAMP NO EXT	
11	136440	10" FLIP-UP FTPLT SHORT	
11	136441	11" FLIP-UP FTPLT SHORT	
11	136442	12" FLIP-UP FTPLT SHORT	
11	136443	13" FLIP-UP FTPLT SHORT	
11	136444	14" FLIP-UP FTPLT SHORT	
11	136445	15" FLIP-UP FTPLT SHORT	
11	136446	16" FLIP-UP FTPLT SHORT	
11	136447	17" FLIP-UP FTPLT SHORT	
11	136448	18" FLIP-UP FTPLT SHORT	
		3 HOLE CLAMP NO EXT	
11	136449	10" FLIP-UP FTPLT LONG	
11	136450	11" FLIP-UP FTPLT LONG	
11	136451	12" FLIP-UP FTPLT LONG	
11	136452	13" FLIP-UP FTPLT LONG	
11	136453	14" FLIP-UP FTPLT LONG	
11	136454	15" FLIP-UP FTPLT LONG	
11	136455	16" FLIP-UP FTPLT LONG	
11	136456	17" FLIP-UP FTPLT LONG	
11	136457	18" FLIP-UP FTPLT LONG	
		Ship assembled part #	Use with multiple assemblies
	ASSY-HNG-FP	HANGER/FOOTPLATE ASSY REQUIRED	add with Hanger & Footplate kit

MULTI-POSITION LATCH STUD SUPPORT

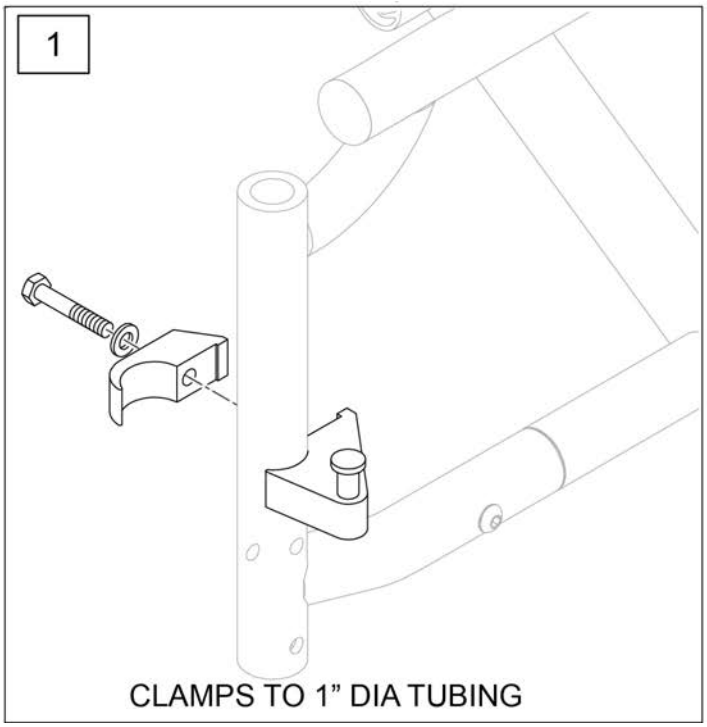

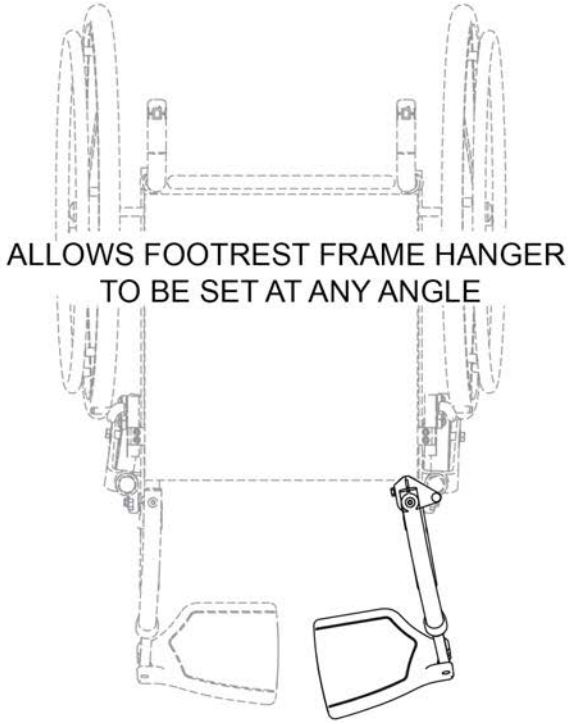

Pos.	Item Number	Description	Remarks
1	112807	LATCH STUD SUPPORT R MULTIPOS	Single
1	112808	LATCH STUD SUPPORT L MULTIPOS	Single
1	112809	LATCH STUD SUPPORT PR MULTIPOS	Pair

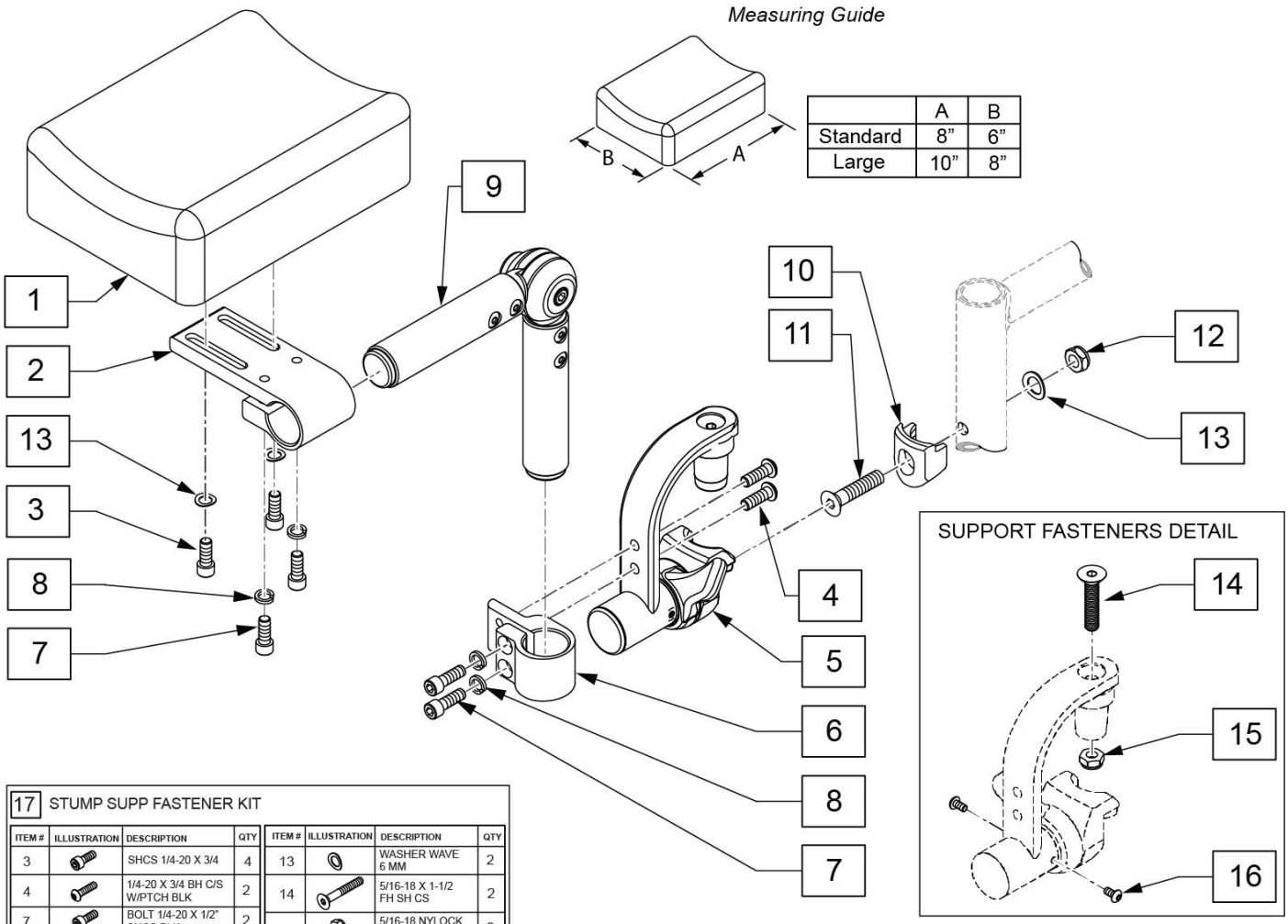

	A	B
Standard	8”	6”
Large	10”	8”

17 STUMP SUPP FASTENER KIT

ITEM #	ILLUSTRATION	DESCRIPTION	QTY
3		SHCS 1/4-20 X 3/4	4
4		1/4-20 X 3/4 BH C/S W/PTCH BLK	2
7		BOLT 1/4-20 X 1/2" SHCS BLK	2
8		WASHER LOCK HI COLLAR 1/4	4
13		WASHER WAVE 6 MM	2
14		5/16-18 X 1-1/2 FH SH CS	2
15		5/16-18 NYLOCK NUT THIN	2
16		BHCS, M4X.7X8, FULL, NP	2

Pos.	Item Number	Description	Remarks
1,3,13	161563	PAD W/FASTENERS STD	Single Pad, 6X8
1,3,13	161564	PAD W/FASTENERS LRG	Single Pad, 8X10
1-9,13	161565	STUMP SUPP RETRO LRG PAD RH	Single Pad, 8X10
1-9,13	161566	STUMP SUPP RETRO LRG PAD LH	Single Pad, 8X10
1-9,13	161567	STUMP SUPP RETRO STD PAD RH	6X8
1-9,13	161568	STUMP SUPP RETRO STD PAD LH	6X8
2-9,13	162051	STUMP SUPPORT W/O PAD RH	No Pad
2-9,13	162052	STUMP SUPPORT W/O PAD LH	No Pad
10-13	119514	LATCH RECEIVER KIT	for 1 side
17	161569	STUMP SUPP FASTENER KIT	for 1 side

SINGLE POST HEIGHT ADJUSTABLE ARMREST (MANUAL PRODUCTS)

Note: available on Quickie Iris chairs S/N prefix CGT and prior to IRS-007726 & IRSE-008701.

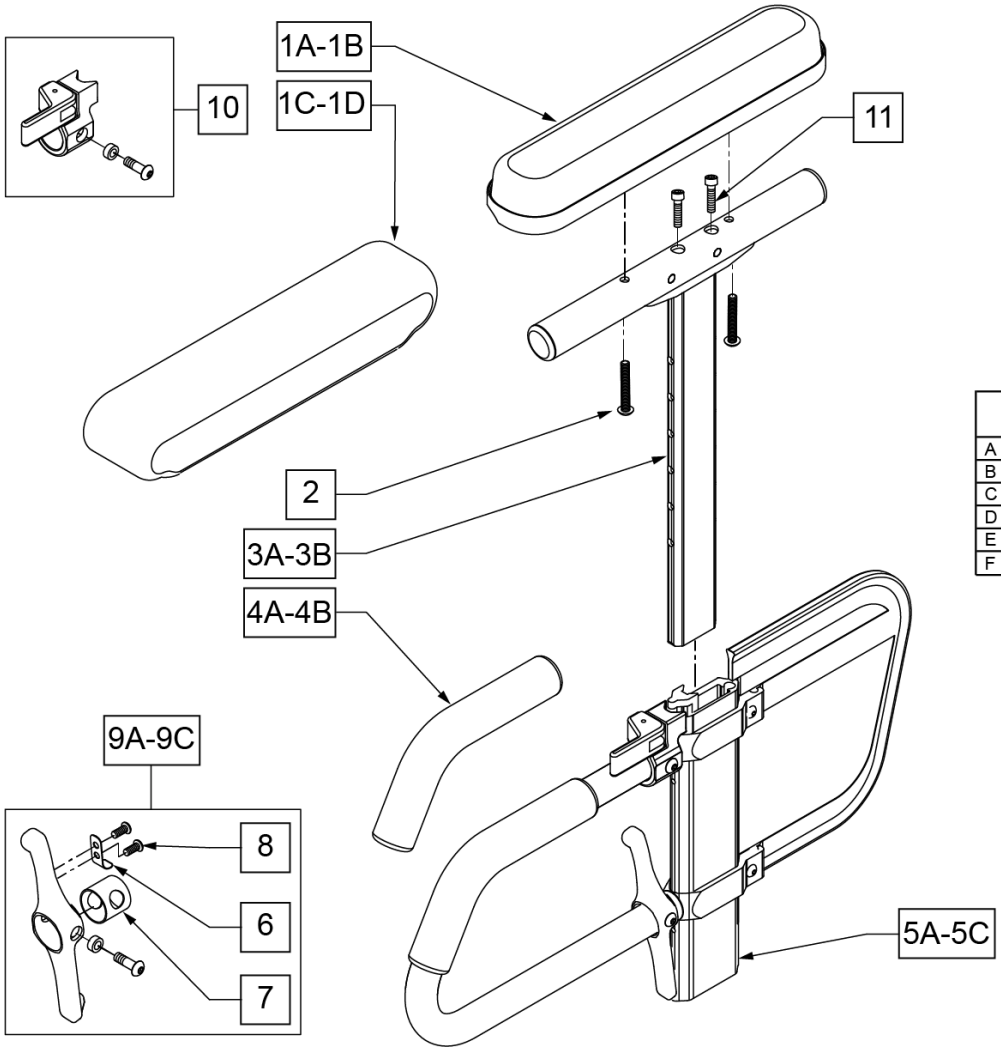

MEASURING GUIDE

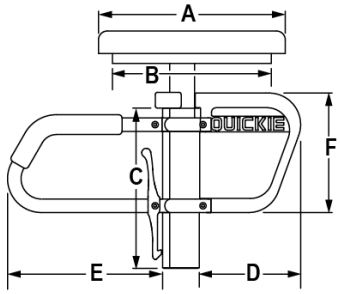

	ADULTS		KIDS		PED	
	STD	FULL	STD	FULL	STD	FULL
A	10"	14"	10"	14"	10"	14"
B	8 7/8"	12 3/8"	8 7/8"	12 3/8"	8 7/8"	12 3/8"
C	8 7/8"		8 7/8"		7 1/4"	
D	7 3/4"		6 1/4"		6 1/4"	
E	8 5/8"		6 3/4"		6 3/4"	
F	6 5/8"		5 1/8"		5 1/8"	

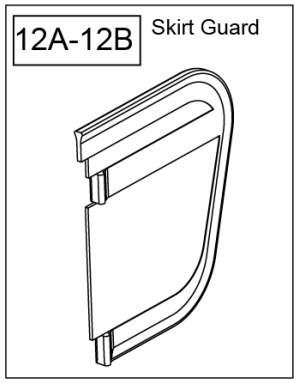

Pos.	Item Number	Description	Remarks
1A	561024	ARMREST PAD 10" DESK	DESK PAD
1B	561031	ARMREST PAD 14" FULL	FULL PAD
1C	561280	ARMREST PAD 10" L W/F	LEFT - DESK WATERFALL PAD
1C	561281	ARMREST PAD 10" R W/F	RIGHT - DESK WATERFALL PAD
1D	561284	ARMREST PAD 14" L W/F	LEFT - FULL WATERFALL PAD
1D	561285	ARMREST PAD 14" R W/F	RIGHT - FULL WATERFALL PAD
2	226038	10-32 x 1 3/8 BH C/S BLK	
4A	560610	5" x .705 x .125 FOAM TUBE	ADULT
4B	560627	7-1/2" x .705 x .125 FOAM TUBE	PEDS/KIDS
5A	882084	HT ADJ LOWER DC ARM ASSM STD R	RIGHT - STANDARD/ADULT
5A	882085	HT ADJ LOWER DC ARM ASSM STD L	LEFT - STANDARD/ADULT
5B	882082	HT ADJ LOWER DC ARM ASM KIDS R	RIGHT - KIDS
5B	882083	HT ADJ LOWER DC ARM ASM KIDS L	LEFT - KIDS
5C	882080	HT ADJ LOWER ARM ASSM PE D R	RIGHT - PEDIATRIC
5C	882081	HT ADJ LOWER ARM ASSM PE D L	LEFT - PEDIATRIC

Pos.	Item Number	Description	Remarks
6	321721	LEVER RETURN SPRING	
7	562825	RELEASE LEVER INNER SLEEVE	
8	281045	#6 x 1/4 PAN PHIL S/M/S	
9A	888000	HT ADJ REC REL LEVER ASSM STD	ADULT
9B	888001	HT ADJ REC REL LEVER ASSM KIDS	KIDS
9C	888002	HT ADJ REC REL LEVER ASSM PEDS	PEDS
10	888003	HT ADJ UPPER ARM REL ASSM R	RIGHT
10	888004	HT ADJ UPPER ARM REL ASSM L	LEFT
11	108534	SHCS 10-32 X 1-1/4 PL	Used with Classic Full only
12A	561140	HT ADJ SKIRT GUARD STD	Standard
12B	561141	HT ADJ SKIRT GUARD KDS	Kids
>>>>		ADULT UPPER ASSEMBLIES	
1A-3A	880192	HT ADJ UPPER ARM ASSM DESK R	RIGHT - ADULT DESK PAD
1A-3A	880198	HT ADJ UPPER ARM ASSM DESK L	LEFT - ADULT DESK PAD
1B-3A,11	880193	HT ADJ UPPER ARM ASSM FL R	RIGHT - ADULT FULL PAD
1B-3A,11	880199	HT ADJ UPPER ARM ASSM FL L	LEFT - ADULT FULL PAD
>>>>		ADULT UPPER ASSEMBLIES	
1C-3A	881230	HT ADJ UPPER L ARM ASSM DESK W/F	RIGHT - ADULT DESK WATER FALL PAD
1C-3A	881231	HT ADJ UPPER R ARM ASSM DESK W/F	LEFT - ADULT DESK WATER FALL PAD
1D-3A	881232	HT ADJ UPPER L ARM ASSM FL W/F	RIGHT - ADULT FULL WATER FALL PAD
1D-3A	881233	HT ADJ UPPER R ARM ASSM FL W/F	LEFT - ADULT FULL WATER FALL PAD
>>>>		PEDIATRIC AND KIDS UPPER ASSEMBLIES	
1A-3B	880174	HT ADJ UPPER ARM PED PWR DESK R	RIGHT - PED/KIDS DESK PAD
1A-3B	880175	HT ADJ UPPER ARM PED PWR DESK L	LEFT - PED/KIDS DESK PAD
1B-3B,11	880176	HT ADJ UPPER ARM PED PWR FULL R	RIGHT - PED/KIDS FULL PAD
1B-3B,11	880177	HT ADJ UPPER ARM PED PWR FULL L	LEFT - PED/KIDS FULL PAD
>>>>		PEDIATRIC AND KIDS UPPER ASSEMBLIES	
1C-3B	888341	HT ADJ PED UPPER R ARM ASSM D WF	RIGHT - PED/KIDS DESK WATER FALL PAD
1C-3B	888342	HT ADJ PED UPPER L ARM ASSM D WF	LEFT - PED/KIDS DESK WATER FALL PAD
1D-3B	888343	HT ADJ PED UPPER R ARM ASSM F WF	RIGHT - PED/KIDS FULL WATER FALL PAD
1D-3B	888344	HT ADJ PED UPPER L ARM ASSM F WF	LEFT - PED/KIDS FULL WATER FALL PAD
>>>>		COMPLETE ADULT ARMREST ASSEMBLY	
1A-3A-5A	880210	HT ADJ STD R W/DESK ARM PAD	RIGHT - ADULT - DESK PAD
1A-3A-5A	880211	HT ADJ STD L W/DESK ARM PAD	LEFT - ADULT - DESK PAD
1B-3A-5A,11	880212	HT ADJ STD R W/FULL ARM PAD	RIGHT - ADULT - FULL PAD
1B-3A-5A,11	880213	HT ADJ STD L W/FULL ARM PAD	LEFT - ADULT - FULL PAD
1C-3A-5A	881301	HT ADJ STD R W/DESK W/F PAD	RIGHT - ADULT - WATERFALL DESK PAD
1C-3A-5A	881300	HT ADJ STD L W/DESK W/F PAD	LEFT - ADULT - WATERFALL DESK PAD
1D-3A-5A	881305	HT ADJ STD R W/FULL W/F PAD	RIGHT - ADULT - WATERFALL FULL PAD
1D-3A-5A	881304	HT ADJ STD L W/FULL W/F PAD	LEFT - ADULT - WATERFALL FULL PAD
>>>>		COMPLETE KIDS ARMREST ASSEMBLY	
1A-3B-5B	880214	HT ADJ KIDS R W/DESK ARM PAD	RIGHT - KIDS - DESK PAD
1A-3B-5B	880215	HT ADJ KIDS L W/DESK ARM PAD	LEFT - KIDS - DESK PAD
1B-3B-5B,11	880216	HT ADJ KIDS R W/FULL ARM PAD	RIGHT - KIDS - FULL PAD
1B-3B-5B,11	880217	HT ADJ KIDS L W/FULL ARM PAD	LEFT - KIDS - FULL PAD
1C-3B-5B	881303	HT ADJ KIDS R W/DESK W/F PAD	RIGHT - KIDS - WATERFALL DESK PAD
1C-3B-5B	881302	HT ADJ KIDS L W/DESK W/F PAD	LEFT - KIDS - WATERFALL DESK PAD
1D-3B-5B	881307	HT ADJ KIDS R W/FULL W/F PAD	RIGHT - KIDS - WATERFALL FULL PAD
1D-3B-5B	881306	HT ADJ KIDS L W/FULL W/F PAD	LEFT - KIDS - WATERFALL FULL PAD
>>>>		COMPLETE PEDIATRIC ARMREST ASSEMBLY	
1A-3B-5C	880226	HT ADJ PED R W/DESK ARM PAD	RIGHT - PEDS - DESK PAD
1A-3B-5C	880227	HT ADJ PED L W/DESK ARM PAD	LEFT - PEDS - DESK PAD
1B-3B-5C,11	880228	HT ADJ PED R W/FULL ARM PAD	RIGHT - PEDS - FULL PAD
1B-3B-5C,11	880229	HT ADJ PED L W/FULL ARM PAD	LEFT - PEDS - FULL PAD
1C-3B-5C	888345	HT ADJ PED R W/DESK W/F PAD	RIGHT - PEDS - WATERFALL DESK PAD
1C-3B-5C	888346	HT ADJ PED L W/DESK W/F PAD	LEFT - PEDS - WATERFALL DESK PAD

Pos.	Item Number	Description	Remarks
1D-3B-5C	888347	HT ADJ PED R W/FULL W/F PAD	RIGHT - PEDS - WATERFALL FULL PAD
1D-3B-5C	888348	HT ADJ PED L W/FULL W/F PAD	LEFT - PEDS - WATERFALL FULL PAD

SINGLE POST HEIGHT ADJUSTABLE ARMREST

[05/19/2020]

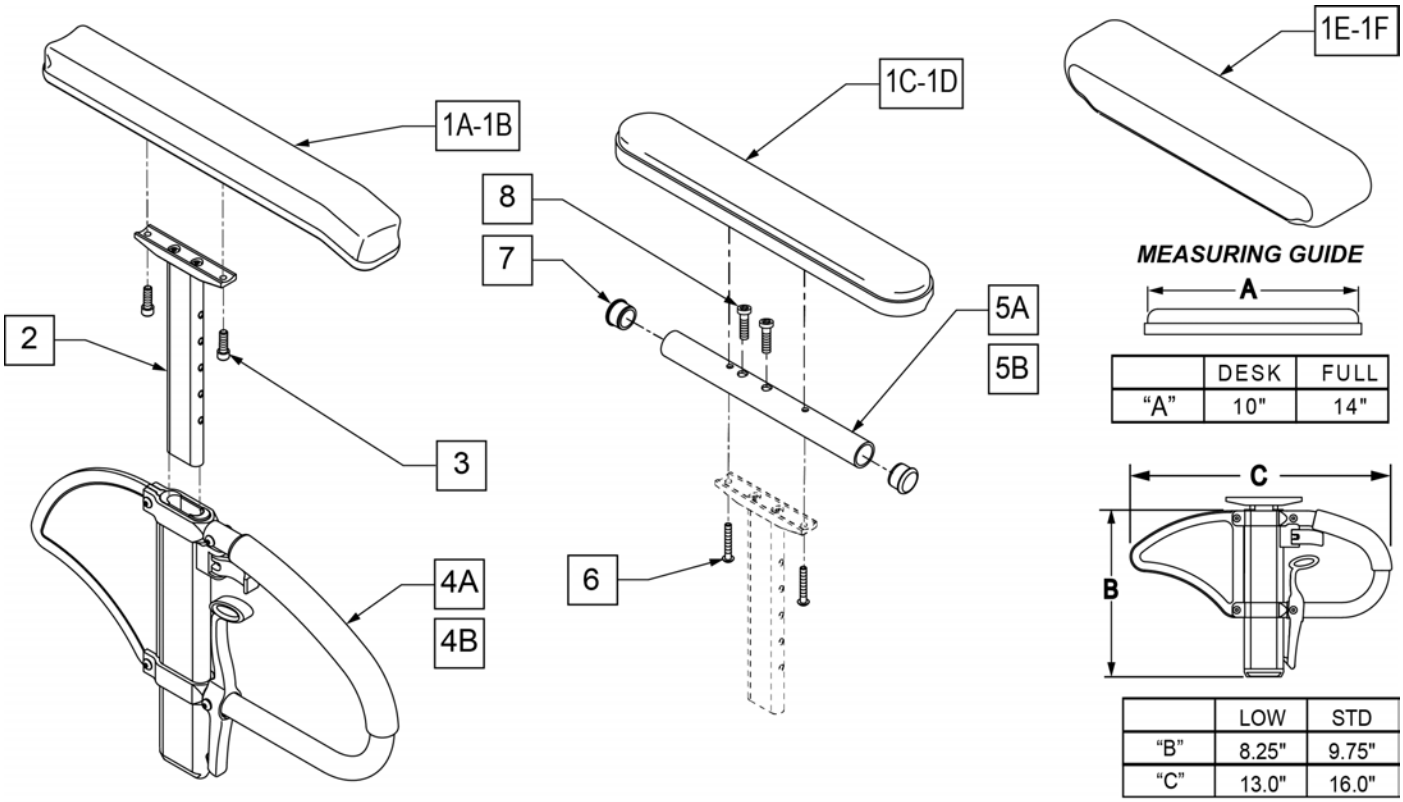

Pos.	Item Number	Description	Remarks
1A	104568-001	SPHA PAD DESK	CONTOUR DESK
1B	104568-002	SPHA PAD FULL	CONTOUR FULL
1C	561024	ARMREST PAD 10" DESK	CLASSIC DESK
1D	561031	ARMREST PAD 14" FULL	CLASSIC FULL
1E	561280	ARMREST PAD 10" LEFT W/F	Left-Waterfall Desk
1E	561281	ARMREST PAD 10" RIGHT W/F	Rightt-Waterfall Desk
1F	561284	ARMREST PAD 14" LEFT W/F	Leftt-Waterfall Full
1F	561285	ARMREST PAD 14" RIGHT W/F	Rightt-Waterfall Full
2	116312	SNGL POST UPPR ASSM LOW	LOW/SMALL
2	116313	SNGL POST UPPR ASSM STD	STANDARD
3	106956	SHCS 10-32 X 3/4 ROHS	
2,4A	104509-001	SPHA ARMREST ASSY STD	STANDARD
2,4B	104509-002	SPHA ARMREST ASSY LOW	LOW/SMALL
5A	521812	HT ADJ PD TUBE 10IN DESK POWE	Desk
5B	521813	HT ADJ PD TUBE 14IN FULL POWE	Full
6	107024	BHCS 10-32 X 1 1/2 ROHS	
7	560735	7/8" ROUND TUBE PLUG	
8	108534	SHCS 10-32 X 1-1/4 PL	Used with Full Length & Waterfall
1C,2,3,4A,5A,6,7	108599	SPHA STD CLASIC DESK PAD R	Right
1C,2,3,4A,5A,6,7	108603	SPHA STD CLASIC DESK PAD L	Left
1D,2,3,4A,5B,6-8	108601	SPHA STD CLASIC FULL PAD R	Right
1D,2,3,4A,5B,6-8	108605	SPHA STD CLASIC FULL PAD L	Left
1A,2,3,4A	108595	SPHA STD CNTUR DESK PAD	
1B,2,3,4A	108597	SPHA STD CNTUR FULL PAD	
1C,2,3,4B,5A,6,7	108600	SPHA LOW CLASIC DESK PAD R	Right
1C,2,3,4B,5A,6,7	108604	SPHA LOW CLASIC DESK PAD L	Left

Pos.	Item Number	Description	Remarks
1D,2,3,4B,5B,6-8	108602	SPHA LOW CLASIC FULL PAD R	Right
1D,2,3,4B,5B,6-8	108606	SPHA LOW CLASIC FULL PAD L	Left
1A,2,3,4B	108596	SPHA LOW CNTUR DESK PAD	
1B,2,3,4B	108598	SPHA LOW CNTUR FULL PAD	
1C,2,5A,6,7	159600	SPHA STD CLAS DESK UPPR R	Right
1C,2,5A,6,7	159601	SPHA STD CLAS DESK UPPR L	Left
1D,2,5B,6-8	159602	SPHA STD CLAS FULL UPPR R	Right
1D,2,5B,6-8	159603	SPHA STD CLAS FULL UPPR L	Left
1C,2,5A,6,7	159604	SPHA LOW CLAS DESK UPPR R	Right
1C,2,5A,6,7	159605	SPHA LOW CLAS DESK UPPR L	Left
1D,2,5B,6-8	159606	SPHA LOW CLAS FULL UPPR R	Right
1D,2,5B,6-8	159607	SPHA LOW CLAS FULL UPPR L	Left
1E,2,4B,5A,6,7	164089	SPHA LOW W/F DESK PAD R	Right
1E,2,4B,5A,6,8	164090	SPHA LOW W/F DESK PAD L	Left
1F,2,4B,5B,6,8	164091	SPHA LOW W/F FULL PAD R	Right
1F,2,4B,5B,6,8	164092	SPHA LOW W/F FULL PAD L	Left
1E,2,4A,5A,6,7	164093	SPHA STD W/F DESK PAD R	Right
1E,2,4A,5A,6,8	164094	SPHA STD W/F DESK PAD L	Left
1F,2,4A,5B,6,8	164095	SPHA STD W/F FULL PAD R	Right
1F,2,4A,5B,6,8	164096	SPHA STD W/F FULL PAD L	Left

Note: Fits most Manual Products, not all Armrest Pads are offered on all chairs, consult product order form for compatibility.

Note: available on Quickie Iris after S/N IRS-007726 & IRSE-008701 and prior to IRS-063000 & IRSE-083000, and Zippie Iris prior to ZRS-051000 & ZRSE-058000.

Note: if switching from Desk to Full Length Armrest Pad OR switching from Full Length to Desk Armrest Pad, the following items are required: 1C/1D, 5A/5B, and 6-8.

SINGLE POST HEIGHT ADJ ARMREST

[03/14/2022]

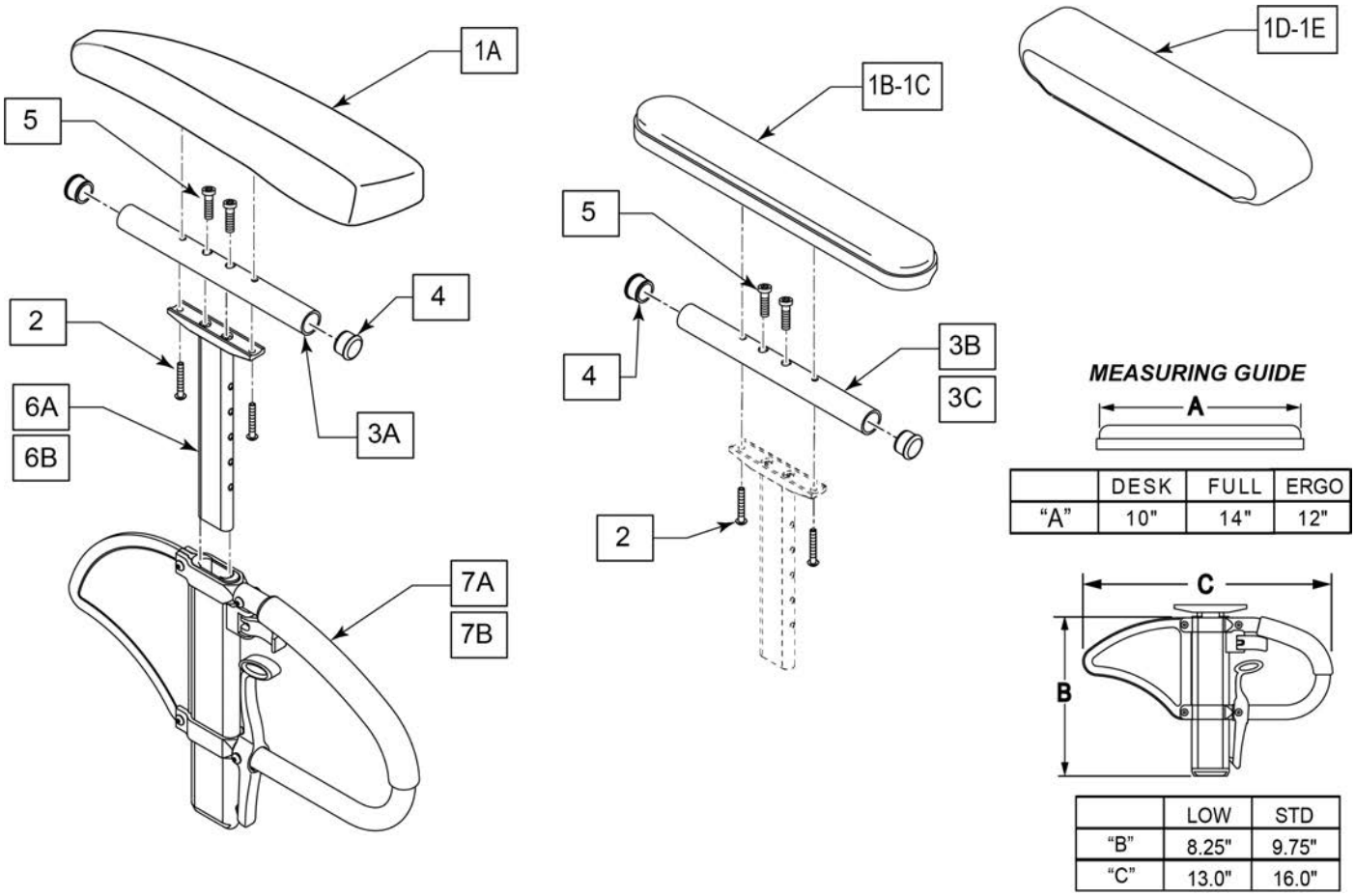

	DESK	FULL	ERGO
"A"	10"	14"	12"

	LOW	STD
"B"	8.25"	9.75"
"C"	13.0"	16.0"

Pos.	Item Number	Description	Remarks
1A,2	161631	ERGO PAD RIGHT	With Fasteners
1A,2	161632	ERGO PAD LEFT	With Fasteners
1B	161634	CLASSIC PAD FULL	With Fasteners
1C	161633	CLASSIC PAD DESK	With Fasteners
1D	561280	ARMREST PAD 10" LEFT W/F	
1D	561281	ARMREST PAD 10" RIGHT W/F	
1E	561284	ARMREST PAD 14" LEFT W/F	
1E	561285	ARMREST PAD 14" RIGHT W/F	
2	107024	BHCS 10-32 X 1-1/2 ROHS	
3B	521812	HT ADJ PD TUBE 10IN DESK POWE	Desk
3C	521813	HT ADJ PD TUBE 14IN FULL POWE	Full
4	560735	7/8" ROUND TUBE PLUG	
5	108534	SHCS 10-32 X 1-1/4 PL	Used with Full Length & Waterfall
6A	116313	SNGL POST UPPR ASSM STD	STANDARD
6B	116312	SNGL POST UPPR ASSM LOW	LOW/SMALL
6A,7A	104509-001	SPHA ARMREST ASSY STD	STANDARD
6B,7B	104509-002	SPHA ARMREST ASSY LOW	LOW/SMALL
		COMPLETE ARMREST W/O RECEIVERS	
1A,2,3A,4,5,6B,7B	161561	SPHA LOW ERGO PAD FULL RH	Right
1A,2,3A,4,5,6B,7B	161562	SPHA LOW ERGO PAD FULL LH	Left
1B,2,3B,4,5,6B,7B	161553	SPHA LOW CLASSIC PAD FULL RH	Right
1B,2,3B,4,5,6B,7B	161554	SPHA LOW CLASSIC PAD FULL LH	Left
1B,2,3B,4,5,6A,7A	161555	SPHA STD CLASSIC PAD FULL RH	Right

Pos.	Item Number	Description	Remarks
1B,2,3B,4,5,6A,7A	161556	SPHA STD CLASSIC PAD FULL LH	Left
1C,2,3C,4,5,6B,7B	161557	SPHA LOW CLASSIC PAD DESK RH	Right
1C,2,3C,4,5,6B,7B	161558	SPHA LOW CLASSIC PAD DESK LH	Left
1C,2,3C,4,5,6A,7A	161559	SPHA STD CLASSIC PAD DESK RH	Right
1C,2,3C,4,5,6A,7A	161560	SPHA STD CLASSIC PAD DESK LH	Left
1D,2,3B,4,6B,7B	164089	SPHA LOW W/F DESK PAD R	Right
1D,2,3B,4,6B,7B	164090	SPHA LOW W/F DESK PAD L	Left
1E,2,3C,4,6B,7B	164091	SPHA LOW W/F FULL PAD R	Right
1E,2,3C,4,6B,7B	164092	SPHA LOW W/F FULL PAD L	Left
1D,2,3B,4,6A,7A	164093	SPHA STD W/F DESK PAD R	Right
1D,2,3B,4,6A,7A	164094	SPHA STD W/F DESK PAD L	Left
1E,2,3C,4,6A,7A	164095	SPHA STD W/F FULL PAD R	Right
1E,2,3C,4,6A,7A	164096	SPHA STD W/F FULL PAD L	Left

Note: Available on chairs after S/N IRS-063000 & IRSE-083000, and ZRS-051000 & ZRSE-058000.

Note: if switching from Desk to Full Length Armrest Pad OR switching from Full Length to Desk Armrest Pad, the following items are required: 1B/1C, 2, 3B/3C, 4 and 5.

DUAL POST ARMREST & RECEIVER

[03/2011]

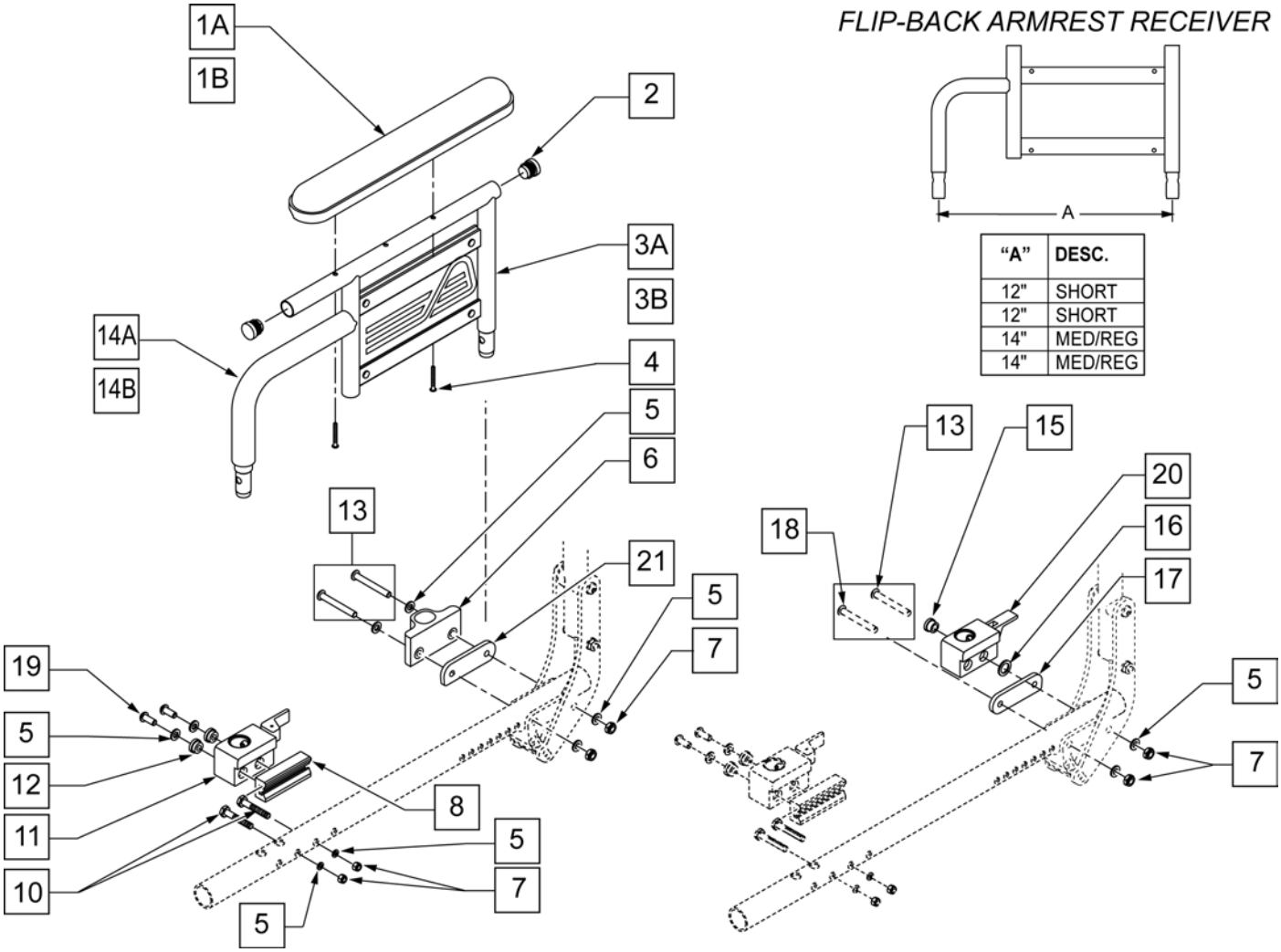

"A"	DESC.
12"	SHORT
12"	SHORT
14"	MED/REG
14"	MED/REG

Pos.	Item Number	Description	Remarks
1A	561024	ARMREST PAD 10" DESK	
1B	561031	ARMREST PAD 14" FULL	
2	560735	7/8" ROUND TUBE PLUG	
4	107023	BHCS 10-32 x 1 3/8 ROHS	
5	106943	WASHER FLAT AN 1/4 ROHS	
6	552190	RECEIVER ARMREST DUAL POST REAR FIXED	
7	106935	NUT NYLOCK THIN 1/4 -28 ROHS	
8	506137	ADAPTER FR UNI RECEIVER 1.0 OFFSET	
10	106972	HHCS 1/4 -28 x 1 1/2 ROHS	
11	506366	UNIVERSAL ARMREST RECEIVER ASSM RH	RIGHT-FRONT
11	506367	UNIVERSAL ARMREST RECEIVER ASSM LH	LEFT -FRONT
12	340143	BUSHING .257 ID x .25 LG SST	
13	106967	BHCS 1/4 -28 x 2 1/2 SHLDR ROHS	
14A	560514	FOAM 8" x .840 TUBE	MEDIUM
14B	560515	FOAM 6" x .840 TUBE	SHORT
15	340144	BUSHING STEEL .257 ID x .346 LG SST	
16	561273	1/2 x 3/4 x .060 NYLON WASHER	
17	506140	BACKREST PIVOT ARMREST RECEIVER	
18	106966	BHCS 1/4 -28 x 2 1/4 SHLDR ROHS	

Pos.	Item Number	Description	Remarks
19	226313	BHCS 1/4 -28 x 5/8 SHLDR ROHS	
20	506368	UNIVERSAL ARMREST RECEIVER ASSM RV	RIGHT-REAR
20	506369	UNIVERSAL ARMREST RECEIVER ASSM LV	LEFT -REAR
21	506140	ADAPTER PVT DP UNIV ARMREST IRIS	FITS CHAIRS W/ SN# Prefix CGT Only.
5,7,8,10-12,19	506408	UNIVERSAL DP ARM REC ASSM RFH QTS/IR	RIGHT
5,7,8,10-12,19	506409	UNIVERSAL DP ARM REC ASSM LFH QTS/IR	LEFT
5,7,8,10-12,19,21	920598	DP/DP HEIGHT ADJ ARM RECEIVER KIT	FITS CHAIRS W/ SN# Prefix CGT Only. Left & Rt
1A,2,3A,4	881616	DUAL POST ARM W/ DESK QTS SHORT R	DESK R SHORT
1A,2,3A,4	881617	DUAL POST ARM W/ DESK QTS SHORT L	DESK L SHORT
1B,2,3A,4	881618	DUAL POST ARM W/ FULL QTS SHORT R	FULL R SHORT
1B,2,3A,4	881619	DUAL POST ARM W/ FULL QTS SHORT L	FULL L SHORT
1A,2,3B,4	881580	DUAL POST ARM SHORT W/ DESK R PWR	DESK R MED
1A,2,3B,4	881581	DUAL POST ARM SHORT W/ DESK L PWR	DESK L MED
1B,2,3B,4	881582	DUAL POST ARM SHORT W/ FULL R PWR	FULL R MED
1B,2,3B,4	881583	DUAL POST ARM SHORT W/ FULL L PWR	FULL L MED
5,7,15-17,20	506410	UNIV DP ARMREST RECEIVER ASSM RRV IRIS	RIGHT-REAR
5,7,15-17,20	506411	UNIV DP ARMREST RECEIVER ASSM LRV IRIS	LEFT -REAR
5,7,8,10-12,15-17,20	920599	DP FB/DPST FB HA ARM RECEIVER KIT	FLIP BACK ARM REC. KIT (Includes Frt & Rear Rec's)

DUAL POST HGT ADJ ARMREST & RECEIVER

[07/19/2019]

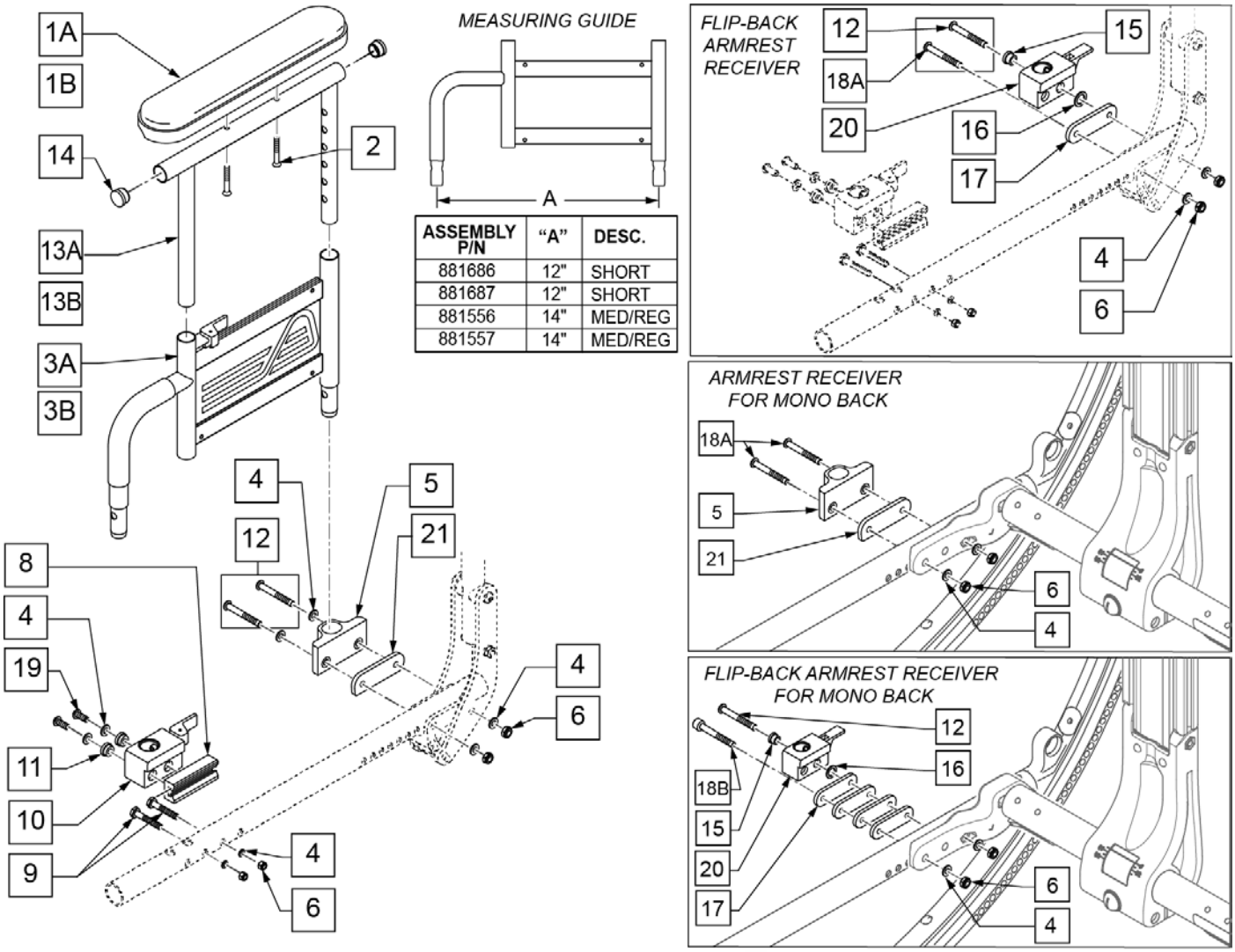

ASSEMBLY P/N	"A"	DESC.
881686	12"	SHORT
881687	12"	SHORT
881556	14"	MED/REG
881557	14"	MED/REG

Pos.	Item Number	Description	Remarks
1A	561024	ARMREST PAD 10" DESK	
1B	561031	ARMREST PAD 14" FULL	
2	107023	BHCS 10-32 x 1 3/8 ROHS	
3A	881686	DUAL POST ADJ LOWER ARM R	Short Right
3A	881687	DUAL POST ADJ LOWER ARM L	Short Left
3B	881556	ARM ASSM LOWER HT ADJ REGULAR R	Reg/Med Right
3B	881557	ARM ASSM LOWER HT ADJ REGULAR L	Reg/Med Left
4	106943	WASHER FLAT AN 1/4 ROHS	
5	552190	RECEIVER ARMREST DUAL POST REAR FIXED	
6	106935	NUT NYLOCK THIN 1/4 -28 ROHS	
8	506137	ADAPTER FR UNI RECEIVER 1.0 OFFSET	
9	106972	HHCS 1/4 -28 x 1 1/2 ROHS	
10	506366	UNIVERSAL ARMREST RECEIVER ASSM RH	Right Front
10	506367	UNIVERSAL ARMREST RECEIVER ASSM LH	Left Front
11	340143	BUSHING .257 ID x .25 LG SST	
12	106967	BHCS 1/4 -28 x 2 1/2 SHLDR ROHS	
13A	521841	DUAL POST ADJ UPPER ARM DESK	
13B	521843	DUAL POST ADJ UPPER ARM FULL	

Pos.	Item Number	Description	Remarks
14	560735	7/8" ROUND TUBE PLUG	
15	340144	BUSHING STEEL .257 ID x .346 LG SST	
16	561273	1/2 x 3/4 x .060 NYLON WASHER	
17	506140	BACKREST PIVOT ARMREST RECEIVER	
18A	106966	BHCS 1/4 -28 x 2 1/4 SHOULDER ROHS	
18B	129797	SHCS 1/4-28 X 2 3/4 FULL NP	
19	226313	BHCS 1/4 -28 x 5/8 PL ROHS	
20	506368	UNIVERSAL ARMREST RECEIVER ASSM RV	Right Rear
20	506369	UNIVERSAL ARMREST RECEIVER ASSM LV	Left Rear
21	506140	ADAPTER PVT DP UNIV ARMREST IRIS	Fits chairs w/ SN Prefix CGT Only
4,6,8-11,19	506408	UNIVERSAL DP ARM REC ASSM RFH QTS/IR	Right Front
4,6,8-11,19	506409	UNIVERSAL DP ARM REC ASSM LFH QTS/IR	Left Front
4,6,8-11,19	920598	DP/DP HEIGHT ADJ ARM RECEIVER KIT	Fits chairs w/ SN Prefix CGT Only
1A,2,14,13A	881446	DUAL POST UHA ARMREST RH INC DESK	Desk Right
1A,2,14,13A	881447	DUAL POST UHA ARMREST LH INC DESK	Desk Left
1B,2,14,13B	881448	DUAL POST UHA ARMREST RH INC FULL	Full Right
1B,2,14,13B	881449	DUAL POST UHA ARMREST LH INC FULL	Full Left
4,6,15,16,17,20	506410	UNIV DP ARMREST RECEIVER ASSM RRV IRIS	Right Rear
4,6,15,16,17,20	506411	UNIV DP ARMREST RECEIVER ASSM LRV IRIS	Left Rear
4,6,8-12,15-20	920599	DP FB/DPST FB HA ARM RECEIVER KIT	Flip Back Arm Rec Kit (includes Front & Rear Rec's)
1A,2,3A,13A,14	881682	DUAL POST ADJ ARM W/DESK QTS R	Right Desk Length Pad; Short Arm Length
1A,2,3A,13A,14	881683	DUAL POST ADJ ARM W/DESK QTS L	Left Desk Length Pad; Short Arm Length
1B,2,3A,13B,14	881684	DUAL POST ADJ ARM W/FULL QTS R	Right Full Length Pad; Short Arm Length
1B,2,3A,13B,14	881685	DUAL POST ADJ ARM W/FULL QTS L	Left Full Length Pad; Short Arm Length
1A,2,3B,13A,14	881560	DUAL POST ADJ ARM SHT W/DESK R	Right Desk Length Pad; Reg/Med Arm Length
1A,2,3B,13A,14	881561	DUAL POST ADJ ARM SHT W/DESK L	Left Desk Length Pad; Reg/Med Arm Length
1B,2,3B,13B,14	881566	DUAL POST ADJ ARM SHT W/FULL R	Right Full Length Pad; Reg/Med Arm Length
1B,2,3B,13B,14	881567	DUAL POST ADJ ARM SHT W/FULL L	Left Full Length Pad; Reg/Med Arm Length

CANTILEVER ARMREST- MONO BACK

[01/2018]

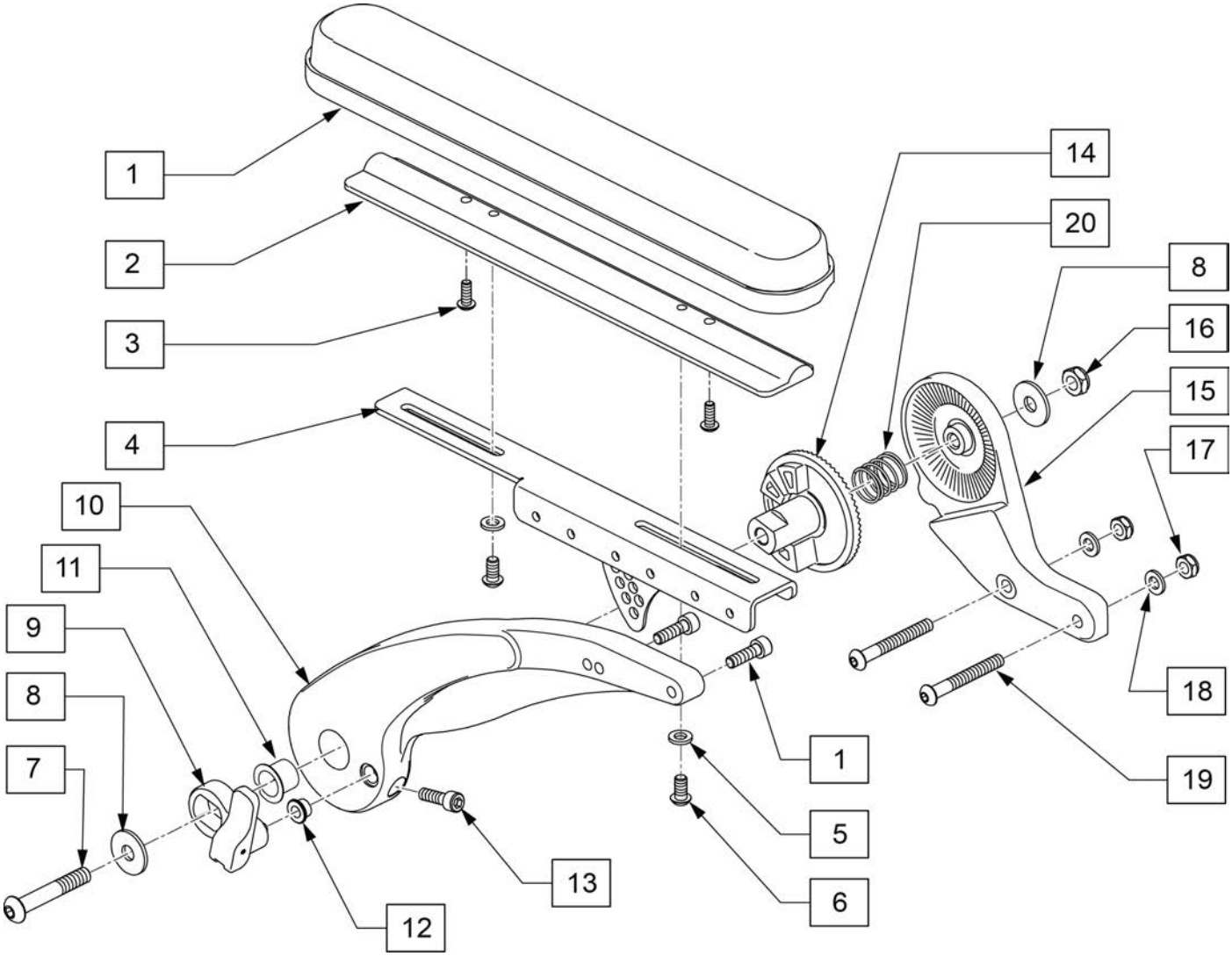

Pos.	Item Number	Description	Remarks
1-3,5,6	135189	CANTI ARMPAD KIT FULL	
3	226043	10-32 X 1/2 BH C/S BLK	
5	250104	WASHER FLAT M6	
6	230113	BHCS M6 X 1 X 12	
7	013152	BHCS M8 X 55	
8	015056	WASHER M10 X 35 X 1.5 BLK	
9	135190	FLIP UP ASSM	
11	104469	MARCINAL LUB BRNG SF-1 2020	
12	481339	BACK REL BUSHING RIGID BLK ZN	
13	013156	SHCS M6 X 1 X 20 BLK W/PL	
16	013036	M8 X 1.25 JAM NUT HEX	
17	106935	NUT NYLOCK THIN 1/4-28	
18	106943	WASHER FLAT AN 1/4	
19	106965	BHCS 1/4-28 X 2 SHLDR	
1-20	129375	CANTILEVER ARMREST ASSM RT	Right
1-20	129376	CANTILEVER ARMREST ASSM LH	Left
1,4,10-13	129115	CANTILEVER ARMREST W/LOCK RH	Right
1,4,10-13	129116	CANTILEVER ARMREST W/LOCK LH	Left

[01/2018]

Note: Cantilever Armrest is only compatible with chairs equipped with Mono Backrest.

LENGTH ADJUSTABLE LOCKING FLIP-UP ARMREST (USE ON DAB FRAMES ONLY) (08/23/2019)

NOTE: FOR ARMRESTS PRIOR TO 7/22/96 USE RETRO FIT KIT TO REPLACE ADJUSTABLE FLIP-UP ARM CLAMP.

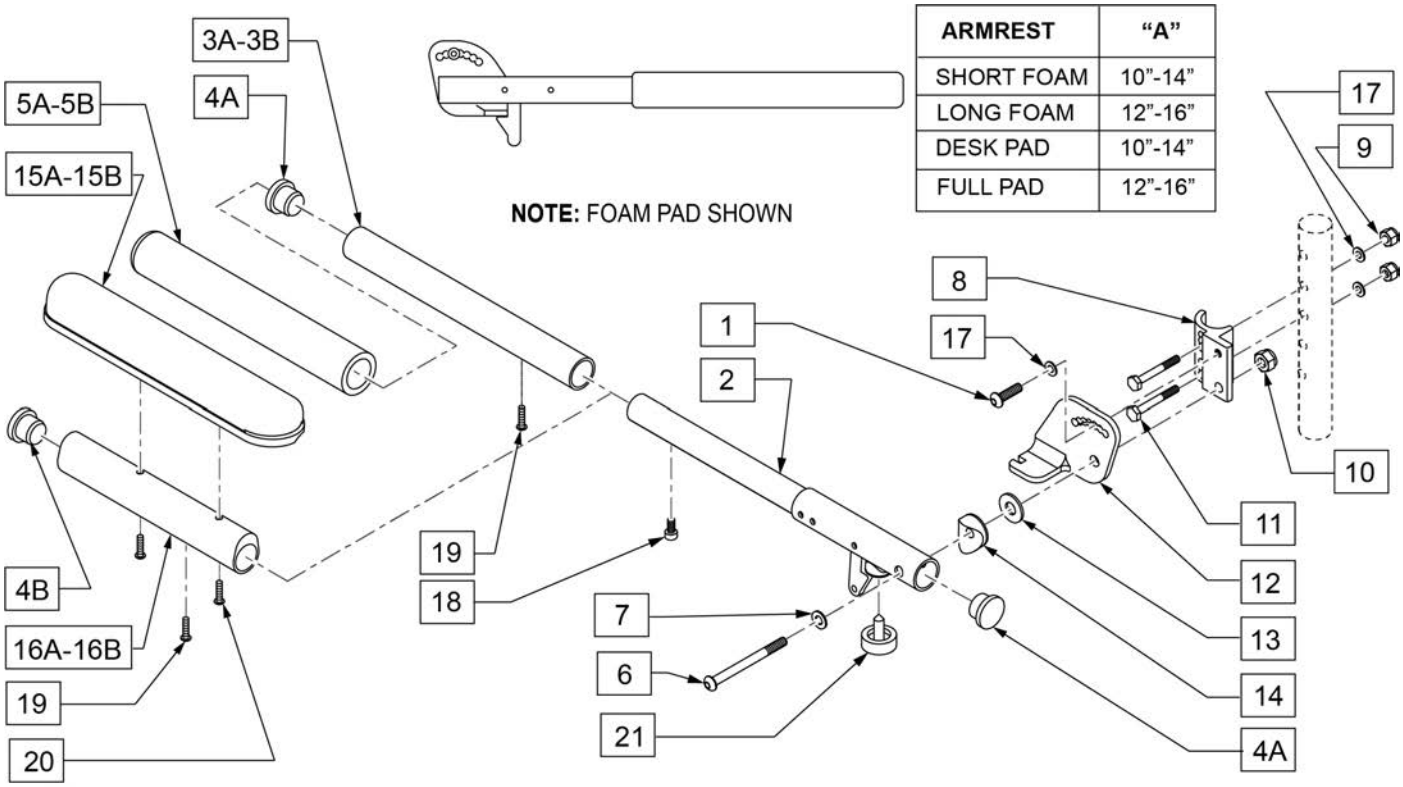

ARMREST	"A"
SHORT FOAM	10"-14"
LONG FOAM	12"-16"
DESK PAD	10"-14"
FULL PAD	12"-16"

Pos.	Item Number	Description	Remarks
1	107025	BHCS 1/4-28 x 1/2 ROHS	
4A	561002	1" INSERT PLUG .083	
4B	561062	1" INSERT PLUG .065	
5A	560299	7 x .940 x .20 FOAM GRIP	SHORT PAD
5B	560640	9" X .93" X .155" FOAM GRIP	LONG PAD
6	106983	BHCS 5/16-18 x 2 SHLDR ROHS	
7	106947	WASHER FLAT THIN AN 5/16 ROHS	
8	550168	ADJUSTABLE LOCK FLIP-UP ARM MOUNT	RIGHT
8	550169	ADJUSTABLE LOCK FLIP-UP ARM MOUNT	LEFT
9	106935	NYLOCK NUT THIN 1/4 -28 ROHS	
10	202117	5/16-18 NYLOCK NUT THICK BLK	
11	106972	HHCS 1/4-28 x 1 1/2 ROHS	
12	550474	ADJUSTABLE FLIP-BACK ARM BRACKET	RIGHT
12	550475	ADJUSTABLE FLIP-BACK ARM BRACKET	LEFT
13	561016	1" WASHER 5/16" HOLE	
14	561006	1" SADDLE 5/16" HOLE	
15A	561024	ARMREST PAD 10" DESK	
15B	561031	ARMREST PAD 14" FULL	
17	106943	WASHER FLAT AN 1/4 ROHS	
18	107036	SHCS 8 -32 x 3/8 ROHS	
19	225110	10-32 X 1/2" SET SCREW	
20	107022	BHCS 10-32 X 5/8 ROHS	
21	560252	1" COVED STEM BUMPER	

Pos.	Item Number	Description	Remarks
3B, 4A, 5B, 19	882074	FOAM PAD LONG ADJUSTABLE LENGTH	LONG PAD ASSM ONLY
3A, 4A, 5A, 19	882075	FOAM PAD LONG ADJUSTABLE LENGTH	SHORT PAD ASSM ONLY
4B,15B,16B,19,20	882070	FULL PAD ADJUSTABLE LENGTH ASSM	RIGHT FULL PAD ASSM ONLY
4B,15B,16B,19,20	882071	FULL PAD ADJUSTABLE LENGTH ASSM	LEFT FULL PAD ASSM ONLY
4B,15A,16A,19,20	882072	DESK PAD ADJUSTABLE LENGTH ASSM	RIGHT DESK PAD ASSM ONLY
4B,15A,16A,19,20	882073	DESK PAD ADJUSTABLE LENGTH ASSM	LEFT DESK PAD ASSM ONLY
1,2,6-14,17,21	882088	ADJ LENGTH LOCKING FLIP-UP ASSM R	RIGHT ARM ASSM W/O PAD
1,2,6-14,17,21	882089	ADJ LENGTH LOCKING FLIP-UP ASSM R	LEFT ARM ASSM W/O PAD
1,2,3B,4A,5B,6-14,17,19 -21	900454	ADJ LENGTH LOCKING FLIP-UP FOAM LONG	PAIR - LONG FOAM ARM ASSM
1,2,3B,4A,5B,6-14,17,19 -21	881294	ADJ LENGTH LOCKING FLIP-UP FOAM LONG	RIGHT - LONG FOAM ARM ASSM
1,2,3B,4A,5B,6-14,17,19 -21	881295	ADJ LENGTH LOCKING FLIP-UP FOAM LONG	LEFT - LONG FOAM ARM ASSM
1,2,3A,4A,5A,6-14,17,19 -21	900455	ADJ LENGTH LOCKING FLIP-UP FOAM SHORT	PAIR - SHORT FOAM ARM ASSM
1,2,3A,4A,5A,6-14,17,19 -21	881296	ADJ LENGTH LOCKING FLIP-UP FOAM SHORT	RIGHT - SHORT FOAM ARM ASSM
1,2,3A,4A,5A,6-14,17,19 -21	881297	ADJ LENGTH LOCKING FLIP-UP FOAM SHORT	LEFT - SHORT FOAM ARM ASSM
1,2,4B,6-14,15B,16B,17-21	900452	ADJ LENGTH LOCKING FLIP-UP ASSM FULL	PAIR - FULL PAD ARM ASSM
1,2,4B,6-14,15B,16B,17-21	881290	ADJ LENGTH LOCKING FLIP-UP FULL PAD	RIGHT - FULL PAD ARM ASSM
1,2,4B,6-14,15B,16B,17-21	881291	ADJ LENGTH LOCKING FLIP-UP FULL PAD	LEFT - FULL PAD ARM ASSM
1,2,4B,6-14,15A,16A,17-21	900453	ADJ LENGTH LOCKING FLIP-UP ASSM DESK	PAIR - DESK PAD ARM ASSM
1,2,4B,6-14,15A,16A,17-21	881292	ADJ LENGTH LOCKING FLIP-UP DESK PAD	RIGHT - DESK PAD ARM ASSM
1,2,4B,6-14,15A,16A,17-21	881293	ADJ LENGTH LOCKING FLIP-UP DESK PAD	LEFT - DESK PAD ARM ASSM

ADJUSTABLE LOCKING FLIP-UP ARMREST (USE ON DAB FRAMES ONLY) (03/12/2018)

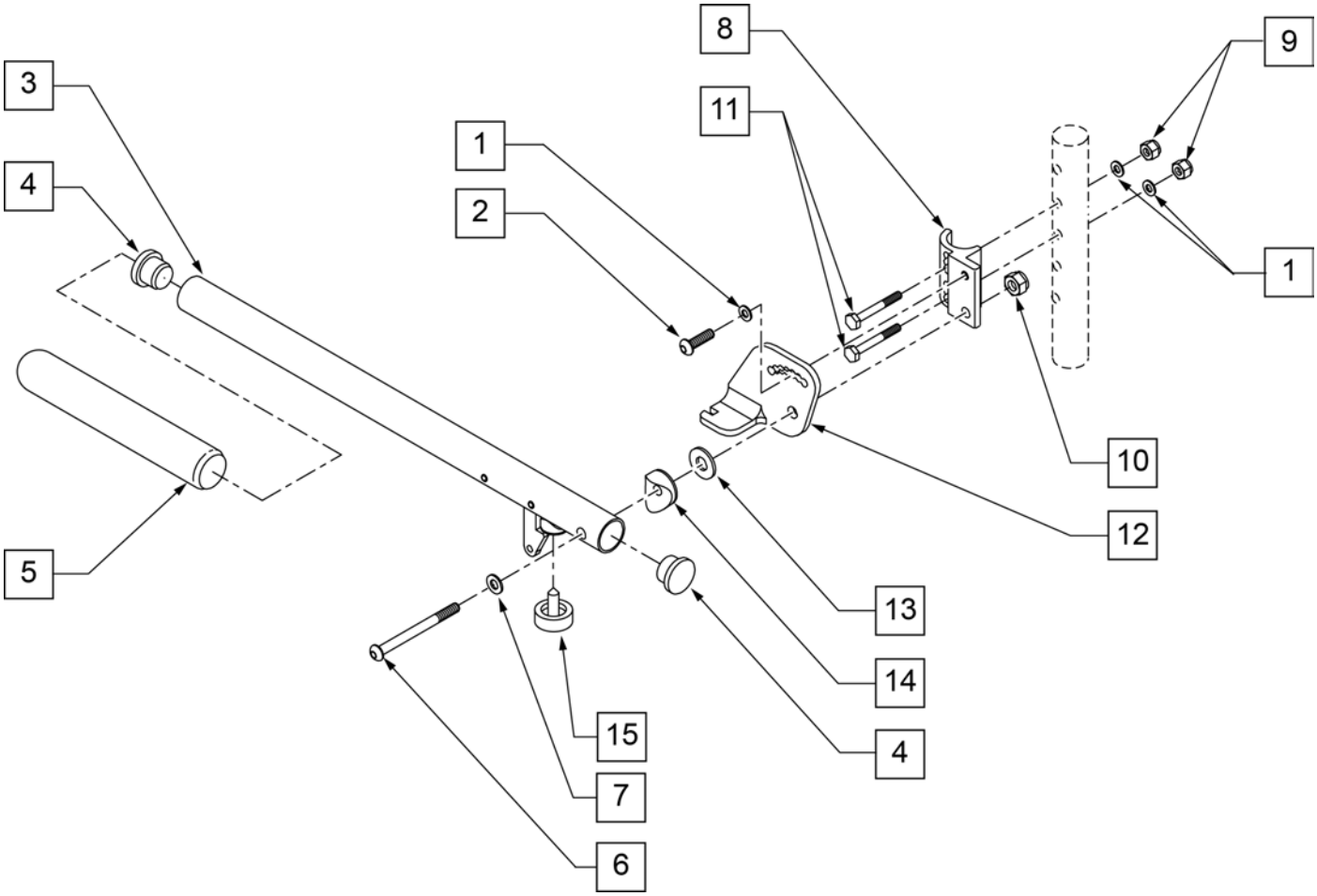

Pos.	Item Number	Description	Remarks
1	106943	1/4 AN WASHER FLAT	
2	107025	1/4-28 x 1/2 BH C/S	
4	561002	1" INSERT PLUG .083	
5	560640	9 x .93 x .155 FOAM GRIP	
6	106983	5/16-18 x 2 BH C/S SHT THREAD	
7	106947	5/16 WASHER FLAT THIN	
8	550168	ADJ LOCK FLIP-UP ARM MNT R	
8	550169	ADJ LOCK FLIP-UP ARM MNT L	
9	106935	1/4-28 NYLOCK NUT THIN	
10	202117	5/16-18 NYLOCK NUT THICK BLK	
11	106972	1/4-28 x 1 1/2 G8 HEX C/S	
12	550474	ADJ FLIP-BACK ARM BRACKET R	
12	550475	ADJ FLIP BACK ARM BRACKET L	
13	561016	1" WASHER 5/16" HOLE	
14	561006	1" SADDLE 5/16" HOLE	
15	560252	1" COVED STEM BUMPER	
3-5	880274	ADJ FLIP-BACK TUBE W/LATCH	
1,2,6,8-10	881272	ADJ LOCK F-UP ARMREST RETRO R	USE FOR ARMRST PRIOR TO 7/22/96
1,2,6,8-10	881273	ADJ LOCK F-UP ARMREST RETRO L	USE FOR ARMRST PRIOR TO 7/22/96
1-15	880272	ADJ FLIP BACK ARMREST R	
1-15	880273	ADJ FLIP BACK ARMREST L	
1-15	900449	ADJ LOCK FLIP-UP ARMREST ASSM	PAIR

ADULT SINGLE POST ARMREST RECEIVER (12/23/2019)

Note: used on Quickie 2 chairs w/ S/N Prefix Q2.
Note: used on Zippie GS chairs w/ S/N Prefix ZGS & ZGE.
Note: used on Quickie Iris chairs S/N Prefix CGT & prior to IRS-007726 & IRSE-008701.
Note: used on Quickie LX/LXI CHAIRS.
Note: used on Zippie Z-BOP chairs.
Note: used on Zippie TS chairs.
Note: used on Breezy 600 chairs.

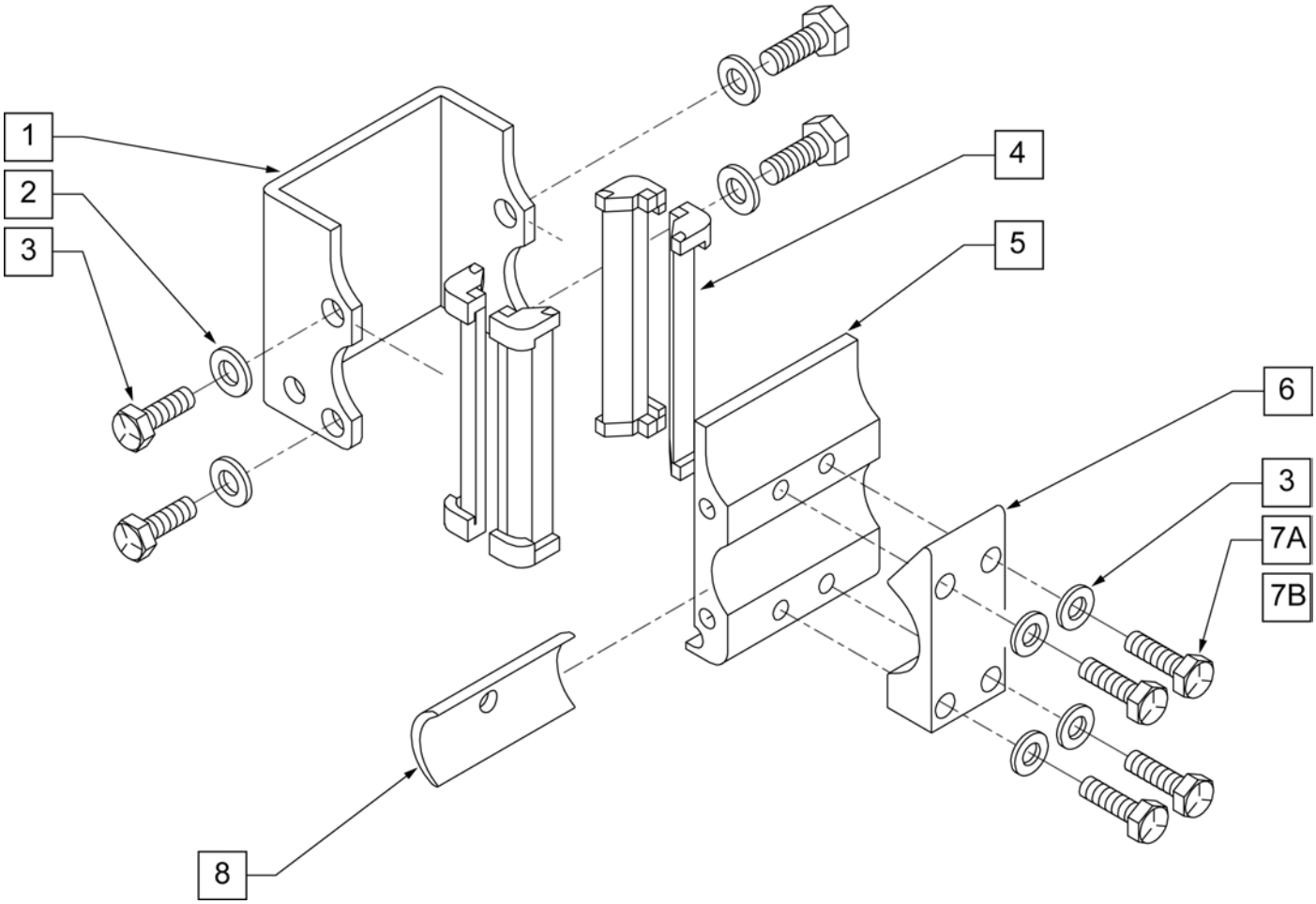

Pos.	Item Number	Description	Remarks
1	550485	HEIGHT ADJUSTABLE RECEIVER CHANNEL	
2	221096	1/4-28 x 5/8 HEX C/S	
3	106943	1/4 AN WASHER FLAT	
4	561134	HEIGHT ADJUSTABLE RECEIVER LINER	
5	550483	HEIGHT ADJUSTABLE RECEIVER STD	
6	550490	HEIGHT ADJUSTABLE RECEIVER CLAMP 4 HOLE	
7A	106971	1/4-28 x 1 3/8 HEX C/S	
7B	106972	1/4-28 X 1 1/2 G8 HEX C/S	use with receiver spacer
8	550486	HEIGHT ADJUSTABLE RECEIVER SPACER	Used to space Armrest 1/8" from frame on each side
1-5	880230	HEIGHT ADJUSTABLE RECEIVER STD W/O CLAMP	
1-7A	880240	HEIGHT ADJUSTABLE RECEIVER STD W/ CLAMP	
1-7B,8	880245	HEIGHT ADJUSTABLE RECEIVER STD W/ CLAMP AND SPACER	

KIDS SINGLE POST ARMREST RECEIVER

(12/23/2019)

Note: available on Quickie Iris S/N Prefix CGT & prior to IRS-007726 & IRSE-008701.

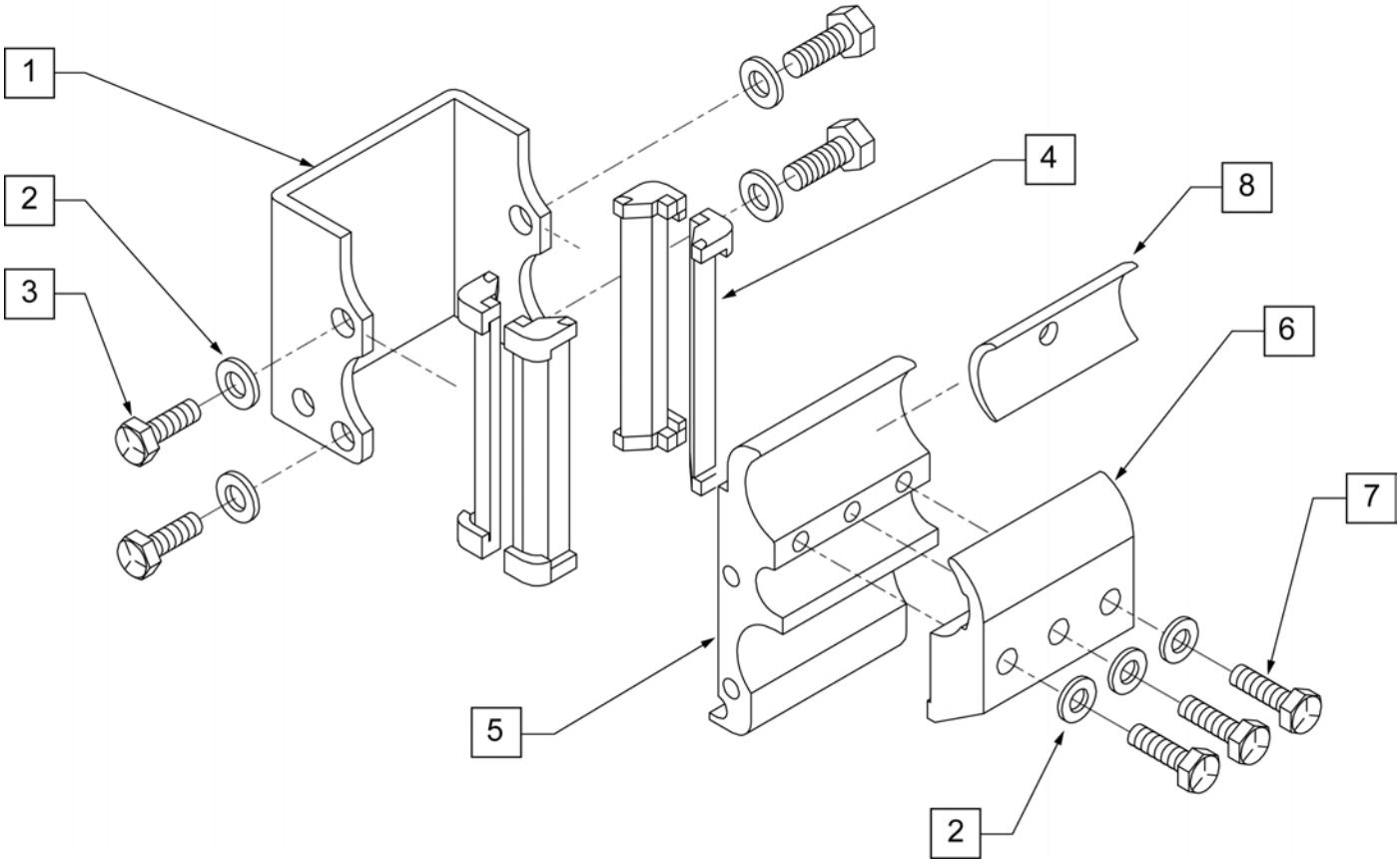

Pos.	Item Number	Description	Remarks
1	550485	HEIGHT ADJUSTABLE RECEIVER CHANNEL	
2	106943	WASHER FLAT AN 1/4 ROHS	
3	221096	1/4-28 x 5/8 HEX C/S	
4	561134	HEIGHT ADJUSTABLE RECEIVER LINER	
5	550484	HEIGHT ADJUSTABLE RECEIVER LOW	
6	550491	HEIGHT ADJUSTABLE RECEIVER CLAMP LOW	
7	221133	1/4-28 x 1 1/2 G8 HEX C/S	
8	550486	HEIGHT ADJUSTABLE RECEIVER SPACER	Used to space Armrest 1/8" from frame on each side
1 -5	880231	HEIGHT ADJUSTABLE RECEIVER KIDS W/O CLAMP	
1 -7	880241	HEIGHT ADJUSTABLE RECEIVER KIDS W/ CLAMP	
1 -8	880249	HEIGHT ADJUSTABLE RECEIVER KIDS W/ CLAMP AND SPACER	

SINGLE POST ARMREST RECEIVER - STD

Note: clamp mounts to 1" tubing.

Note: used on Quickie Iris chairs after S/N IRS-007726 & IRSE-008701 and prior to IRS-063000 & IRSE-083000.

Note: used on Zippie Iris chairs prior to S/N ZRS-051000 & ZRSE-058000.

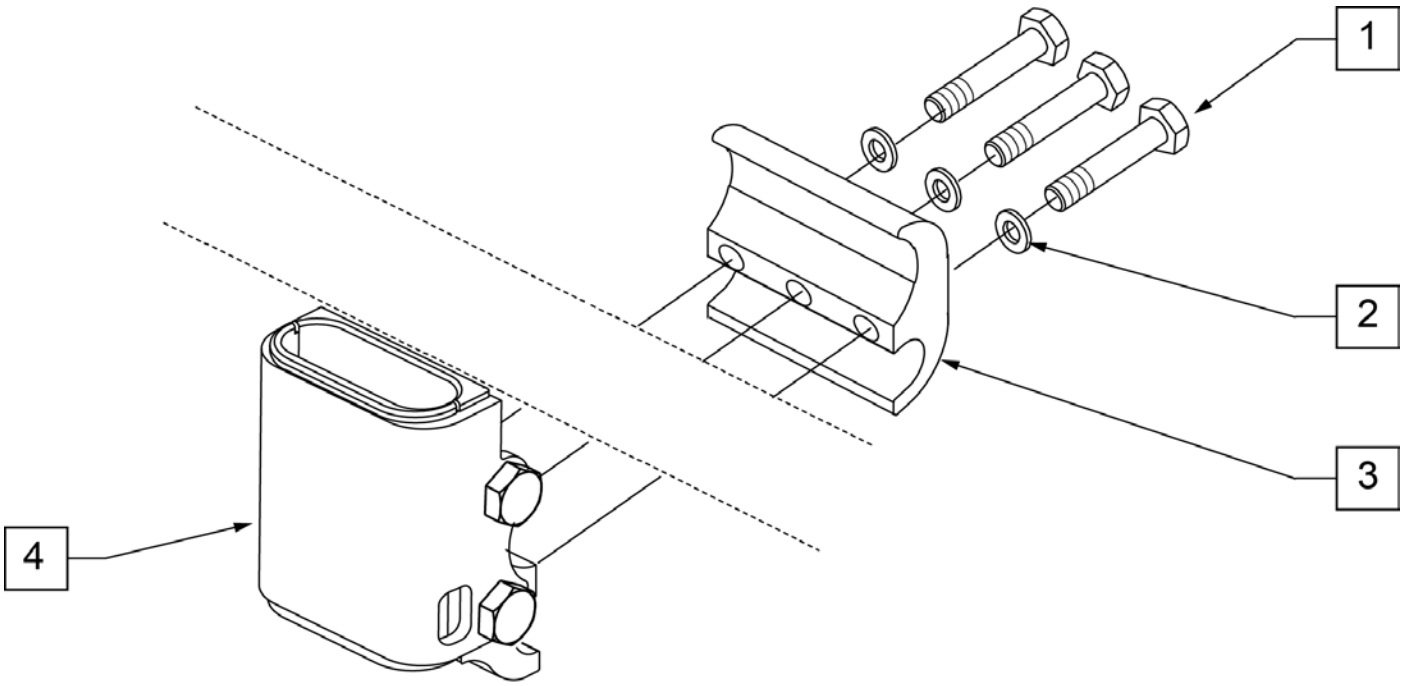

STANDARD
RECEIVER

Pos.	Item Number	Description
1	106970	HHCS 1/4 -28 x 1 1/4 ROHS
2	106943	WASHER FLAT AN 1/4 ROHS
3	111405	CLAMP ARMREST INNER
4	112422	RECEIVER ARMREST STANDARD
1-4	118457	RECEIVER ARMREST STANDARD ASSM

Note: clamp mounts to 1" tubing.

Note: used on Quickie Iris chairs after S/N IRS-007726 & IRSE-008701 and prior to IRS-063000 & IRSE-083000.

Note: used on Zippie Iris chairs prior to S/N ZRS-051000 & ZRSE-058000.

Note: used on Zippie 2 chairs w/ S/N Prefix Z2A.

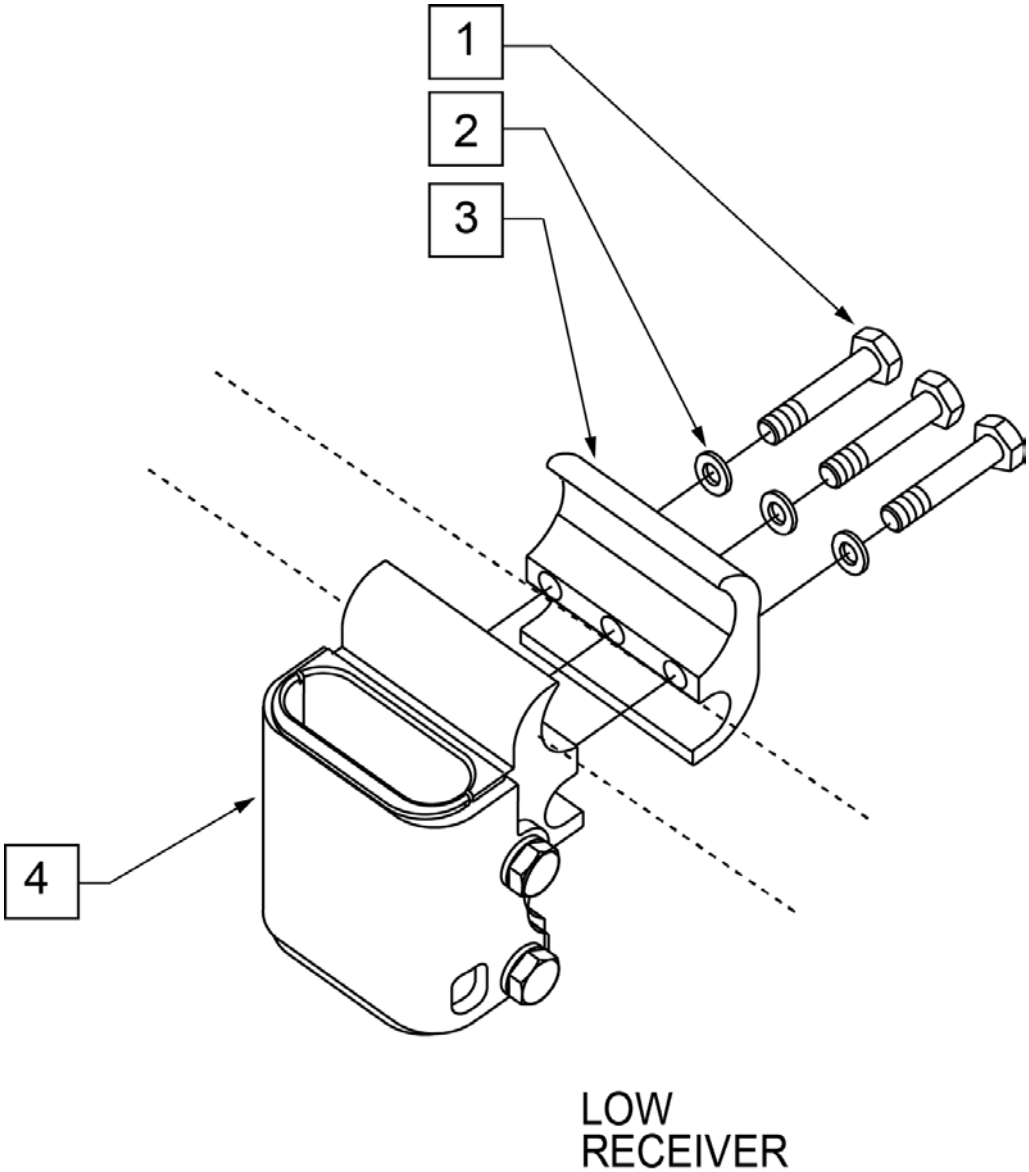

Pos.	Item Number	Description
1	107360	HHCS 1/4 -28 x 1 1/4 PL ROHS
2	106943	WASHER FLAT AN 1/4 ROHS
3	111405	CLAMP ARMREST INNER
4	112423	RECEIVER ARMREST LOW
1-4	118458	REC ARMREST LOW ASSM

Note: available on chairs after S/N IRS-063000 & IRSE-083000 and ZRS-051000 & ZRSE-058000.

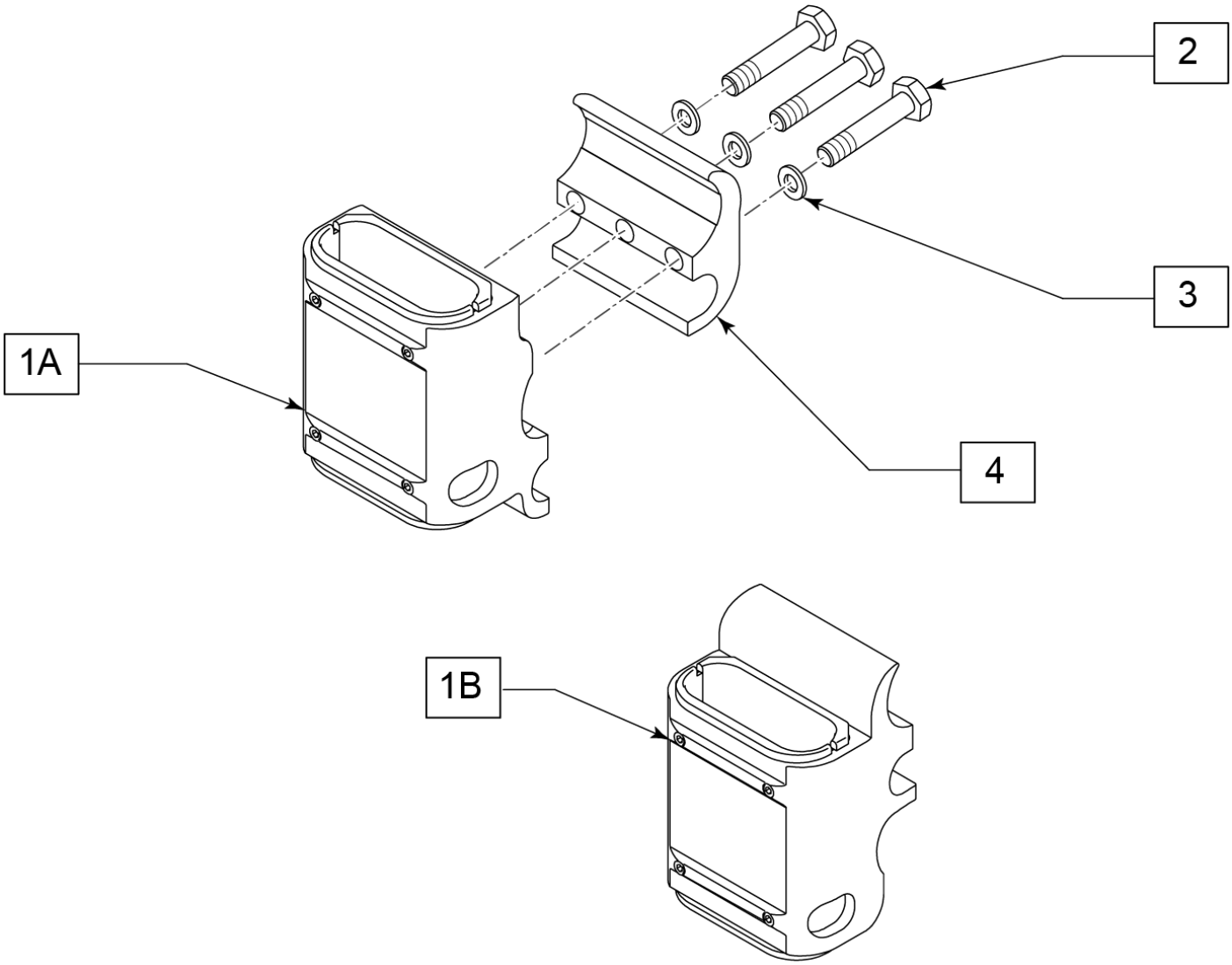

Pos.	Item Number	Description
1A,2-4	161570	STANDARD SPHA RECEIVER
1B,2-4	161571	LOW SPHA RECEIVER

DUAL POST ARMREST RECEIVER -FIXED

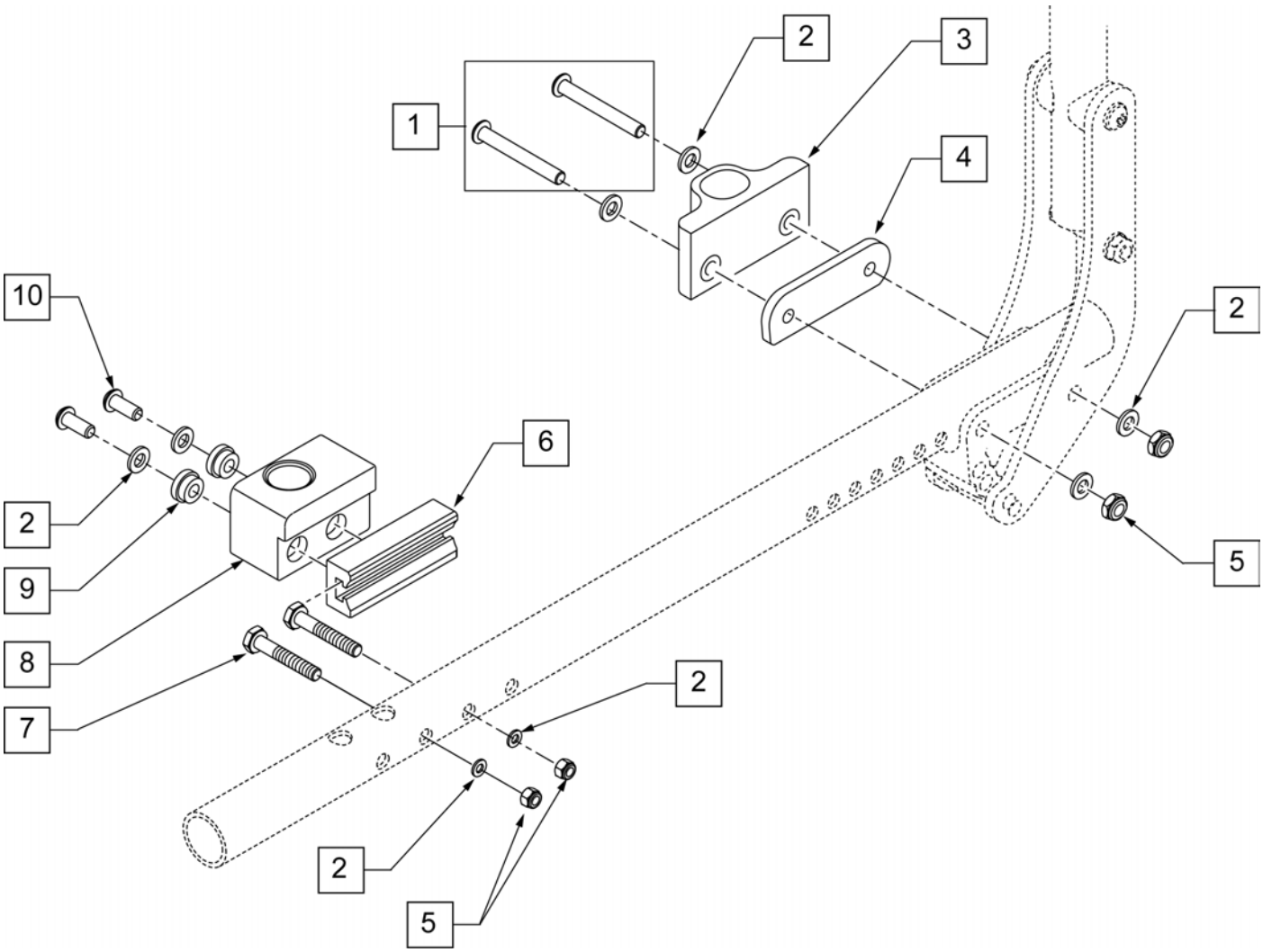

Pos.	Item Number	Description	Remarks
1	106967	BHCS 1/4 -28 x 2 1/2 SHLDR ROHS	
2	106943	WASHER FlAT AM 1/4 ROHS	
3	552190	RECEIVER ARMREST DUAL POST REAR FIXED	
4	506140	ADAPTER PVT DP UNIV ARMREST IRIS	
5	106935	NUT NYLOCK THIN 1/4 -28 ROHS	
6	506137	ADAPTER FR UNI RECEIVER 1.0 OFFSET	
7	106972	HHCS 1/4 -28 x 1 1/2 ROHS	
8	506366	UNIVERSAL ARMREST RECEIVER ASSM RH	RIGHT
8	506367	UNIVERSAL ARMREST RECEIVER ASSM LH	LEFT
9	340143	BUSHING .257 ID x .25 LG SST	
10	226313	BHCS 1/4 -28 x 5/8 SHLDR ROHS	
2,6-10	506408	UNI DP ARM RCV ASSM RFH QTS/IR	RIGHT
2,6-10	506409	UNI DP ARM RCV ASSM LFH QTS/IR	LEFT
2,4-10	920598	DPST/DPST H/A ARM RCVR KIT	KIT

DUAL POST ARMREST RECEIVER -FLIP BACK

(07/2010)

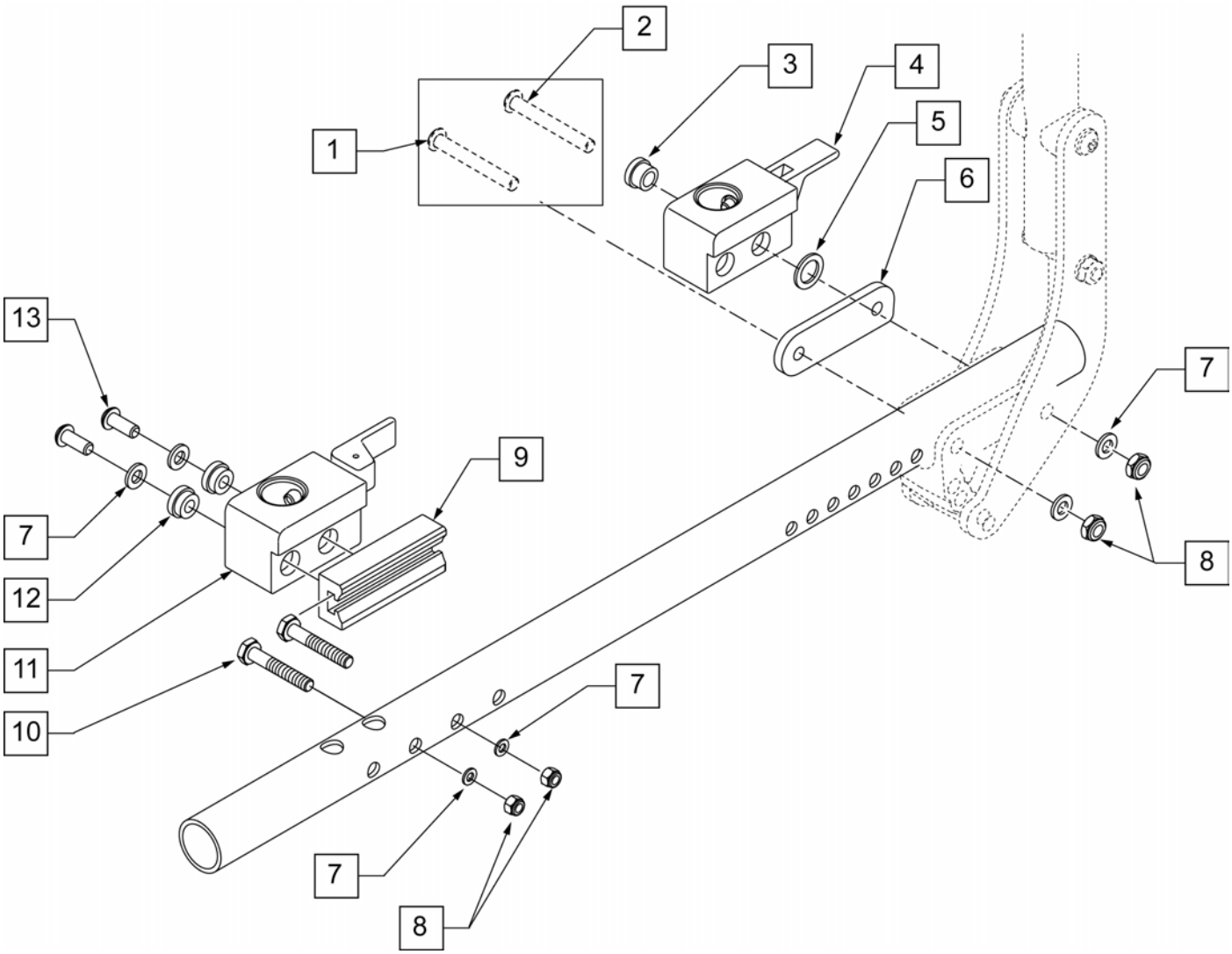

Pos.	Item Number	Description	Remarks
1	106966	BHCS 1/4 -28 x 2 1/4 SHLDR ROHS	
2	106967	BHCS 1/4 -28 x 2 1/2 SHLDR ROHS	
3	340144	BUSHING STEEL .257 ID x .346 LG SST	
4	506368	UNIVERSAL ARMREST RECEIVER ASSM RV	RIGHT - REAR
4	506369	UNIVERSAL ARMREST RECEIVER ASSM LV	LEFT -REAR
5	561273	1/2 x 3/4 x .060 NYLON WASHER	
6	506140	BACKREST PIVOT ARMREST RECEIVER	
7	106943	WASHER FlAT AM 1/4 ROHS	
8	106935	NUT NYLOCK THIN 1/4 -28 ROHS	
9	506137	ADAPTER FR UNI RECEIVER 1.0 OFFSET	
10	106972	HHCS 1/4 -28 x 1 1/2 ROHS	
11	506366	UNIVERSAL ARMREST RECEIVER ASSM RH	RIGHT
11	506367	UNIVERSAL ARMREST RECEIVER ASSM LH	LEFT
12	340143	BUSHING .257 ID x .25 LG SST	
13	226313	BHCS 1/4 -28 x 5/8 SHLDR ROHS	
7-13	506408	UNI DP ARM RCV ASSM RFH QTS/IR	RIGHT
7-13	506409	UNI DP ARM RCV ASSM LFH QTS/IR	LEFT
1-8	506410	UNI DP ARM RCVR ASSM RRV IRIS	RIGHT

Pos.	Item Number	Description	Remarks
1-8	506411	UNI DP ARM RCVR ASSM LRV IRIS	LEFT
1-13	920599	DPST FB/DPST FB HA ARM RCVR KIT	KIT

JAY FULL FOOT BOX WITH DIVIDER

[02/19/2020]

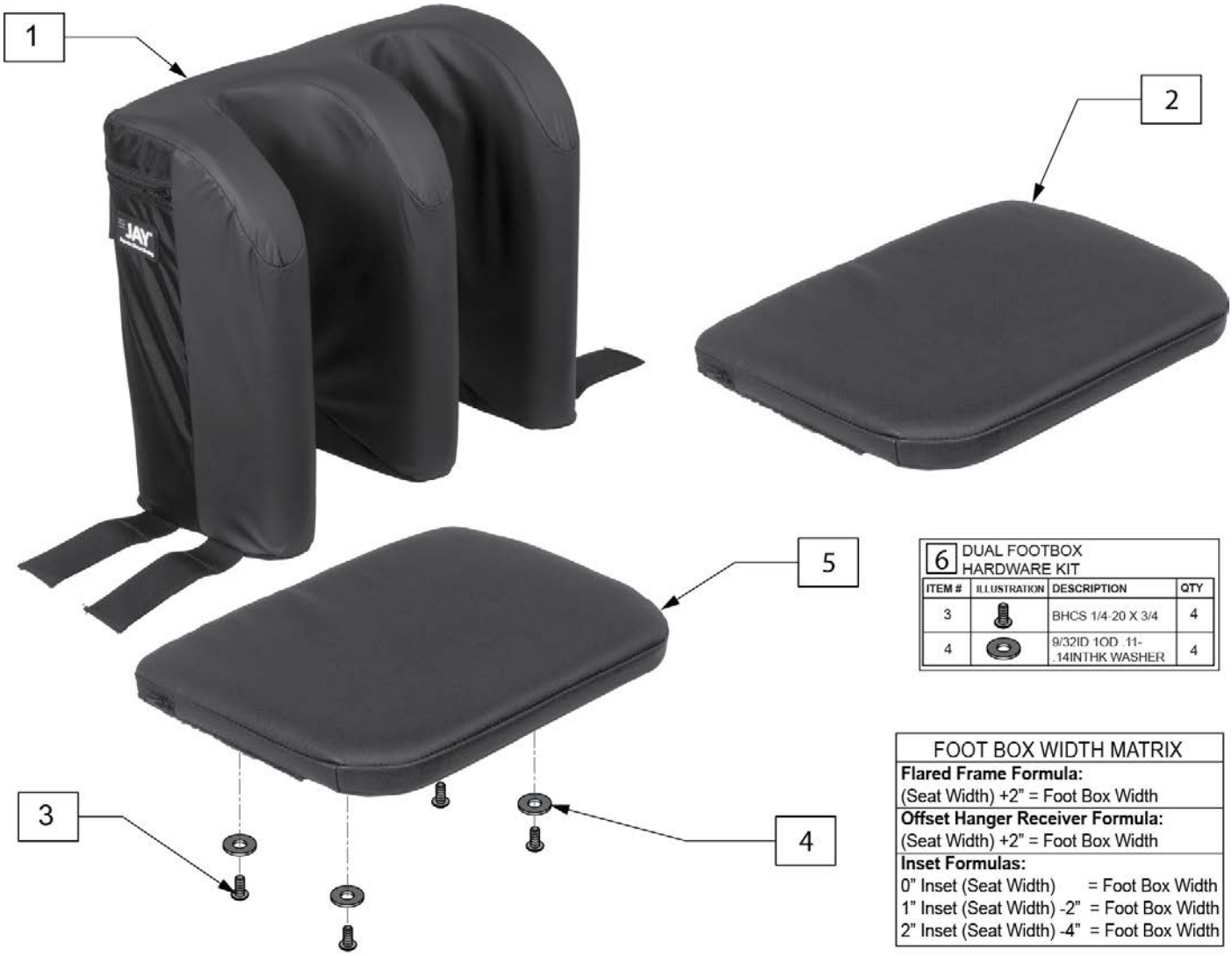

6 DUAL FOOTBOX HARDWARE KIT

ITEM #	ILLUSTRATION	DESCRIPTION	QTY
3		BHCS 1/4-20 X 3/4	4
4		9/32ID 1OD .11-.14INTHK WASHER	4

FOOT BOX WIDTH MATRIX

Flared Frame Formula:
(Seat Width) +2" = Foot Box Width

Offset Hanger Receiver Formula:
(Seat Width) +2" = Foot Box Width

Inset Formulas:
0" Inset (Seat Width) = Foot Box Width
1" Inset (Seat Width) -2" = Foot Box Width
2" Inset (Seat Width) -4" = Foot Box Width

Pos.	Item Number	Description	Remarks
1	CCFOOTSS22	FUL FOOTBX 22W SEP CALF CVR SD	Cover only
1	CCFOOTSS20	FUL FOOTBX 20W SEP CALF CVR SD	Cover only
1	CCFOOTSS18	FUL FOOTBX 18W SEP CALF CVR SD	Cover only
1	CCFOOTSS16	FUL FOOTBX 16W SEP CALF CVR SD	Cover only
1	CCFOOTTS22	FUL FOOTBX 22W SEP CALF CVR TL	Cover only
1	CCFOOTTS20	FUL FOOTBX 20W SEP CALF CVR TL	Cover only
1	CCFOOTTS18	FUL FOOTBX 18W SEP CALF CVR TL	Cover only
1	CCFOOTTS16	FUL FOOTBX 16W SEP CALF CVR TL	Cover only
2	CCFOOTS22	FULL FOOTBOX 22W FOOT COVER	Cover only
2	CCFOOTS20	FULL FOOTBOX 20W FOOT COVER	Cover only
2	CCFOOTS18	FULL FOOTBOX 18W FOOT COVER	Cover only
2	CCFOOTS16	FULL FOOTBOX 16W FOOT COVER	Cover only
5	132826	JAY FOOTBOARD ASM 12W KIT	Cover, foam & board
5	132827	JAY FOOTBOARD ASM 14W KIT	Cover, foam & board
5	132828	JAY FOOTBOARD ASM 16W KIT	Cover, foam & board
5	132829	JAY FOOTBOARD ASM 18W KIT	Cover, foam & board
5	132830	JAY FOOTBOARD ASM 20W KIT	Cover, foam & board

Pos.	Item Number	Description	Remarks
5	132831	JAY FOOTBOARD ASM 22W KIT	Cover, foam & board
6	HDWFOOT	DUAL FOOTBOX HRDWR KIT	4 screws and washers

Pos.	Item Number	Description	Remarks
1	CCFOOT22	FUL FOOTBX 22W CALF CVR STD	Cover only - no pads included
1	CCFOOT20	FUL FOOTBX 20W CALF CVR STD	Cover only - no pads included
1	CCFOOT18	FUL FOOTBX 18W CALF CVR STD	Cover only - no pads included
1	CCFOOT16	FUL FOOTBX 16W CALF CVR STD	Cover only - no pads included
1	CCFOOT14	FUL FOOTBX 14W CALF CVR STD	Cover only - no pads included
1	CCFOOT12	FUL FOOTBX 12W CALF CVR STD	Cover only - no pads included
1	CCFOOTT22	FUL FOOTBX 22W CALF CVR TAL	Cover only - no pads included
1	CCFOOTT20	FUL FOOTBX 20W CALF CVR TAL	Cover only - no pads included
1	CCFOOTT18	FUL FOOTBX 18W CALF CVR TAL	Cover only - no pads included
1	CCFOOTT16	FUL FOOTBX 16W CALF CVR TAL	Cover only - no pads included
2	CCFOOTS22	FULL FOOTBOX 22W FOOT COVER	Cover only - no pads included
2	CCFOOTS20	FULL FOOTBOX 20W FOOT COVER	Cover only - no pads included
2	CCFOOTS18	FULL FOOTBOX 18W FOOT COVER	Cover only - no pads included
2	CCFOOTS16	FULL FOOTBOX 16W FOOT COVER	Cover only - no pads included
2	CCFOOTS14	FULL FOOTBOX 14W FOOT COVER	Cover only - no pads included
2	CCFOOTS12	FULL FOOTBOX 12W FOOT COVER	Cover only - no pads included
5	HDWFOOT	DUAL FOOTBOX HRDWR KIT	4 screws and washers

JAY SINGLE FOOT BOX

6 SINGLE FOOTBOX HARDWARE KIT

ITEM #	ILLUSTRATION	DESCRIPTION	QTY
3		BHCS 1/4-20 X 3/4	2
4		9/32ID 1OD .11-.14INTHK WASHER	2

FOOT BOX WIDTH MATRIX
Flared Frame Formula:
(Seat Width) +2" = Foot Box Width
Offset Hanger Receiver Formula:
(Seat Width) +2" = Foot Box Width
Inset Formulas:
0" Inset (Seat Width) = Foot Box Width
1" Inset (Seat Width) -2" = Foot Box Width
2" Inset (Seat Width) -4" = Foot Box Width

Pos.	Item Number	Description	Remarks
1	CCFOOTSS	SINGLE FOOTBOX CALF CVR STD	Cover only
1	CCFOOTST	SINGLE FOOTBOX CALF CVR TAL	Cover only
2	FCFOOTS	SINGLE FOOTBOX FOOT COVER	Cover only
5	132824	JAY FOOTBOARD ASM SINGLE STD	Cover, foam & board
6	HDWSFOOT	SINGLE FOOTBOX HRDWR KIT	2 screws and 2 washers

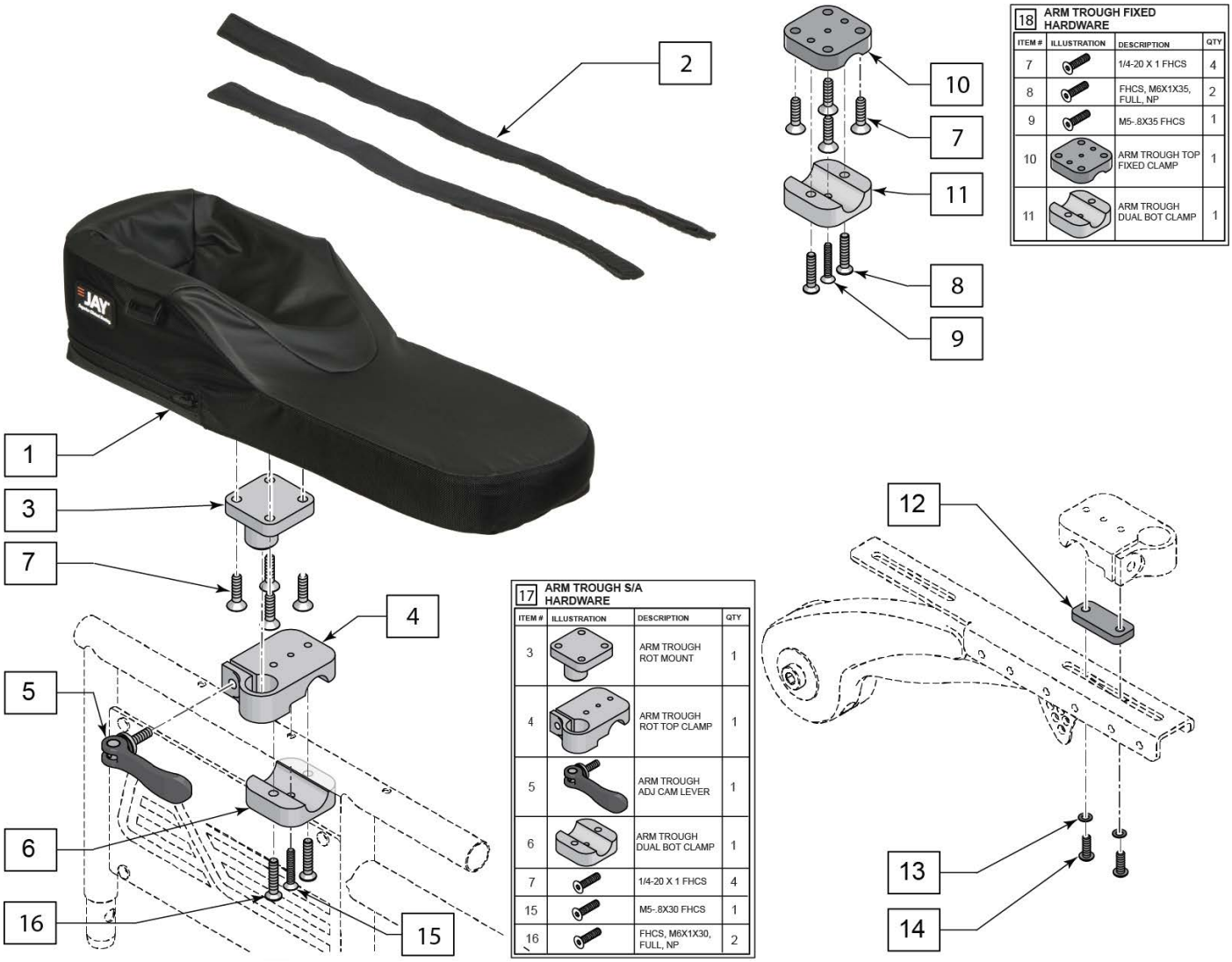

Pos.	Item Number	Description	Remarks
1	CJARM14	ARM TROUGH 14" COVER	
1	CJARM18	ARM TROUGH 18" COVER	
1	CJARM22	ARM TROUGH 22" COVER	
2	JARMSTRAP14	JAY ARMTROUGH 14IN CVR STRAP	
2	JARMSTRAP1822	JAY ARMTRGH 1822IN CVR STRAP	
5	JARMLEVER	ARM TROUGH ADJ CAM LEVER	
12	129821S	JAY ARMREST ADAPTER BRACKET	Used for Cantilever Armrests
17	SAARMHRDW	ARM TROUGH S/A HARDWARE	Dual Post Armrest, mounts to 3/4" round tubing
18	FXARMHRDW	ARM TROUGH FIXED HARDWARE	Dual Post Armrest, mounts to 3/4" round tubing
12-14	JARMADAP	ADAPTER JAY ARM TROUGH CANTI	Required to mount the S/A or Fixed Hardware to Cantilever Armrests

BACKPACKS AND SEAT POUCHES

NOTE: KIDS BACKPACKS DO NOT HAVE ADJUSTABLE STRAPS W/ BUCKLES.

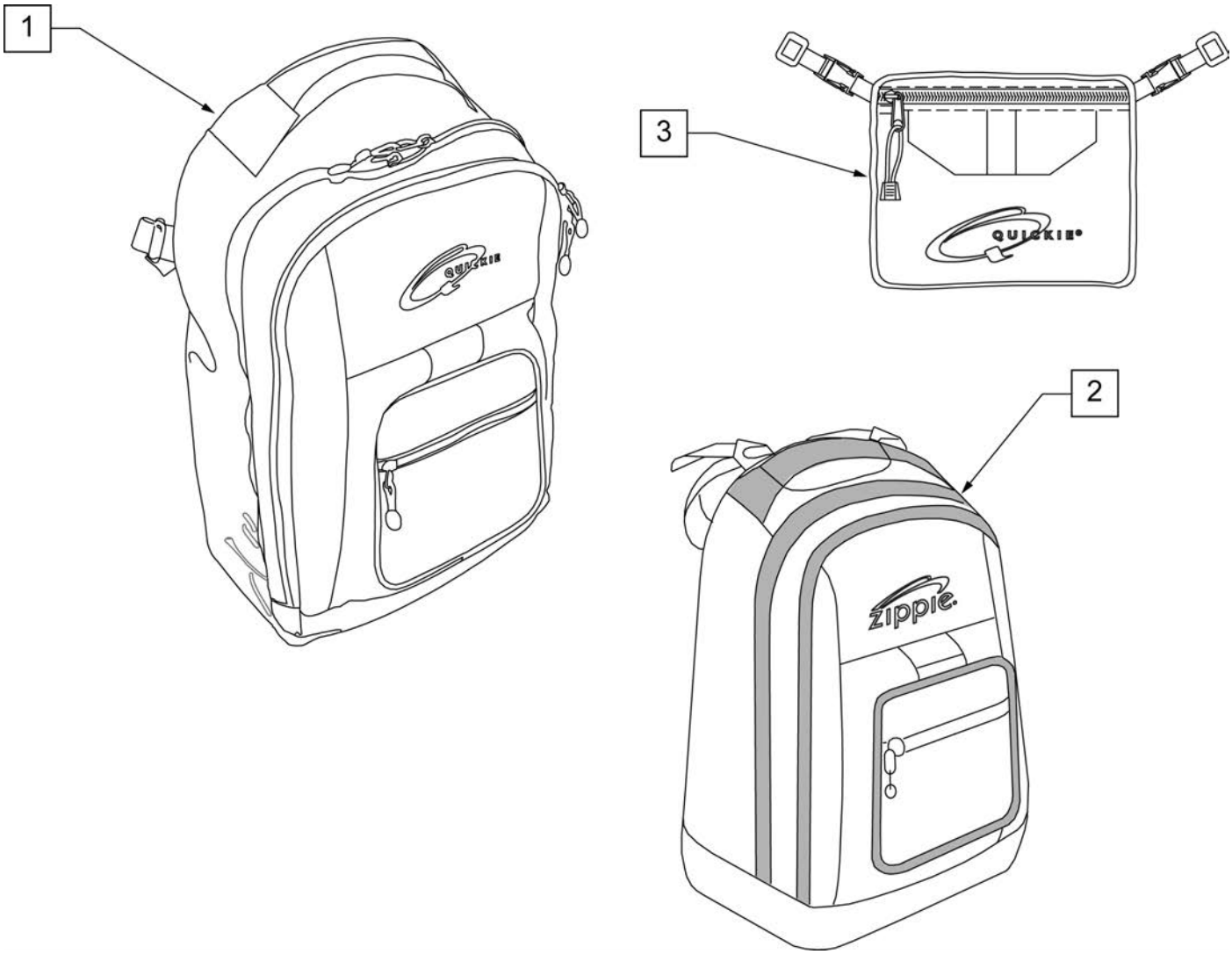

Pos.	Item Number	Description	Remarks
1	750115	BACK PACK QUICKIE	Overall dimensions:width 12.5", height 18.5", depth 6.5"
2	104572	BACKPACK ZIPPIE	Overall dimensions: width 12", height 16.5", depth 4.5"
3	750307	SEAT POUCH QUICKIE	Dimensions: width 8.5", height 6", depth top 2.5", depth bottom 3.5"

QUICKIE SIDE POCKET

(06/23/2018)

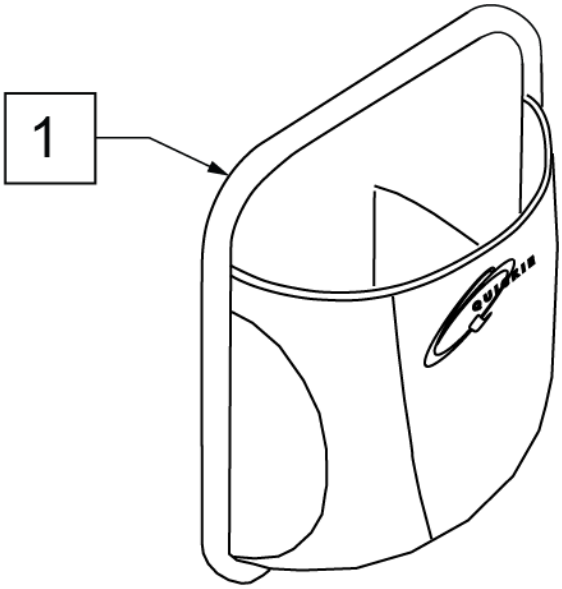

Pos.	Item Number	Description	Remarks
1	013475	QUICKIE SIDE POCKET	Size: 6.5"x 6.5"x 2"

CELL PHONE PACK

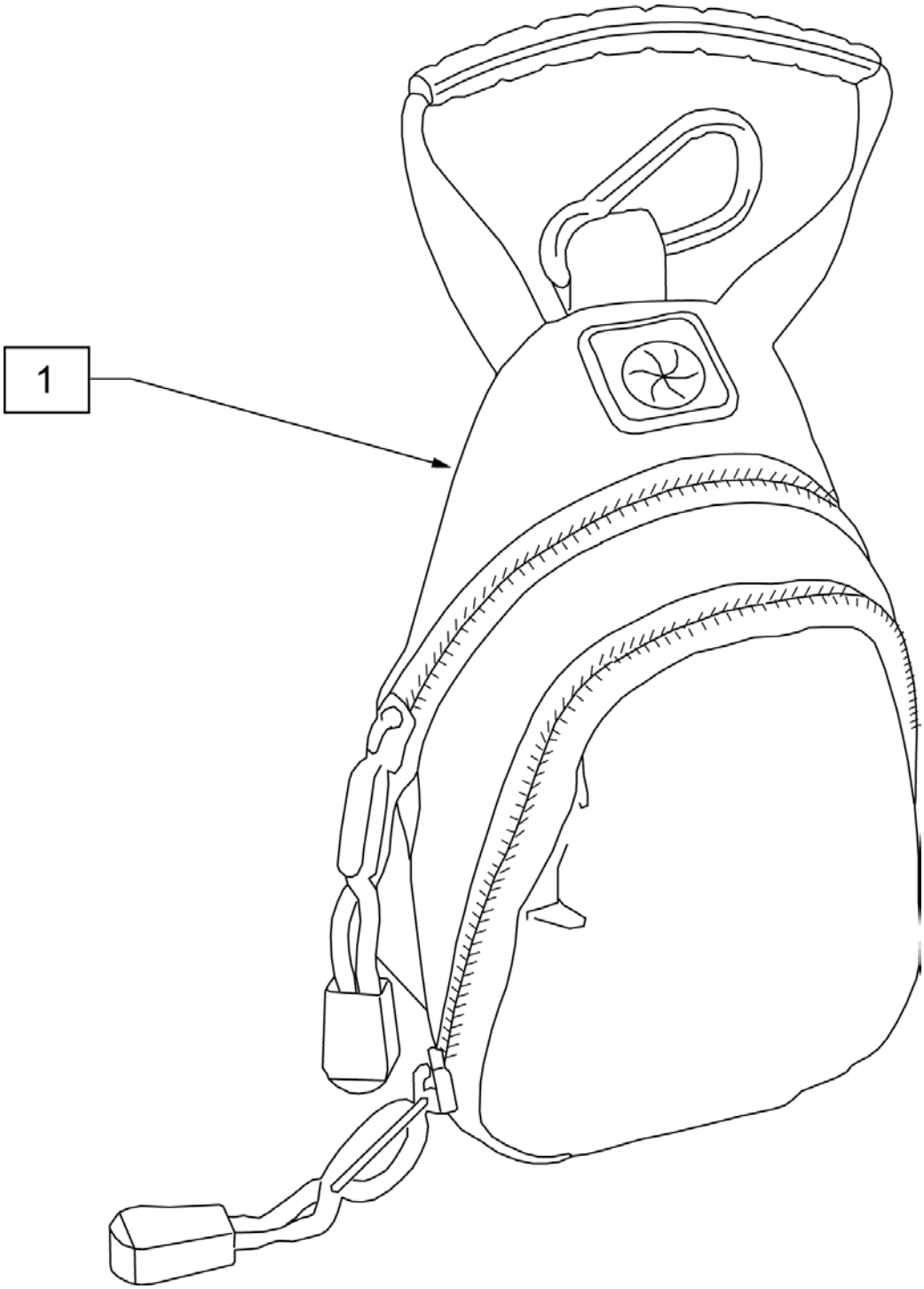

Pos.	Item Number	Description
1	109229	CELL PHONE PACK (ORANGE)

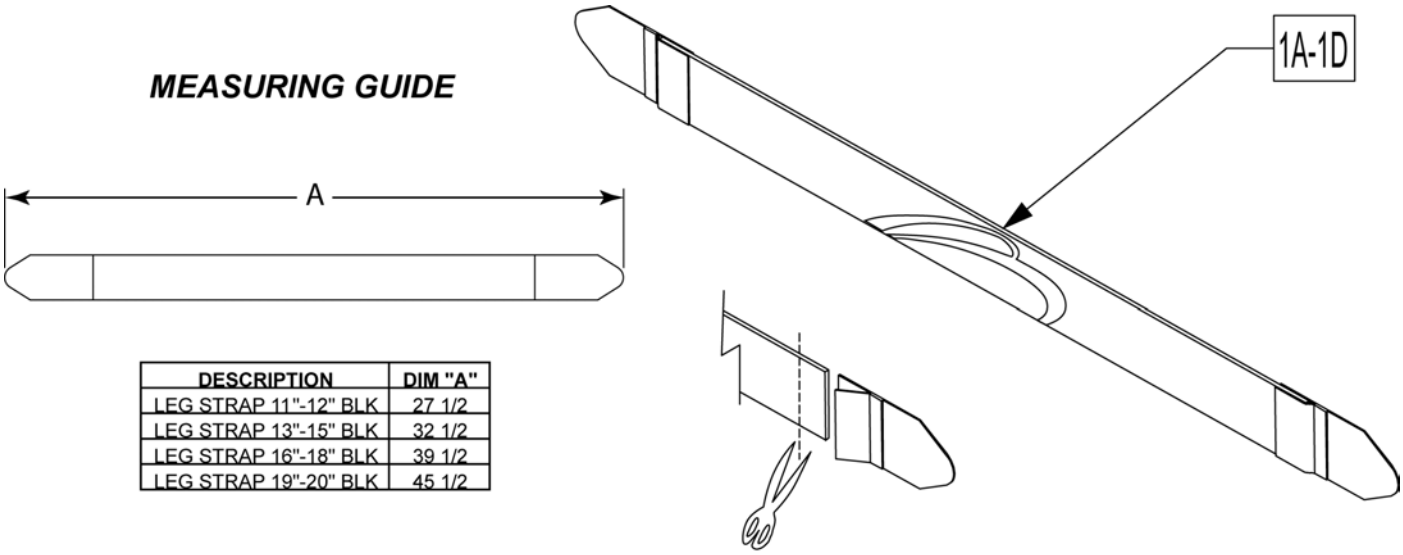

DESCRIPTION	DIM "A"
LEG STRAP 11"-12" BLK	27 1/2
LEG STRAP 13"-15" BLK	32 1/2
LEG STRAP 16"-18" BLK	39 1/2
LEG STRAP 19"-20" BLK	45 1/2

Leg Straps may be custom cut to a smaller size

Pos.	Item Number	Description
1A	113255	LEG STRAP 11"-12" BLK
1B	113256	LEG STRAP 13"-15" BLK
1C	113257	LEG STRAP 16"-18" BLK
1D	113258	LEG STRAP 19"-20" BLK

SOFT FEEL LEG STRAP

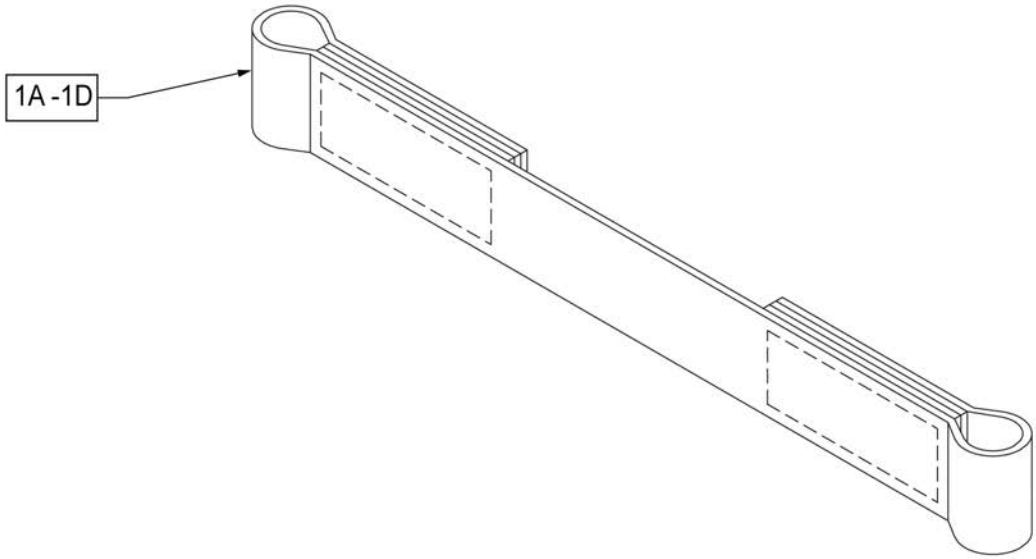

Pos.	Item Number	Description
1A	109356	LEG STRAP SOFT FEEL Q 11 -12"
1B	109357	LEG STRAP SOFT FEEL Q 13 -15"
1C	109366	LEG STRAP SOFT FEEL Q 16 -18"
1D	111487	LEG STRAP SOFT FEEL Q 19 -20"

Note: some items listed may not be available with every chair model or in conjunction with another chair feature.

NOTE: when mounting Positioning Belts to the 5R, GT or GTI, it is recommended to attach the belt by using the Backrest Support Bracket Hardware.

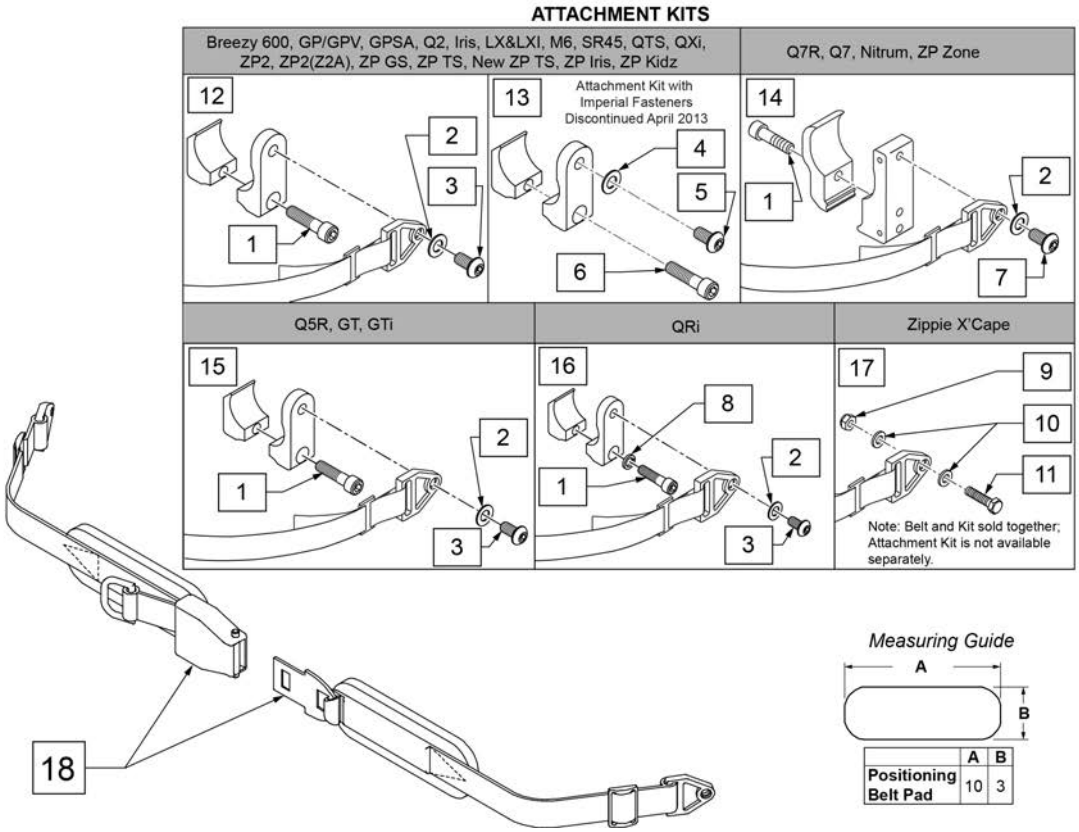

Pos.	Item Number	Description	Remarks
1	102263-003	SHCS M6 X 1 X 25 W/PL INORG	Metric
2	250104	WASHER FLAT M6	Metric
3	103185-005	BHCS M6 X 1 X 12 FULL PL	Metric
4	106943	WASHER FLAT AN 1/4 ROHS	Imperial (standard)
5	226154	1/4-20 X 1/2 BH C/S W/PATCH	Imperial (standard)
6	221116	1/4-20 X 1 SOC HD BLK	Imperial (standard)
7	230113	BHCS M6 X 1 X 12	
8	050129-001	LOCKWASHER HIGH COLLAR M6	
9	104381	NUT HEX NYLOCK M6 X 1.0	
10	107383	WASHER FLAT M6	
11	102268-002	HHCS M6 X 1 X 35 BLK	
12	120750	PSTN BELT CLAMP ASSM PR	Metric; Pair
13	900116	POSITION BELT ATTACHMENT KIT	Set of 2; Imperial (standard)

Pos.	Item Number	Description	Remarks
14	116268	OVAL CLAMP ASSM KIT	Kit contains 1 Clamp
15	159122	POSITIONING BELT CLAMPS PR	Pair
16	123534	POS BELT CLAMP KIT RPO	Set of 2
18	450418-QU	BELT 2" AIRCRAFT BUCKLE	Max length of belt 64"
18	450423-QU	BELT 2" AIRCRAFT BUCKLE W/PAD	Max length of belt 64"
18	450424	BELT 2" AIRCRAFT BKL LONG W/PAD	Max length of belt 72"
18	450425	BELT 2" AIRCRAFT BKL LONG	Max length of belt 72"
18	450419-QU	BELT 2" AIRCRAFT BKL W/QUAD LP	Max length of belt 64"
18	468419	BELT 2" AIRCRAFT BKL W/QD LPCZ	Max length of belt 64"
17,18	136464	AIRCRAFT HIP BELT 2" KIT	ZP Xcape: includes Belt & Attachment Kit
17,18	136465	AIRCRAFT HIP BELT 2" PAD KIT	ZP Xcape: includes Belt & Attachment Kit

NOTE: when mounting Positioning Belts to the 5R, GT or GTI, it is recommended to attach the belt by using the Backrest Support Bracket Hardware.

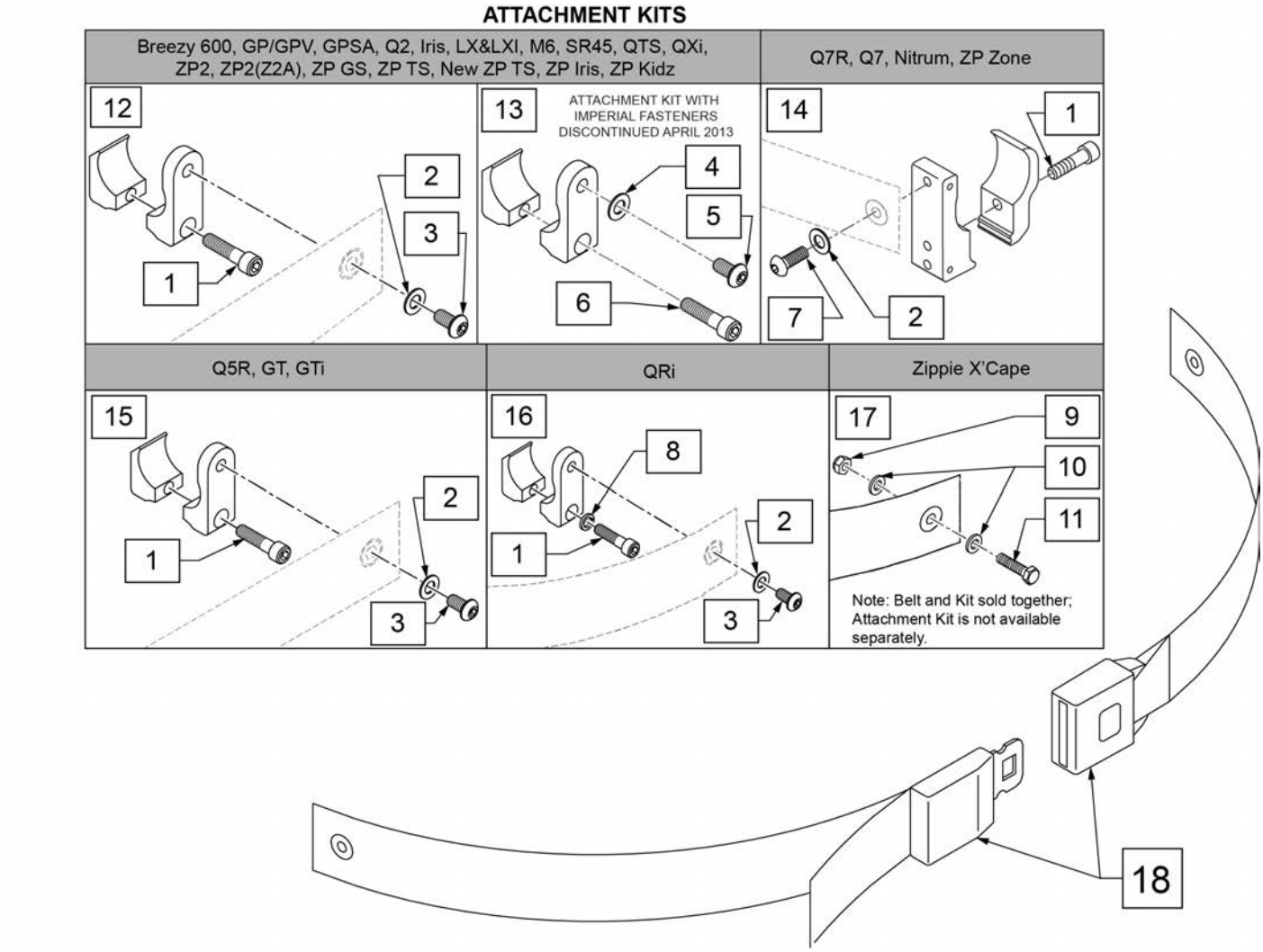

Pos.	Item Number	Description	Remarks
1	102263-003	SHCS M6 X 1 X 25 W/PL INORG	Metric
2	250104	WASHER FLAT M6	Metric
3	103185-005	BHCS M6 X 1 X 12 FULL PL	Metric
4	106943	WASHER FLAT AN 1/4 ROHS	Imperial (standard)
5	226154	1/4-20 X 1/2 BH C/S W/PATCH	Imperial (standard)
6	221116	1/4-20 X 1 SOC HD BLK	Imperial (standard)
7	230113	BHCS M6 X 1 X 12	
8	050129-001	LOCKWASHER HIGH COLLAR M6	
9	104381	NUT HEX NYLOCK M6 X 1.0	
10	107383	WASHER FLAT M6	
11	102268-002	HHCS M6 X 1 X 35 BLK	
12	120750	PSTN BELT CLAMP ASSM PR	Metric; Pair
13	900116	POSITION BELT ATTACHMENT KIT	Set of 2; Imperial (standard)
14	116268	OVAL CLAMP ASSM KIT	Kit contains 1 Clamp

Pos.	Item Number	Description	Remarks
15	159122	POSITIONING BELT CLAMPS PR	
16	123534	POS BELT CLAMP KIT RPO	Set of 2
18	750276	1 1/2" POSITION BELT	AUTOSTYLE-64" Max length of belt.
16,18	124269	AUTO POS BELT W/CLAMPS RPO	QRI: includes Belt & Attachment Kit
17,18	136463	AUTO HIP BELT 1.5" KIT	ZP Xcape: includes Belt & Attachment Kit

DUAL PULL SIDE SQUEEZE POSITIONING BELT

[08/26/2019]

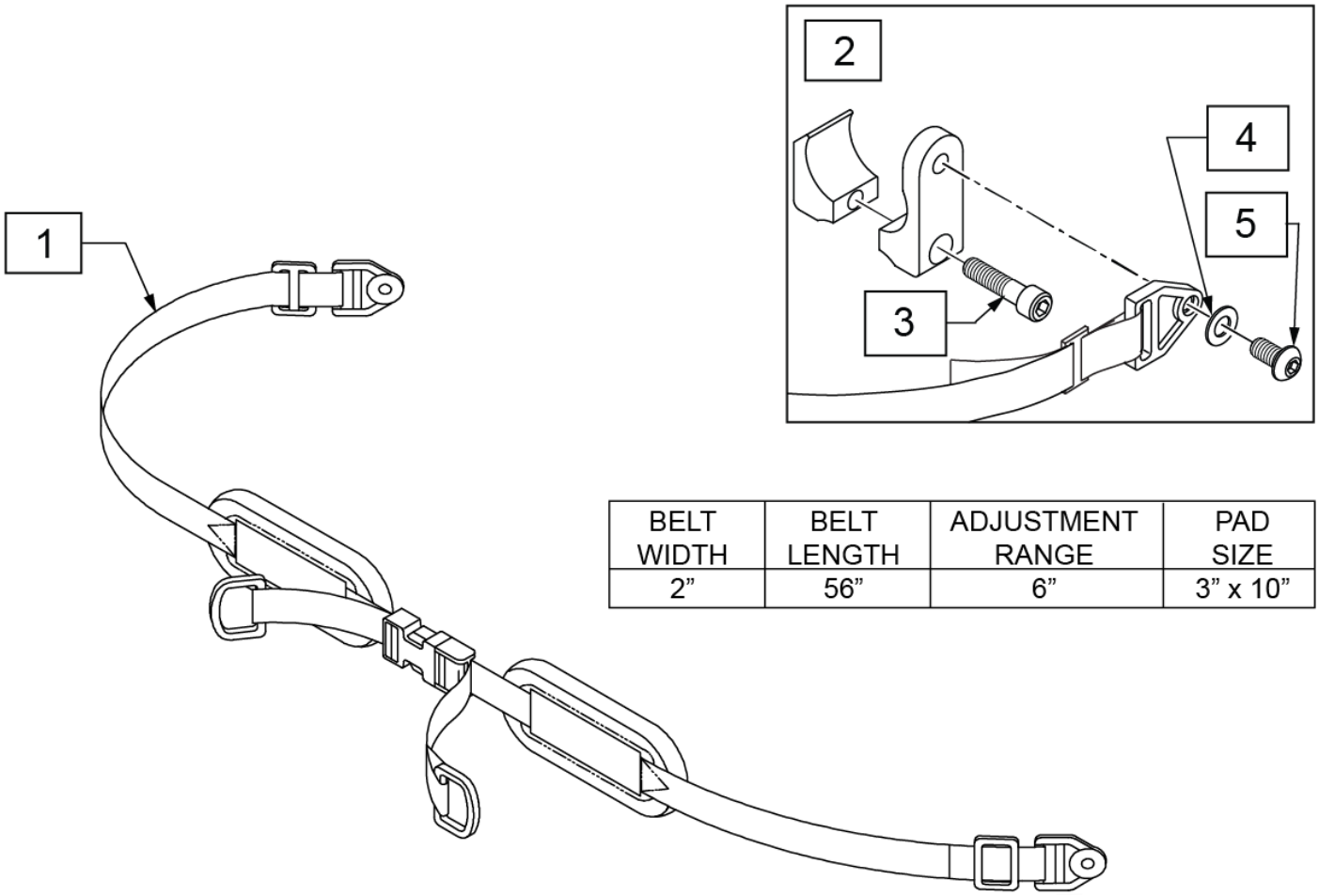

BELT WIDTH	BELT LENGTH	ADJUSTMENT RANGE	PAD SIZE
2”	56”	6”	3” x 10”

Pos.	Item Number	Description
1	450422-QU	BELT 2" DUAL ADJ SQZ BKL PAD
2	120750	PSTN BELT CLAMP ASSM PR
3	102263-003	SHCS M6 X 1 X 25, FULL, PL
4	250104	WASHER FLAT M6
5	103185-005	BHCS M6 X 1 X 12, FULL, PL

JAY 2 POINT POSITIONING BELT

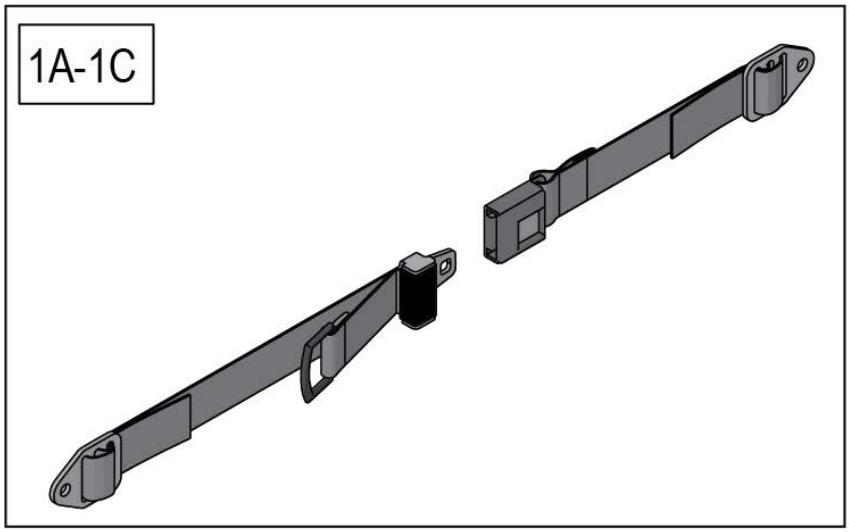

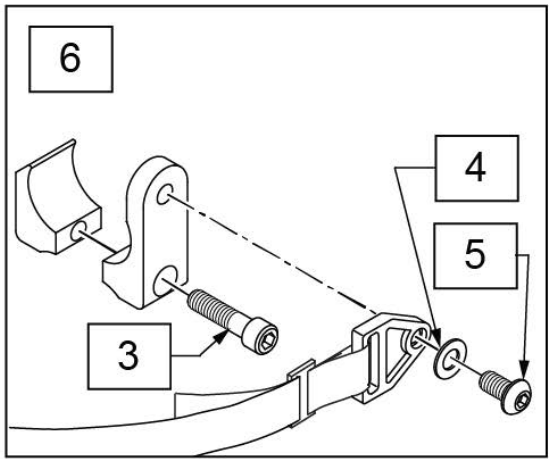

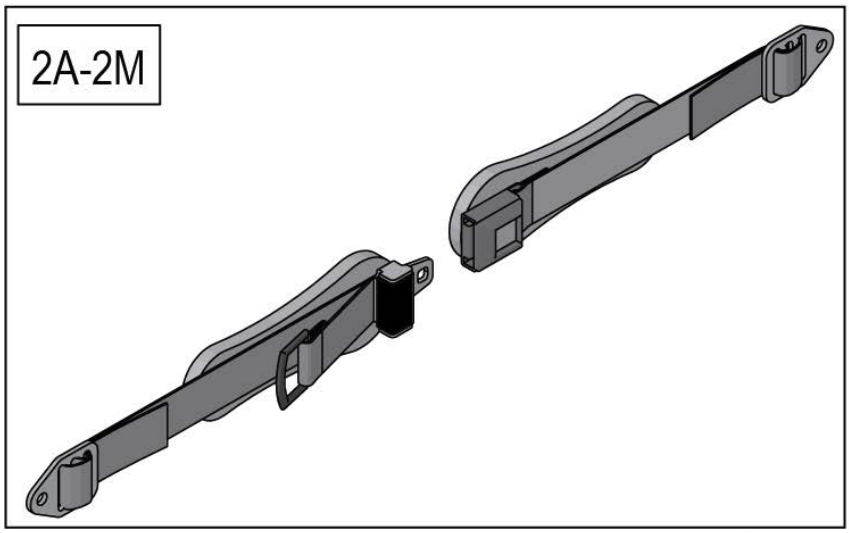

Pos.	Item Number	Description	Remarks
1A	APB5110	APB, 1" PB, SINGLE, NON PADDED	Off-chair option; Non-Padded
1B	APB7210	APB, 1.5" PB, SINGLE, NON-PAD	Non-Padded
1C	APB7310	APD, 2" PB, SINGLE, NON-PADDED	Non-Padded
2A	APB5115	APB 1" PB, SINGLE, 4.5" PAD	Zippie Iris only (4.5")
2B	APB7212	APB, 1.5" PB, SINGLE, SM PADS	Small Pad (7.5")
2C	APB7313	APB, 2" PB, SINGLE, MED PADS	Medium Pad (9.5")
2D	APB5116	APB, 1" PB, SINGLE, 5.5" PAD	Off-chair option; 5.5" Pad
2E	APB5117	APB, 1' PB, SINGLE, 7.5" PAD	Off-chair option; Small Pad (7.5")
2F	APB5125	APB, 1" PB, DUAL, 4.5" PAD	Off-chair option; 4.5" Pad
2G	APB5126	APB, 1" PB, DUAL, 5.5" PAD	Off-chair option; 5.5" Pad
2H	APB5127	APB, 1" PB, DUAL PULL, 7.5" PAD	Off-chair option; Small Pad (7.5")
2J	APB7213	APB, 1.5" PB, SINGLE, MED PADS	Off-chair option; Med Pad
2K	APB7222	APB, 1.5" PB, DUAL, SM PADS	Off-chair option; Small Pad
2L	APB7223	APB, 1.5" PB, DUAL, MED PADS	Off-chair option; Med Pad
2M	APB7314	APB, 2" PB, SINGLE, LG PADS	Off-chair option; Large Pad
3	102263-003	SHCS M6 X 1 X 25 W/PL INORG	
4	250104	WASHER FLAT M6	
5	103185-005	BHCS M6 X 1 X 12 FULL PL	

Pos.	Item Number	Description	Remarks
6	120750	PSTN BELT CLAMP ASSM PR	

PLASTIC SIDE GUARD

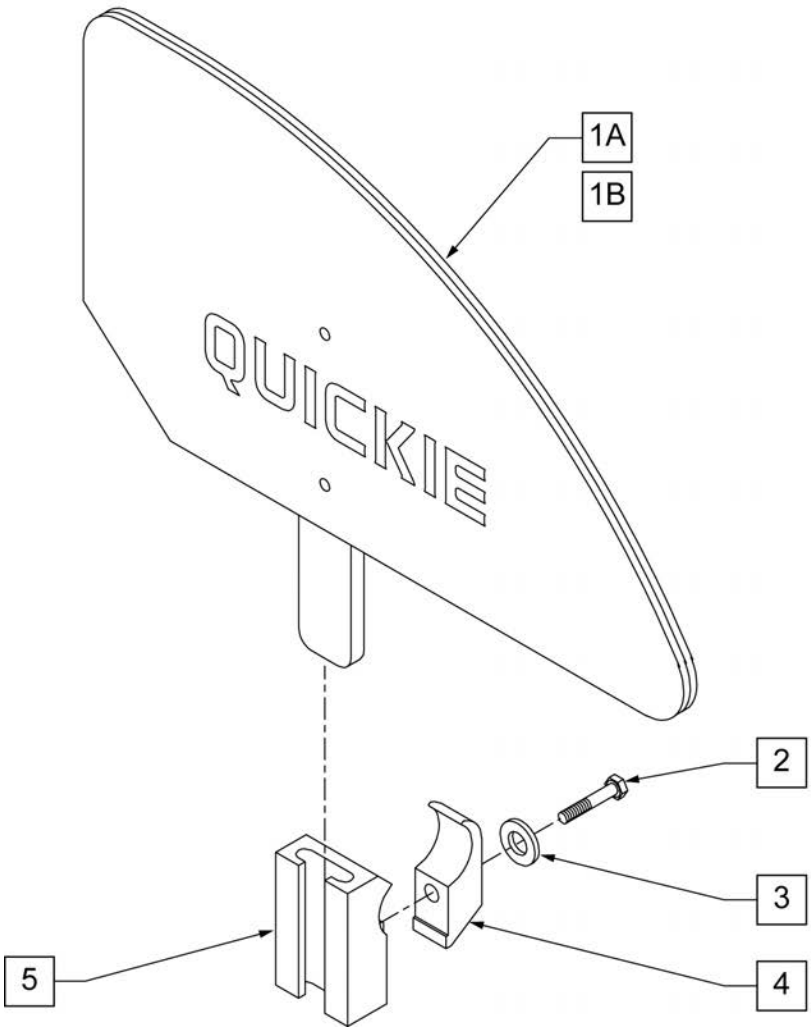

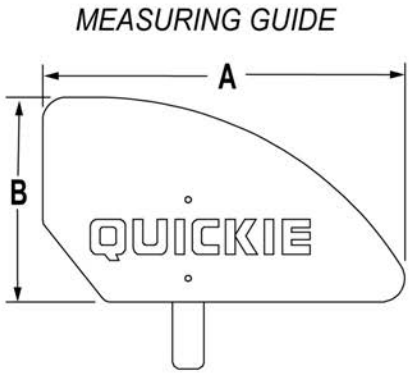

	"A"	"B"
ADULT	12 3/4"	8 5/8"
KIDS	11 1/2"	6 1/2"

NOTE: STANDARD (ADULT) SIDEGUARD FITS 14-20" DEPTHS, KIDS SIDEGUARD FITS 10-13" DEPTHS.

Pos.	Item Number	Description	Remarks
1A	881150	PLASTIC SIDE GUARD KIDS R	
1A	881151	PLASTIC SIDE GUARD KIDS L	
1B	881152	PLASTIC SIDE GUARD STD R	
1B	881153	PLASTIC SIDE GUARD STD L	
2	106971	1/4-28 x 1 3/8 HEX C/S	
3	106944	1/4 AN WASHER FLAT THIN	
4	550251	CLAMP P300 CHARGING/ADJ FL KIDS	
5	550325	SIDE GUARD/KIDZ ARM RECEIVER	
2-5	881200	SIDE GUARD/KIDZ ARM RECEIVER W/CLAMP	
1A,2-5	901111	PLASTIC SIDE GUARD KIDS ASSM W/CLAMP	Pair
1B,2-5	901110	PLASTIC SIDE GUARD STD ASSM W/CLAMP	Pair

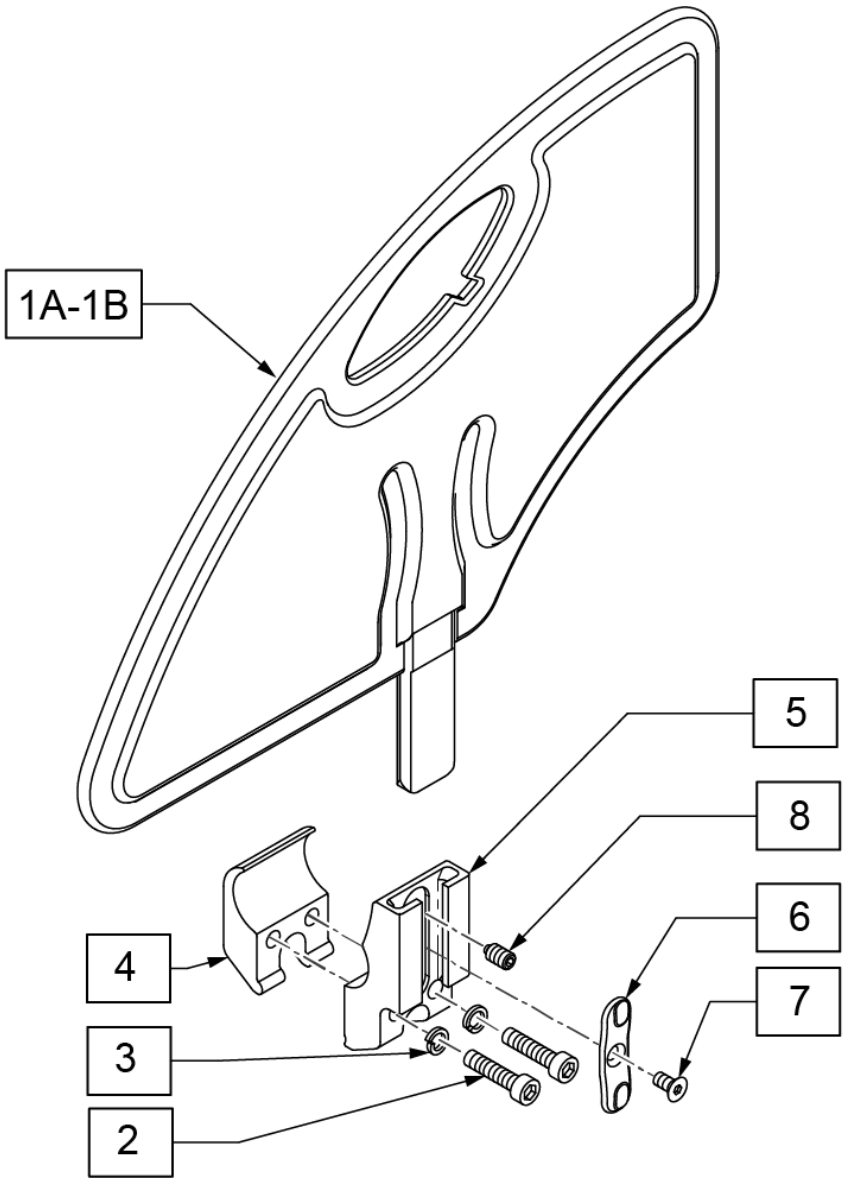

MEASURING GUIDE

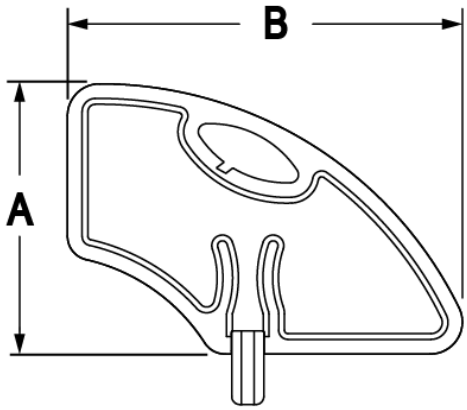

	SMALL	STD
A	6.4"	8.4"
B	11"	12.3"

Pos.	Item Number	Description
1A	104164-001	SIDE GUARD ASSY STD
1B	104164-002	SIDE GUARD ASSY SMALL
2	106961	BHCS 1/4-28 X 1-1/4 ROHS
3	107367	WASHER LOCK HI COLLAR 1/4 ROHS
4	106714	REC SIDE GUARD CLAMP THREADED
6	108780	RECEIVER SG PLASTIC INSERT
7	107135	FHCS #6-32 X 1/4 BLK
8	107136	SETSCREW 1/4-28 X 5/16 OVAL PT
5-8	108781	RECEIVER SIDE GUARD ASSY
2-8	107592	REC SIDE GUARD ASSM W/CLAMP
1A,2-8	107590	SIDE GUARD ASSY W/ CLAMP STD
1B,2-8	107591	SIDE GUARD ASSY W/ CLAMP SMALL

SPOKE GUARDS QUICKIE (Black & Clear)

Note: Not available with 5 Spoke Mag or Xtender wheels. Not available with Projection style handrims.

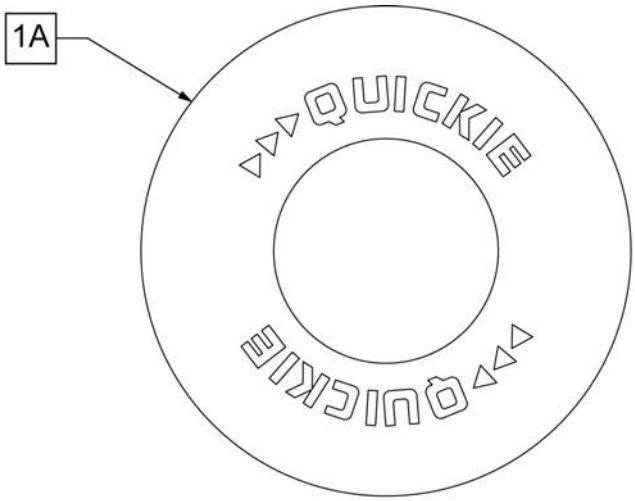

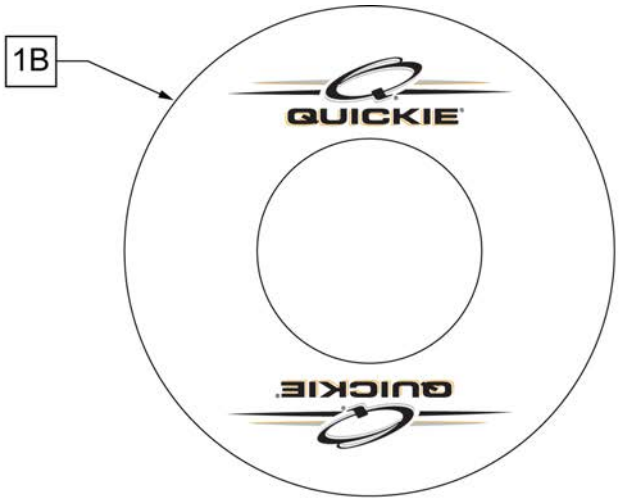

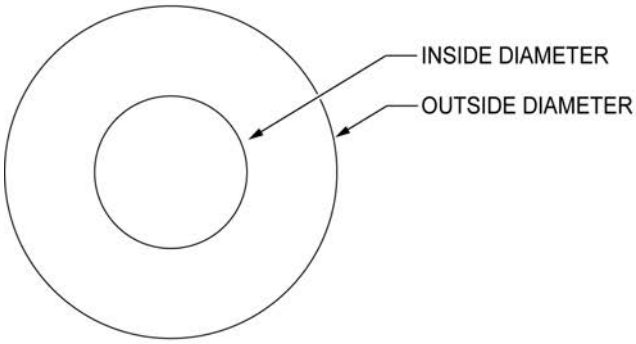

SPOKE GUARD MEASURING GUIDE

PART NUMBER	INSIDE DIAMETER	OUTSIDE DIAMETER
902001	8 1/4	15 7/8
902011	8 1/4	18 1/8
902021	10 1/4	19 5/8
902025	10 1/4	20 3/8
902037	10 1/4	21 7/8
902038	10 1/4	23 3/8
103660-001	8 1/4	16
103660-002	8 1/4	18
103663-001	10 1/4	20 1/2
103663-002	10 1/4	23 1/2
103734-001	10 1/4	19 1/4
103734-002	10 1/4	22
119336	10 1/4	19 1/4

Pos.	Item Number	Description	Remarks
>>>>		BLACK SPOKE GUARDS	
1A	902001	SPK GRDS 20" QUICKIE BLK	PR-Black-fits 20" Whls
1A	902011	SPK GRDS 22" QUICKIE BLK	PR-Black-fits 22" Whls, 24" (540) Whls w/ Proj HR, 24" Mountain Spoke Whls, M6 24" (540) Spoke Whls
1A	902021	SPK GRD 24" QUICKIE SCR MT BLK	PR-Black-fits 24" (540) Mag & Spoke Whls
1A	902025	SPK GRD 24" QUICKIE TAB MT BLK	PR-Black-fits 25" (559) Spk Whls & 26" Mountain Spoke Whls
1A	902037	SPK GRD 26" QUICKIE TAB MT BLK	PR-Black-fits 26" (590) Whls
1A	902038	SPK GRD 26" QUICKIE HT BLK	PR-Black-fits 27" (700) Whls
>>>>		CLEAR SPOKE GUARDS	
1B	103660-001	CLEAR SPOKE GUARD 20"	PR-Clear-fits 20" Whls
1B	103660-002	CLEAR SPOKE GUARD 22"	PR-Clear-fits 22" Whls, 24" (540) Whls w/ Proj HR, 24" Mountain Spoke Whls, M6 24" (540) Spoke Whls

1B	103734-001	SPOKE GUARD 24" CLR	PR-Clear-fits 24" (540) Spoke Whls

TUFFAK TRAY (MANUAL & PEDIATRIC CHAIRS) (02/11/2020)

Note: when adding a Tray to an existing chair with Desk or Full Length Arm Pads, add 1" to current seat width to achieve the best tray size.

Note: Large and X-Large Trays have a round cut-out.

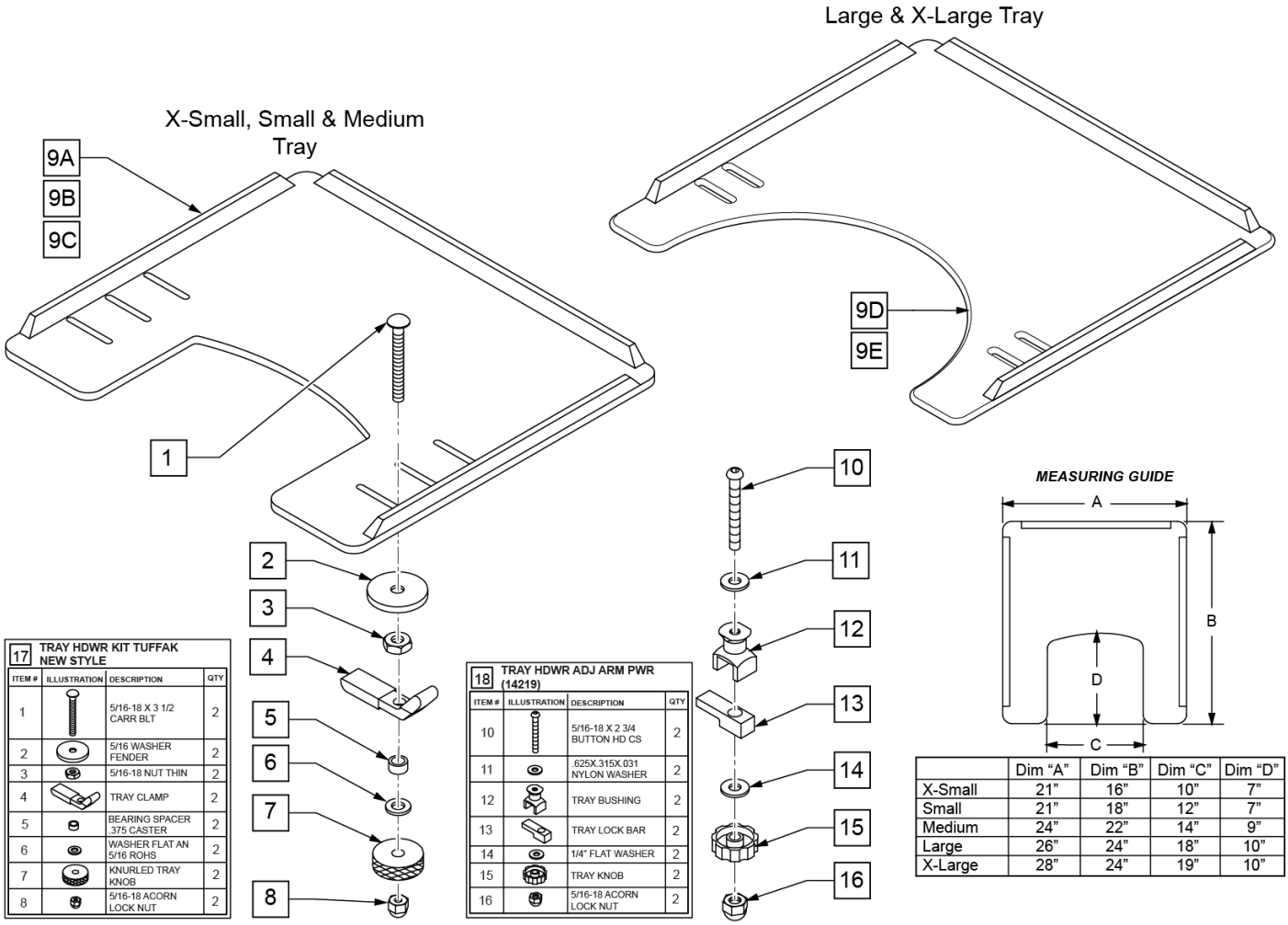

17 TRAY HDWR KIT TUFFAK NEW STYLE			
ITEM #	ILLUSTRATION	DESCRIPTION	QTY
1		5/16-18 X 3 1/2 CARR BLT	2
2		5/16 WASHER FENDER	2
3		5/16-18 NUT THIN	2
4		TRAY CLAMP	2
5		BEARING SPACER .375 CASTER	2
6		WASHER FLAT AN 5/16 ROHS	2
7		KNURLED TRAY KNOB	2
8		5/16-18 ACORN LOCK NUT	2

18 TRAY HDWR ADJ ARM PWR (14219)			
ITEM #	ILLUSTRATION	DESCRIPTION	QTY
10		5/16-18 X 2 3/4 BUTTON HD CS	2
11		.625X.315X.031 NYLON WASHER	2
12		TRAY BUSHING	2
13		TRAY LOCK BAR	2
14		1/4" FLAT WASHER	2
15		TRAY KNOB	2
16		5/16-18 ACORN LOCK NUT	2

	Dim "A"	Dim "B"	Dim "C"	Dim "D"
X-Small	21"	16"	10"	7"
Small	21"	18"	12"	7"
Medium	24"	22"	14"	9"
Large	26"	24"	18"	10"
X-Large	28"	24"	19"	10"

Pos.	Item Number	Description	Remarks
1	226199	5/16-18 x 3 1/2 CARR BOLT	
2	263112	5/16 WASHER FENDER	
3	202110	5/16-18 NUT THIN	
4	550400	TRAY CLAMP	
5	481113	SPACER 5/16 X .380	
6	263100	5/16 AN WASHER FLAT	
7	483026	KNURLED TRAY KNOB	
8	202114	5/16-18 ACORN LOCK NUT	
9A	562619	TRAY TOP EX-SM W/RAIL	
9B	562620	TRAY TOP SM W/RAIL	
9C	562621	TRAY TOP MED W/RAIL	
9D	562622	TRAY TOP LRG W/RAIL	

Pos.	Item Number	Description	Remarks
9E	562623	TRAY TOP X-LRG W/RAIL	
17	881051	TRAY HARDWARE KIT TUFFAK NEW STYLE	Pair
18	881053	TRAY HARDWARE ADJ ARM PWR (14219)	Pair
1-8,9A	902306	TRAY ASSEMBLY EX-SM TUFFAK (10 -12")	Fits 10"-12" wide chairs
1-8,9B	902303	TRAY ASSEMBLY SM TUFFAK (13 -14")	Fits 13"-14" wide chairs
1-8,9C	902304	TRAY ASSEMBLY MED TUFFAK (15 -17")	Fits 15"-17" wide chairs
1-8,9D	902305	TRAY ASSEMBLY LRG TUFFAK (18 -20")	Fits 18"-20" wide chairs
1-8,9E	902309	TRAY ASSEMBLY X-LRG TUFFAK (21 -22")	Fits 21"-22" wide chairs
9A,10-16	902330	TRAY ASSM X-SM TFK 10-12/CAM	Fits 10"-12" wide chairs
9B,10-16	902331	TRAY ASSM SM TUFFAK 13-14/CAM	Fits 13"-14" wide chairs
9C,10-16	902332	TRAY ASSM MED TUFFAK 15-17/CAM	Fits 15"-17" wide chairs
9D,10-16	902333	TRAY ASSM LRG TUFFAK 18-20/CAM	Fits 18"-20" wide chairs

PADDED STOMACH CUTOUT (06/2011)

Note: Pad cannot be added to an existing tray as snaps must be installed at the factory to function correctly.

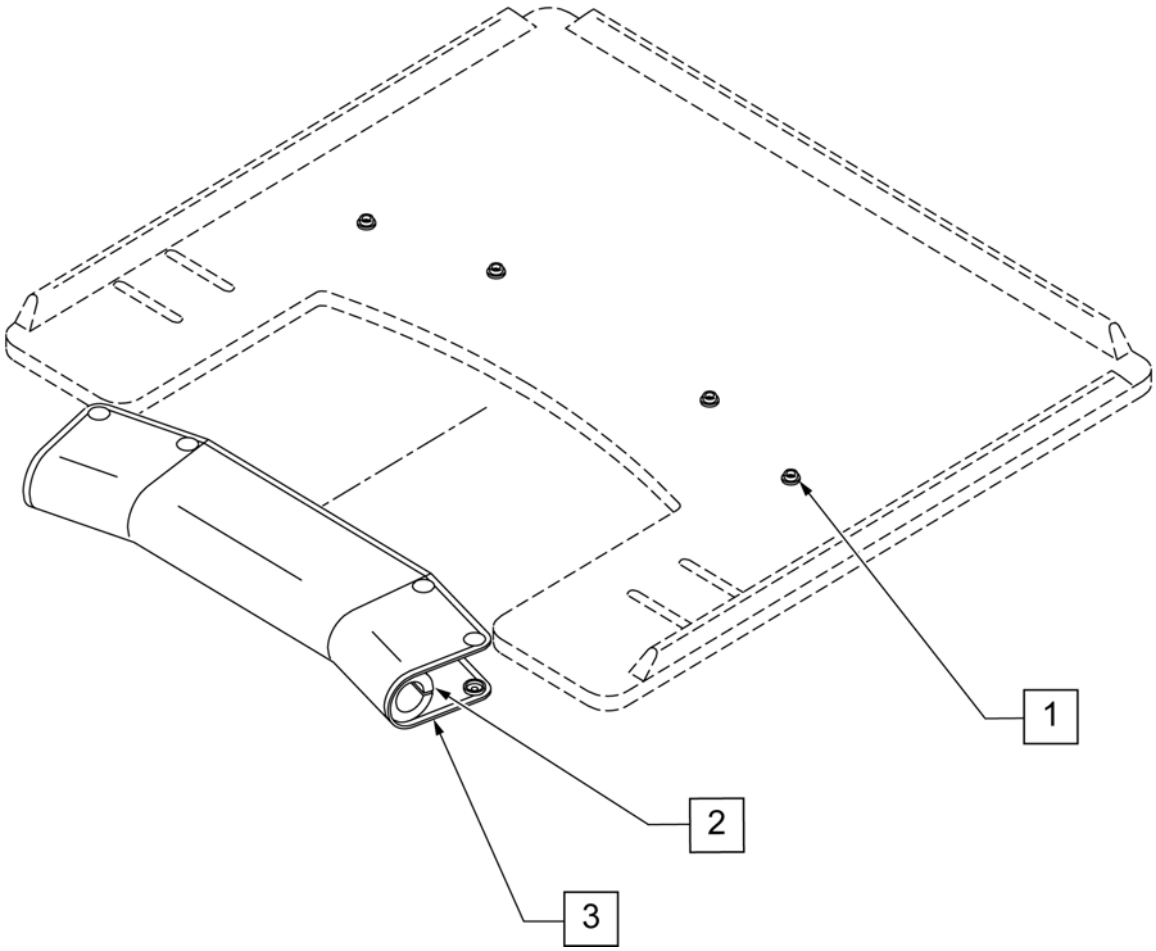

Pos.	Item Number	Description	Remarks
1-3	9PS	PADDED STOMACH CUT OUT	(SPECIFY COLOR)

PROTRACTOR PAD

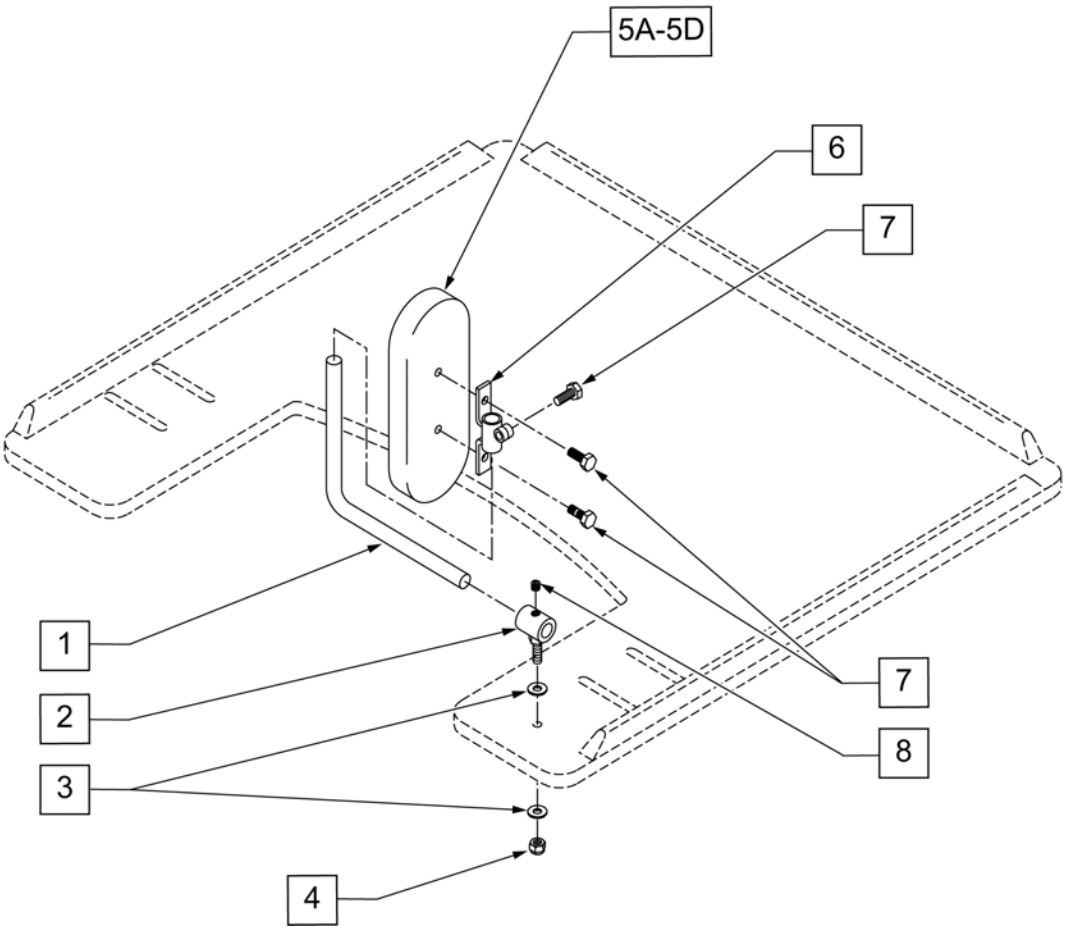

Pos.	Item Number	Description	Remarks
1	450752	HEADREST ADJUSTMENT BAR	
2	450751	HEADREST PAD BUSHING	
3	2702	#10 SAE FLAT WASHER	
4	106932	1/4 -20 NYLOCK NUT HIGH	
5A	15022	4X6 RECTANGULAR PAD	
5B	15013	5 x 7 OVAL PAD	
5C	755020	4 x 5 OVAL PAD	
5D	15018	4 x 6 OVAL PAD	
6	450750	HEADREST PAD BRACKET	
7	221105-QU	1/4-20 x 3/4" HEX C/S	
8	2270	5/16-18 x 1/4" SOC SET SCREW	
1-4,5A,6-8	14980A	TRAY PROTRACTION ASSM-4X6 RECT	PAIR
1-4,5B,6-8	14980B	TRAY PROTRACTION ASSM-5X7 OVAL	PAIR
1-4,5C,6-8	14980D	TRAY PROTRACTION ASSM-4X5 OVAL	PAIR
1-4,5D,6-8	14980E	TRAY PROTRACTION ASSM-4X6 OVAL	PAIR

HINGED OVERLAY NON-REMOVABLE

(01/2017)

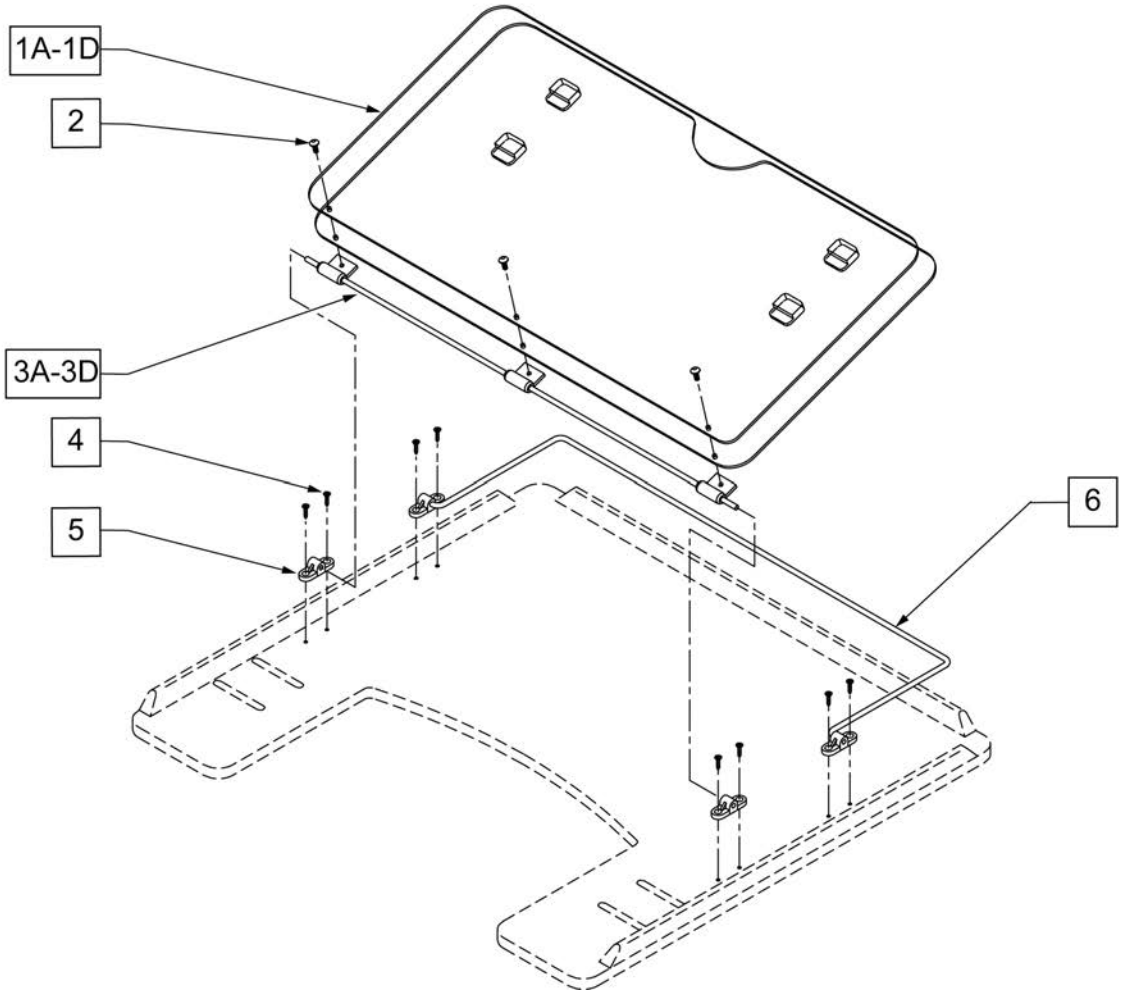

Pos.	Item Number	Description
1A,2	17916	9-1 STYLE 3 OVERLAY ONLY
1B,2	17917	9-2 STYLE 3 OVERLAY ONLY
1C,2	17918	9-5 STYLE 3 OVERLAY ONLY
1D,2	17939	9-6 STYLE 3 OVERLAY ONLY
2	226017	10-32 x 3/8 BH C/S BLK
3A	17922	9-1 HINGED OVERLAY PIVOT BAR
3B	17923	9-2 HINGED OVERLAY PIVOT BAR
3C	17924	9-5 HINGED OVERLAY PIVOT BAR
3D	17929	9-6 HINGED OVERLAY PIVOT BAR
4	2266	#6 x 1/2" FL DH PHL SCREW
5	4061	TRAY OVERLAY MOUNTING BRACKET
6A	17925	TRAY OVERLAY ROD
6B	17926	9-2 OVERLAY ROD
6C	17927	9-5 OVERLAY ROD
6D	17928	9-6 TRAY OVERLAY ROD
1A,2,3A,4,5,6A	17919	9-1 STYLE 3 OVERLAY ASSM
1B,2,3B,4,5,6B	17920	9-2 STYLE 3 OVERLAY ASSM
1C,2,3C,4,5,6C	17921	9-5 STYLE 3 OVERLAY ASSM
1D,2,3D,4,5,6D	17902	9-6 STYLE 3 OVERLAY ASSY

HINGED OVERLAY REMOVABLE

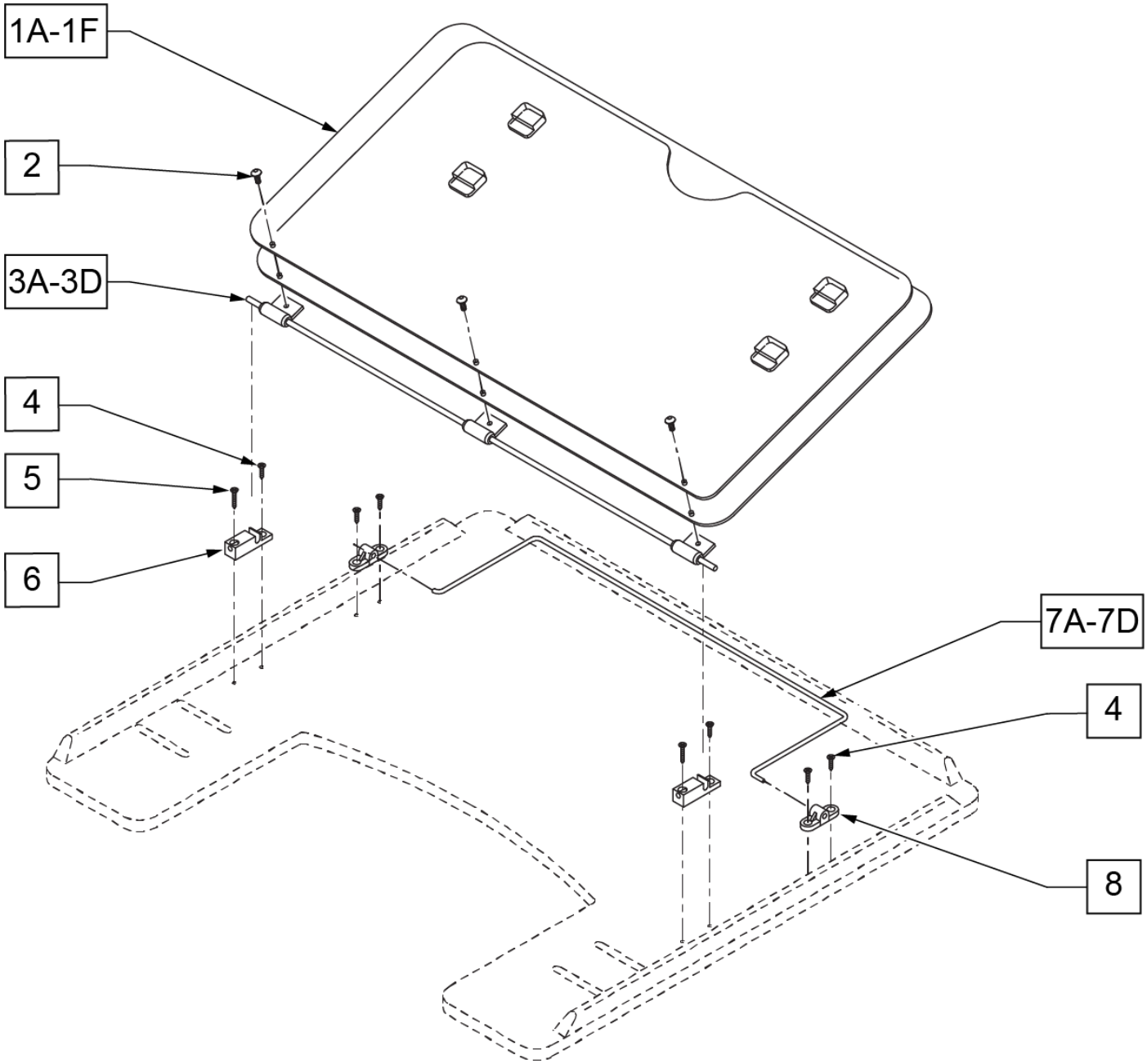

Pos.	Item Number	Description
1A	17935	9-1 STYLE 2 OVERLAY
1B	17936	9-2 STYLE 2 OVERLAY
1C	17937	9-5 STYLE 2 OVERLAY
1D	17938	9-6 STYLE 2 OVERLAY
1E	17930	STYLE #1 LEARNING BOARD
1F	17931	STYLE #1 FULL LEARNING BOARD
1A,2	17916	9-1 STYLE 3 OVERLAY ONLY
1B,2	17917	9-2 STYLE 3 OVERLAY ONLY
1C,2	17918	9-5 STYLE 3 OVERLAY ONLY
1D,2	17939	9-6 STYLE 3 OVERLAY ONLY
2	226017	10-32 x 3/8 BH C/S BLK

Pos.	Item Number	Description
3A	17922	9-1 HINGED OVERLAY PIVOT BAR
3B	17923	9-2 HINGED OVERLAY PIVOT BAR
3C	17924	9-5 HINGED OVERLAY PIVOT BAR
3D	17929	9-6 HINGED OVERLAY PIVOT BAR
4	2266	#6 x 1/2" FL DH PHL SCREW
5	230047	#6 x 3/4" FH PHIL S/M SCREW
6	14232	TRAY OVERLAY - QUICK RELEASE
7A	17925	TRAY OVERLAY ROD
7B	17926	9-2 OVERLAY ROD
7C	17927	9-5 OVERLAY ROD
7D	17928	9-6 TRAY OVERLAY ROD
8	4061	TRAY OVERLAY MOUNTING BRACKET
1A,2,3A,4-6,7A,8	17903	9-1 STYLE 3A OVERLAY ASSEMBLY
1B,2,3B,4-6,7B,8	17904	9-2 STYLE 3A OVERLAY ASSEMBLY
1,2,3C,4-6,7C,8	17905	9-5 STYLE 3A OVERLAY ASSEMBLY
1,2,3D,4-6,7D,8	17906	9-6 STYLE 3A OVERLAY ASSEMBLY

TRAY RIBS TUFFAK

NOTE: ONE 19" RIB AND TWO 15 1/2" RIBS FIT THE EXTRA-SMALL, SMALL, 9-0 AND 9-1 TRAY TABLES. ONE 21" RIB AND TWO 19" RIBS FIT THE MEDIUM AND 9-2 TRAY TABLES. ONE 23 1/2" RIB AND TWO 21" RIBS FIT THE LARGE, 9-2, 9-5, AND 9-6 TRAY TABLES.

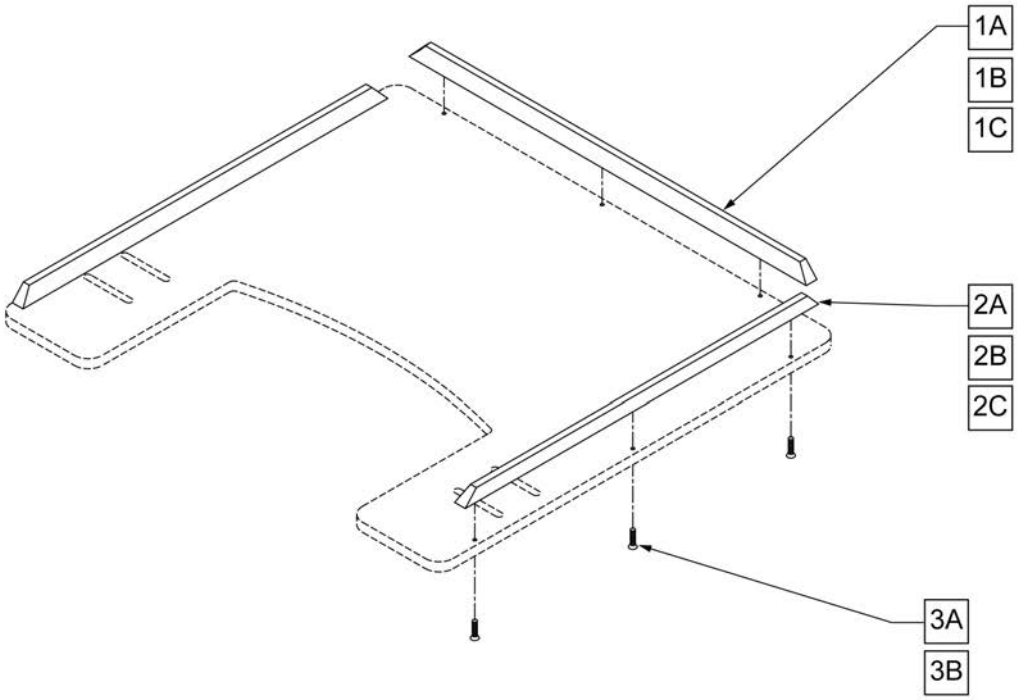

Pos.	Item Number	Description	Pos.	Item Number	Description
1A	9004	19" WOOD TRAY RIBS	2A	9004	19" WOOD TRAY RIBS
1A	9005	21" WOOD TRAY RIBS	2A	9005	21" WOOD TRAY RIBS
1A	9006-QU	23 1/2" WOOD TRAY RIBS	2B	9007-QU	15 1/2" HEAVY DUTY RIB FOR WOOD TRAY
1B	9010	19" HEAVY DUTY RIB FOR WOOD TRAY	2B	9010	19" HEAVY DUTY RIB FOR WOOD TRAY
1B	9013	21" HEAVY DUTY RIB FOR WOOD TRAY	2B	9013	21" HEAVY DUTY RIB FOR WOOD TRAY
1B	9016	23 1/2" HEAVY DUTY RIB FOR WOOD TRAY	2C	9008-QU	15 1/2" HEAVY DUTY RIB FOR 3/8" TUFFAK
1C	9011-QU	19" HEAVY DUTY RIB FOR 3/8" TUFFAK	2C	9011-QU	19" HEAVY DUTY RIB FOR 3/8" TUFFAK
1C	9014	21" HEAVY DUTY RIB FOR 3/8" TUFFAK	2C	9014	21" HEAVY DUTY RIB FOR 3/8" TUFFAK
1C	9017	23 1/2" HEAVY DUTY RIB FOR 3/8" TUFFAK	3A	2268	#6 x 5/8" OVAL PHILLIPS SCREW
2A	9003	15 1/2" WOOD TRAY RIBS	3B	230047	#6 x 3/4" FH PHIL S/M SCREW

VENT TRAY LTV & TRILOGY

[02/19/2020]

Note: order qty 1each of desired vent tray type, correct width vent strut kit and clamp kit.

Note: see MONO VENT TRAY LTV parts page for Vent Tray replacement or to retrofit the tray to a chair with a Mono Back.

Note: Mounting the Trilogy EVO vent requires the use of a wheelchair mounting kit (Philips Respironics P/N 1134633) which can be purchased directly from Philips Respironics.

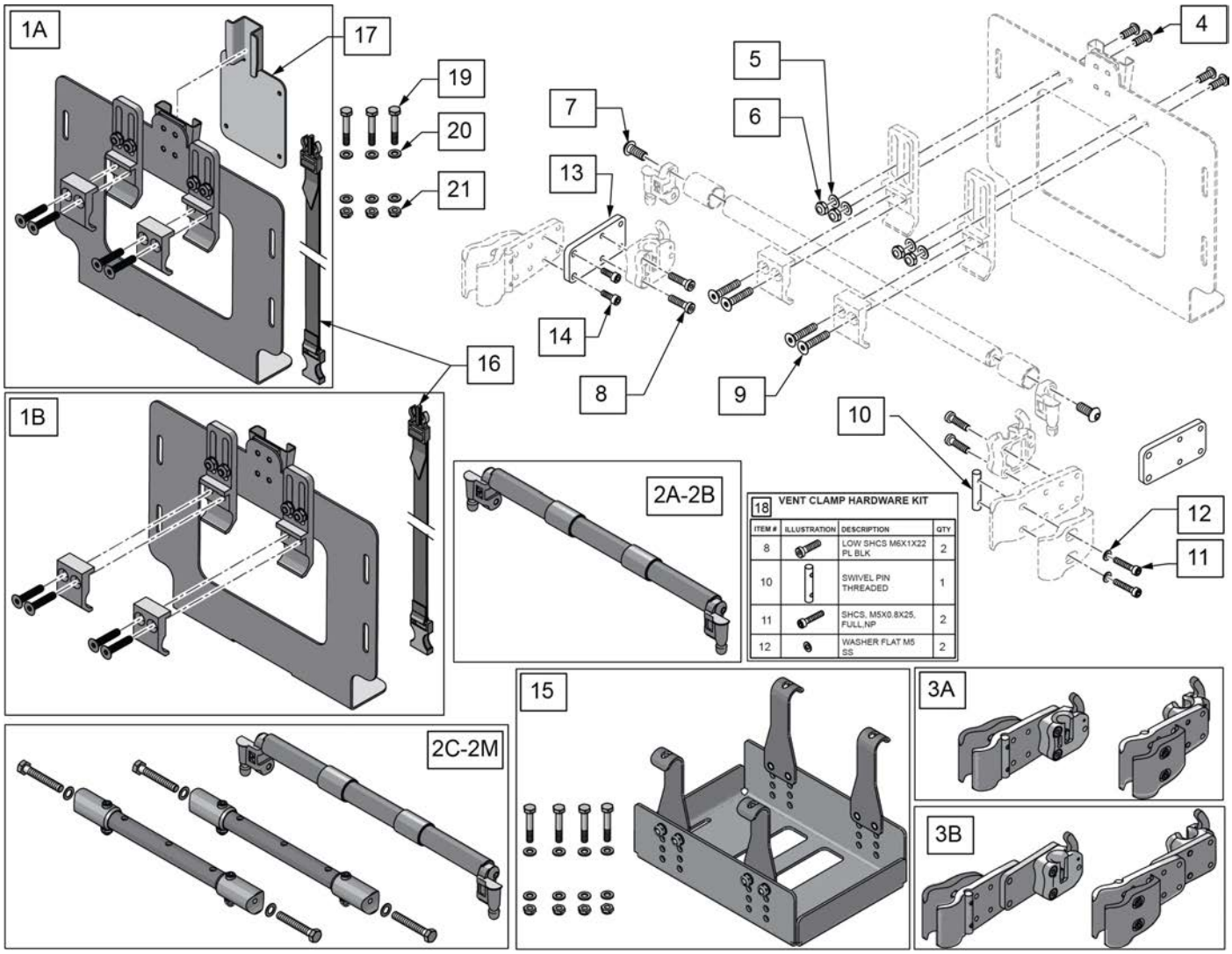

Pos.	Item Number	Description	Remarks
1A,16,17	129609	TRILOGY MOUNT KIT	
1B,16	129611	LTV MOUNT KIT	
2A	129612	VENT STRU KIT 10	For Zippie IRIS only
2B	129613	VENT STRU KIT 11	For Zippie IRIS only
2C	129614	VENT STRU KIT 12	For Zippie IRIS only

Pos.	Item Number	Description	Remarks
2D	129615	VENT STRU KIT 13	For Zippie IRIS only
2E	129616	VENT STRU KIT 14	
2F	129617	VENT STRU KIT 15	Kit includes 2 vent battery tray struts and 1 vent tray back strut
2G	129618	VENT STRU KIT 16	Kit includes 2 vent battery tray struts and 1 vent tray back strut
2H	129619	VENT STRU KIT 17	Kit includes 2 vent battery tray struts and 1 vent tray back strut
2I	129620	VENT STRU KIT 18	Kit includes 2 vent battery tray struts and 1 vent tray back strut
2J	129621	VENT STRU KIT 19	For Quickie IRIS only
2K	129622	VENT STRU KIT 20	For Quickie IRIS only
2L	129623	VENT STRU KIT 21	For Quickie IRIS only
2M	129624	VENT STRU KIT 22	For Quickie IRIS only
3A	129625	CLAMP STANDARD	
3B	129626	CLAMP EXTENDED	
4	106959	BHCS 1/4-28 X 5/8	
5	106944	WASHER FLAT THIN AN 1/4 ROHS	
6	106935	NUT NYLOCK THIN 1/4-28	
7	106979	BHCS 5/16-18 X 3/4	
9	BOLT010	1/4-20X1-1/4" FHSCS	
11	102260-002	SHCS M5X0.8X25 FULL NP	
13,14	129627	EXTENSION KIT	
14	114497	SHCS, M5X0.8X14, FULL PL	
15	129628	BATTERY TRAY STD	For Quickie IRIS
15	129629	BATTERY TRAY PED	For Zippie IRIS
16	125584	STRAP ASSEMBLY KIT	
17	127211	TRILOGY MOUNT ADAPTER	
18	129610	VENT CLAMP HARDWARE KIT	
19	013923	HHCS M8 X 1.25 X 25 W PTCH	3 Required
20	011691	WASHER HIGH STRENGTH 8MM	6 Required
21	210085	NUT HEX NYLOCK	3 Required

VENT & BATTERY TRAY

[05/11/2018]

NOTE: NEW AXLE PLATES ARE REQUIRED IF ADDING A VENT & BATTERY TRAY.

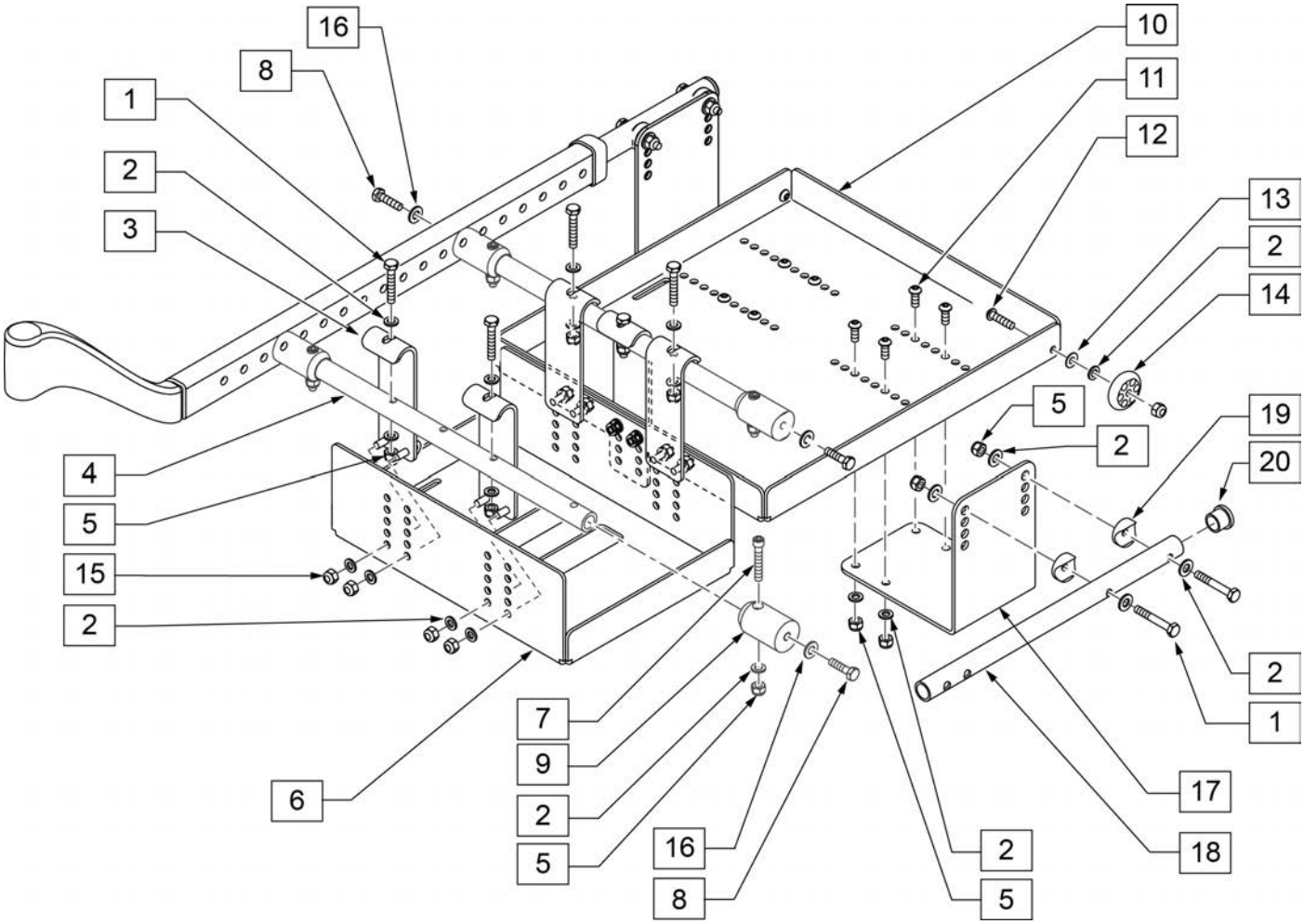

Pos.	Item Number	Description	Remarks
1	106971	HHCS 1/4 -28 x 1 3/8 ROHS	
2	106943	WASHER FLAT AN 1/4 ROHS	
3	505969	HOOK BATTERY TRAY	
4	522923	TUBE STRUT VENT & BATTERY TRAY 16	16" wide
4	522924	TUBE STRUT VENT & BATTERY TRAY 17	17" wide
4	522925	TUBE STRUT VENT & BATTERY TRAY 18	18" wide
4	522926	TUBE STRUT VENT & BATTERY TRAY 19	19" wide
4	522927	TUBE STRUT VENT & BATTERY TRAY 20	20" wide
4	522928	TUBE STRUT VENT & BATTERY TRAY 21	21" wide
4	522929	TUBE STRUT VENT & BATTERY TRAY 22	22" wide
5	106934	NUT NYLOCK 1/4 -28 ROHS	
6	540359	BATTERY TRAY GRP 24	
7	106975	SHCS 1/4 -28 x 1 1/4 ROHS	
8	106985	HHCS 5/16 -24 x 2 ROHS	
9	105880	MOUNT STRUT VENT & BATTERY TRAY	
10	505823	VENTILATOR TRAY	
11	106959	BHCS 1/4 -28 x 5/8" ROHS	

Pos.	Item Number	Description	Remarks
12	106960	BHCS 1/4 -28 x 7/8" ROHS	
13	262130	6MM WASHER WAVE	
14	561032	ANTI-TIP WHEEL	
15	106932	NUT NYLOCK 1/4 -28 ROHS	
16	263100	WASHER FLAT AN 5/16" ROHS	
17	105887	BRACKET VENT TRAY	
18	105885	TUBE EXTENSION VENT & BATTERY TRAY	
19	561055	3/4 SADDLE 1 OD	
20	561000-QU	3/4" INSERT PLUG .083	
1-20	108284	VENT BATTERY TRAY ASSM 16 WIDE	16" wide
1-20	108285	VENT BATTERY TRAY ASSM 17 WIDE	17" wide
1-20	108286	VENT BATTERY TRAY ASSM 18 WIDE	18" wide
1-20	108287	VENT BATTERY TRAY ASSM 19 WIDE	19" wide
1-20	108288	VENT BATTERY TRAY ASSM 20 WIDE	20" wide
1-20	108289	VENT BATTERY TRAY ASSM 21 WIDE	21" wide
1-20	108290	VENT BATTERY TRAY ASSM 22 WIDE	22" wide
2,4,5,7-9,16	108579	VENT STRUT ASSM 16 W	16" wide
2,4,5,7-9,16	108580	VENT STRUT ASSM 17 W	17" wide
2,4,5,7-9,16	108581	VENT STRUT ASSM 18 W	18" wide
2,4,5,7-9,16	108582	VENT STRUT ASSM 19 W	19" wide
2,4,5,7-9,16	108583	VENT STRUT ASSM 20 W	20" wide
2,4,5,7-9,16	108584	VENT STRUT ASSM 21 W	21" wide
2,4,5,7-9,16	108585	VENT STRUT ASSM 22 W	22" wide

QUICKIE CADDY

[09/2011]

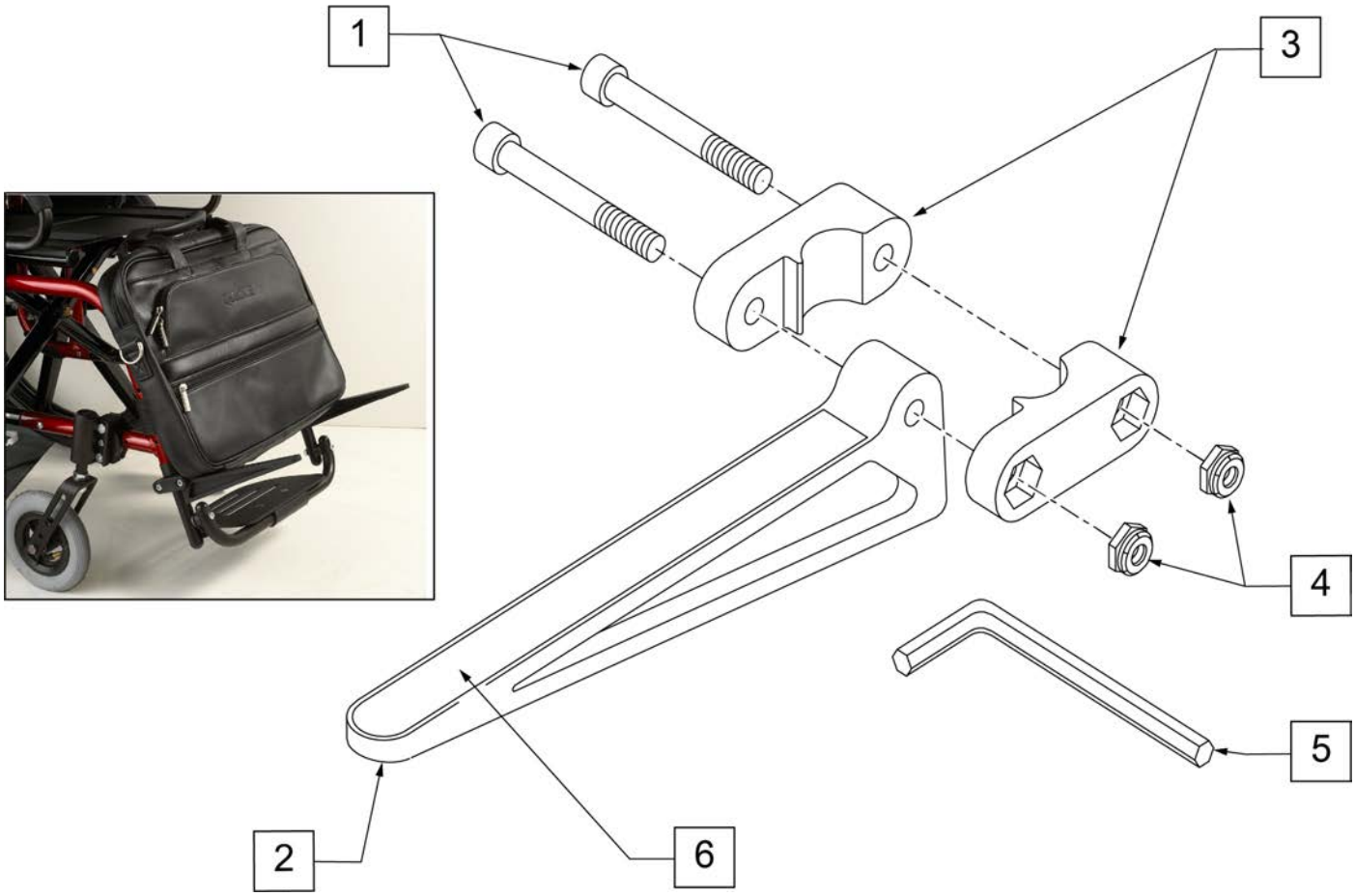

Pos.	Item Number	Description	Remarks
1	106975	1/4-28 x 1 1/4 SOC C/S	
2	561105	CADDY ARM	Clamps on to Extension Tube (3/4" round and D2); Caddy Arm length is 7 1/2"
3	561104	CADDY CLAMP	Clamps on to Extension Tube (3/4" round and D2)
4	106935	1/4-28 NYLOCK NUT THIN	
5	349998	3/16" ALLEN WRENCH	
6	580050	CADDY TAPE	
1-6	902350	QUICKIE CADDY (PR)	

JAY LOWER EXTREMITY S/A SUPPORT

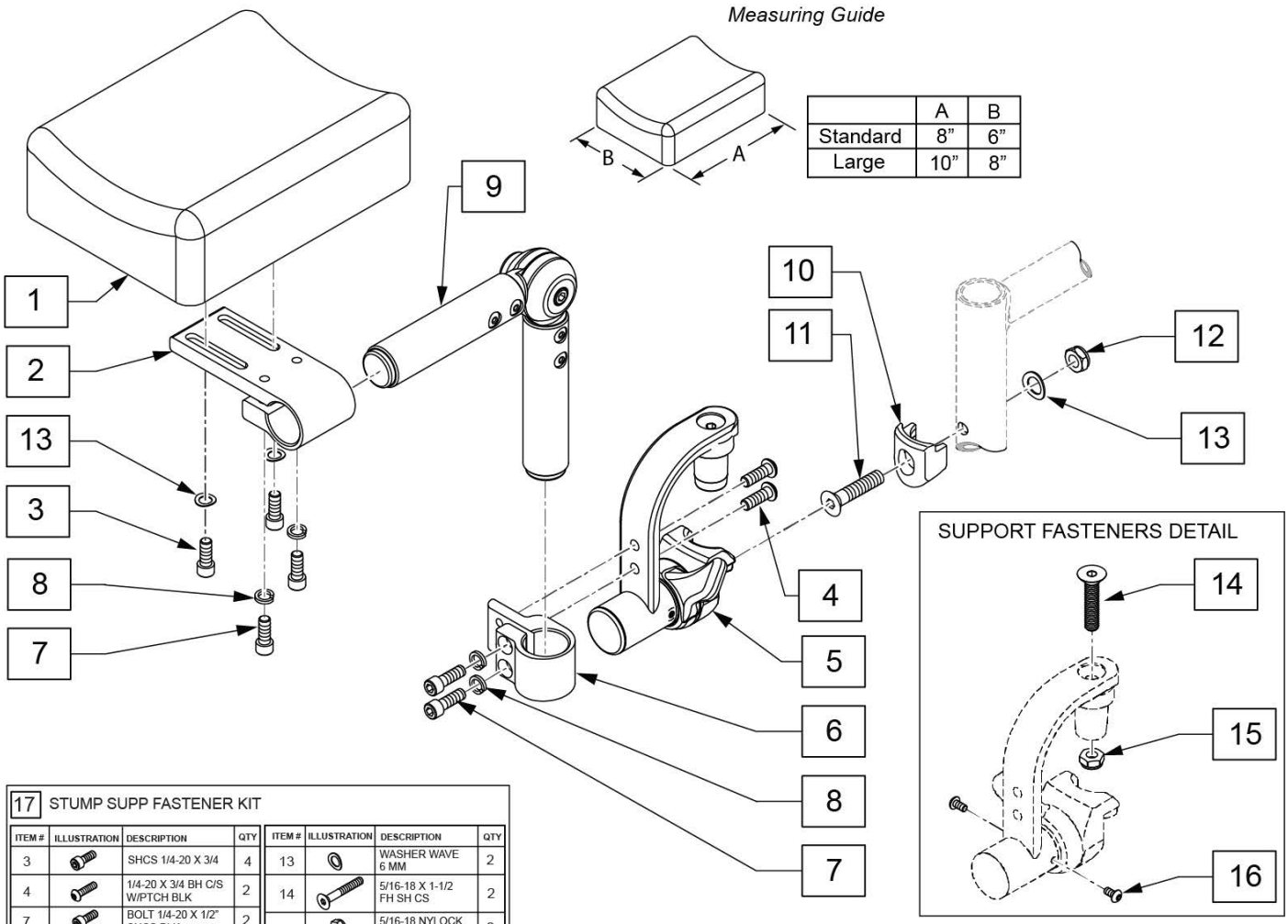

	A	B
Standard	8”	6”
Large	10”	8”

17 STUMP SUPP FASTENER KIT

ITEM #	ILLUSTRATION	DESCRIPTION	QTY
3		SHCS 1/4-20 X 3/4	4
4		1/4-20 X 3/4 BH C/S W/PTCH BLK	2
7		BOLT 1/4-20 X 1/2” SHCS BLK	2
8		WASHER LOCK HI COLLAR 1/4	4
13		WASHER WAVE 6 MM	2
14		5/16-18 X 1-1/2 FH SH CS	2
15		5/16-18 NYLOCK NUT THIN	2
16		BHCS, M4X.7X8, FULL, NP	2

Pos.	Item Number	Description	Remarks
1,3,13	161563	PAD W/FASTENERS STD	Single Pad, 6X8
1,3,13	161564	PAD W/FASTENERS LRG	Single Pad, 8X10
1-9,13	161565	STUMP SUPP RETRO LRG PAD RH	Single Pad, 8X10
1-9,13	161566	STUMP SUPP RETRO LRG PAD LH	Single Pad, 8X10
1-9,13	161567	STUMP SUPP RETRO STD PAD RH	6X8
1-9,13	161568	STUMP SUPP RETRO STD PAD LH	6X8
2-9,13	162051	STUMP SUPPORT W/O PAD RH	No Pad
2-9,13	162052	STUMP SUPPORT W/O PAD LH	No Pad
10-13	119514	LATCH RECEIVER KIT	for 1 side
17	161569	STUMP SUPP FASTENER KIT	for 1 side

IMPACT GUARD NEOPRENE & GEL VELCRO PADS

(09/2009)

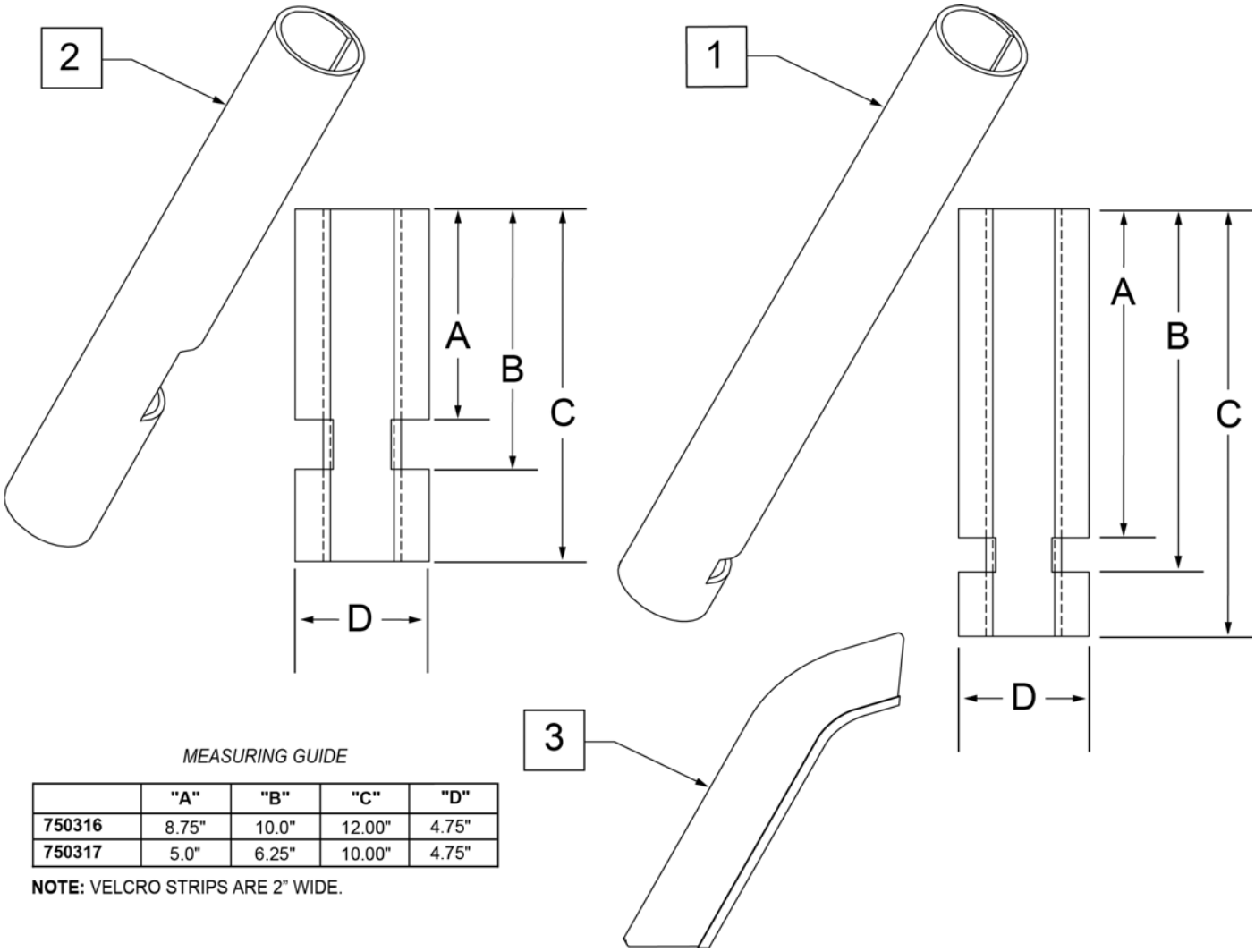

MEASURING GUIDE

	"A"	"B"	"C"	"D"
750316	8.75"	10.0"	12.00"	4.75"
750317	5.0"	6.25"	10.00"	4.75"

NOTE: VELCRO STRIPS ARE 2" WIDE.

Pos.	Item Number	Description	Remarks
1	750316	IMPACT GUARDS NEOPRENE FIXED (PR)	PAIR-Fixed Front Frame
2	750317	IMPACT GUARDS NEOPRENE S/A	PAIR-S/A Footrest & Q7
3	109231	GEL VELCRO PAD HANGER/FRAME	PAIR- fits S/A & Fixed Front Frame
4	108315	GEL PAD SA ARM	Single, fits Padded SA Armrest

CANOPY

Note: New Canopy design cut over date 12/20/21. Chairs prior to 12/20/21 Canopy is not compatible and must be replace with complete assembly.

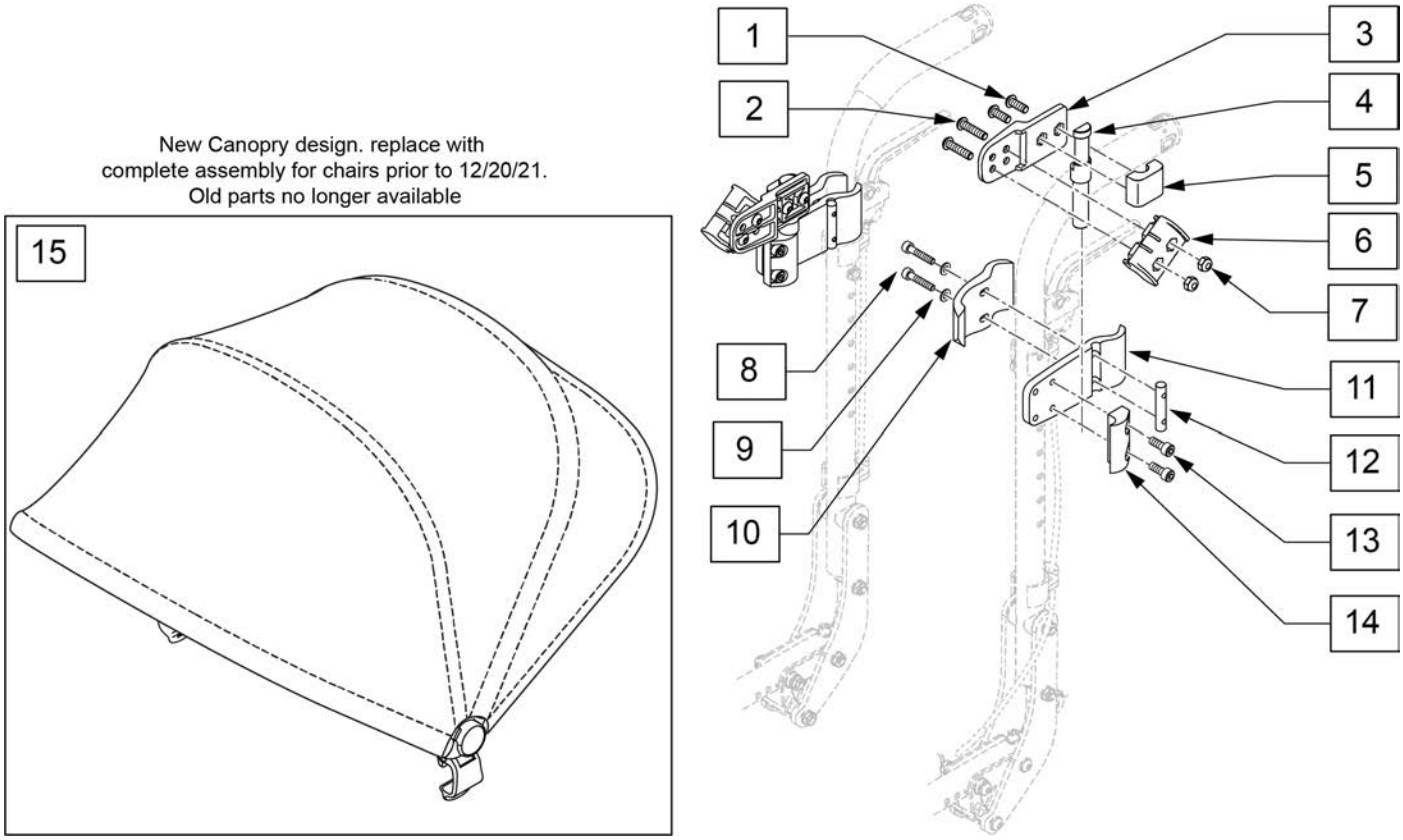

Pos.	Item Number	Description	Remarks
1-14	125761	CNPY MNT ASSM, IRIS/ZP IRIS,PR	Pair
15	126053	CANOPY IRIS/ZP IRIS & X'CAPE	Canopy w/ internal frame only
1-15	125320	CNPY KIT ASSM,IRIS/ZP IRIS,BLK	Complete retro kit

ANGLE ADJ IV POLE

[10/2010]

NOTE: THE ANGLE ADJUSTABLE IV POLE IS NOT COMPATABLE WITH THE TRANSIT OPTION.

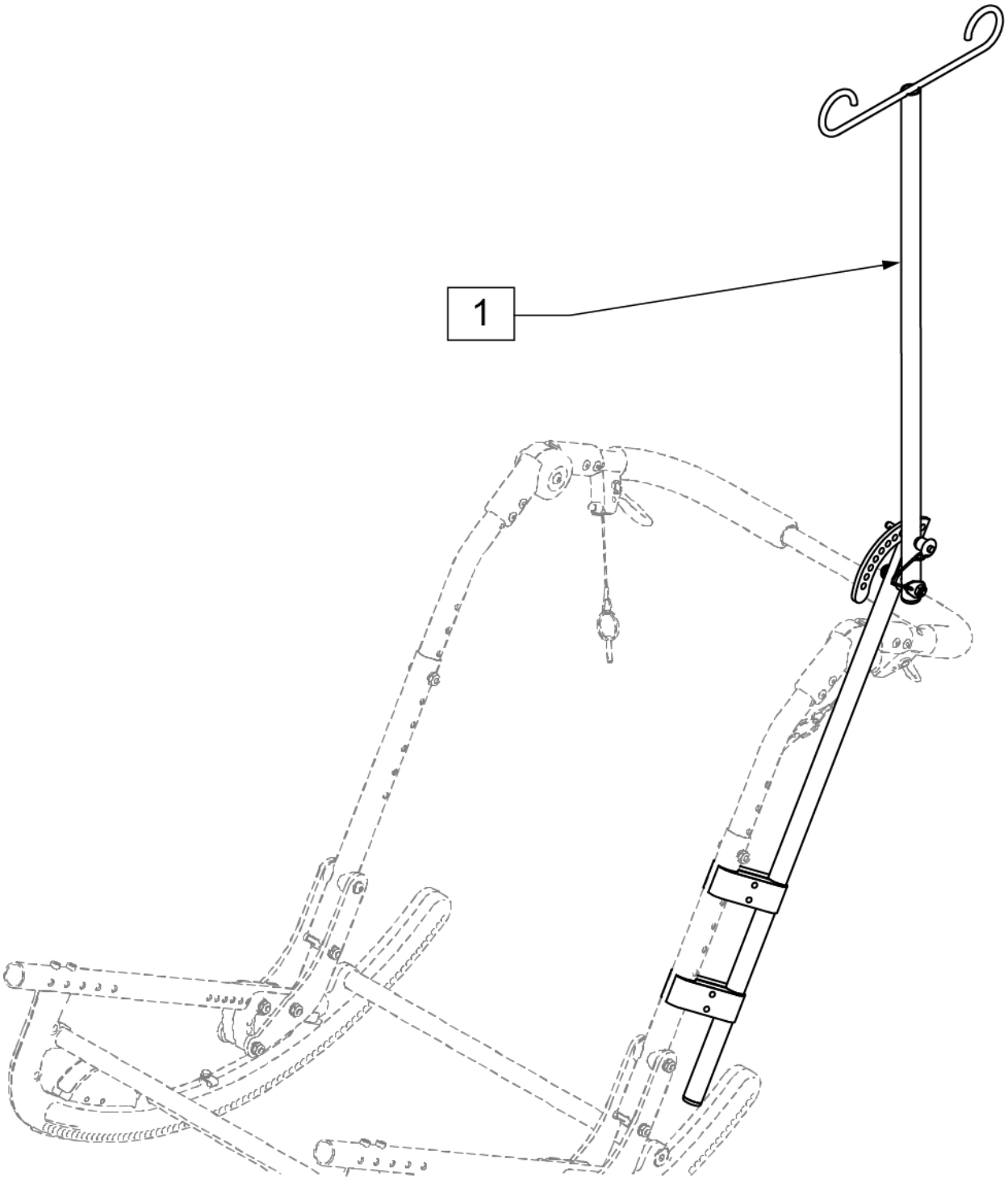

Pos.	Item Number	Description
1	884140	ANGLE ADJUSTABLE IV POLE

OXYGEN TANK HOLDER

NOTE: AVAILABLE WITH STANDARD BACKREST ONLY AND WILL NOT BE COMPATIBLE WITH CHAIRS THAT ARE EQUIPPED WITH S/A HEIGHT ADJ STROLLER HANDLES, TRANSIT OPTION, JAY 3 BACK OR RECLINING BACKREST. ACCOMMODATES SIZE D & E OXYGEN TANKS.

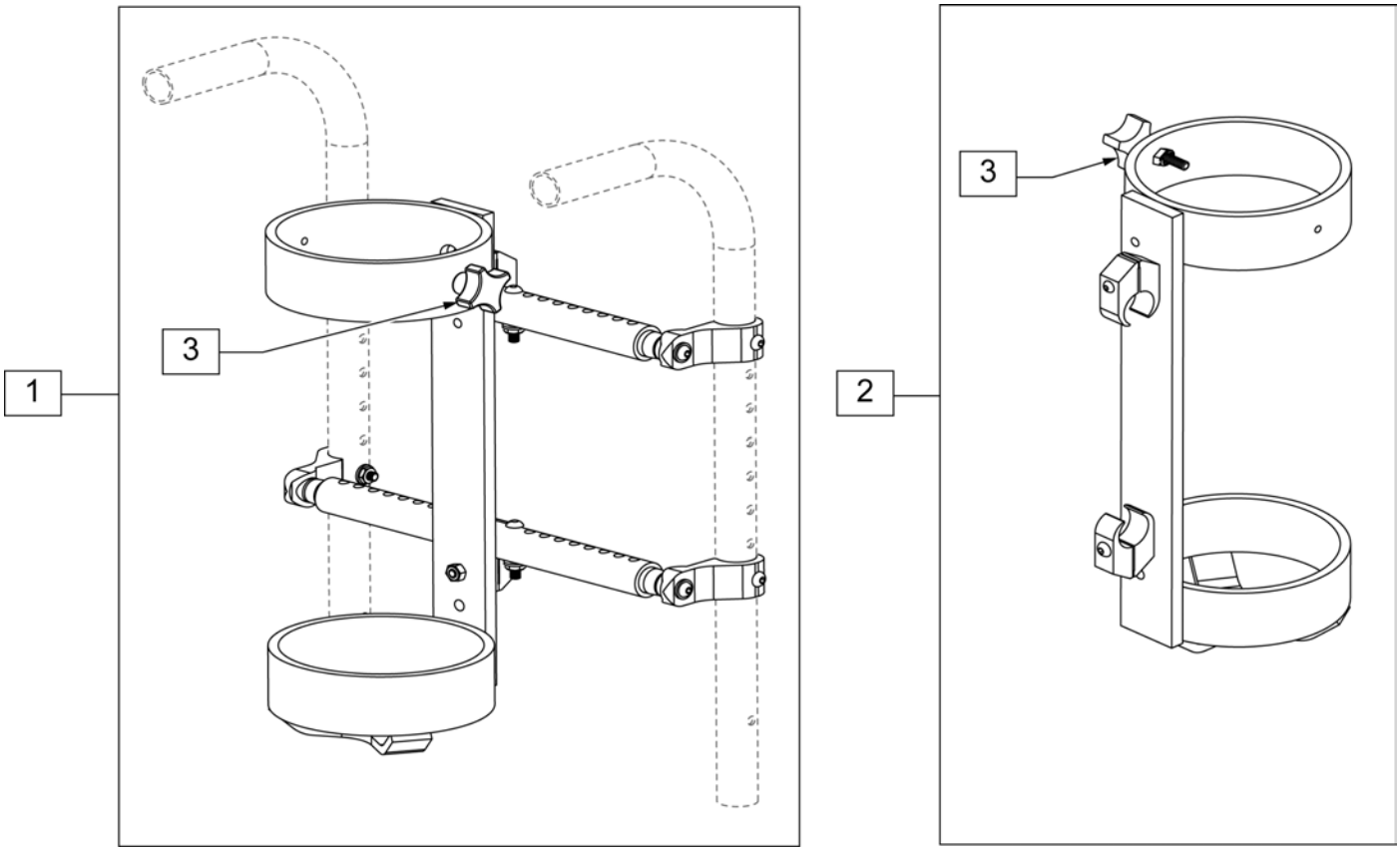

Pos.	Item Number	Description	Remarks
1	884136	O2 HOLDER W/ BACKREST MOUNT 14" - 22" WIDE	ACCOMMODATES SIZE D & E OXYGEN TANKS
2	884135	O2 HOLDER W/ 1" CLAMPS	ACCOMMODATES SIZE D & E OXYGEN TANKS
3	343080	FOUR-PRONG KNOB STUD 1/4 -20	

ONE-ARM DRIVE (S/N Preifx IRS or IRSE only) [11/2009]

NOTE: REFER TO REAR WHEEL SECTION FOR REPLACEMENT MAG WHEELS.

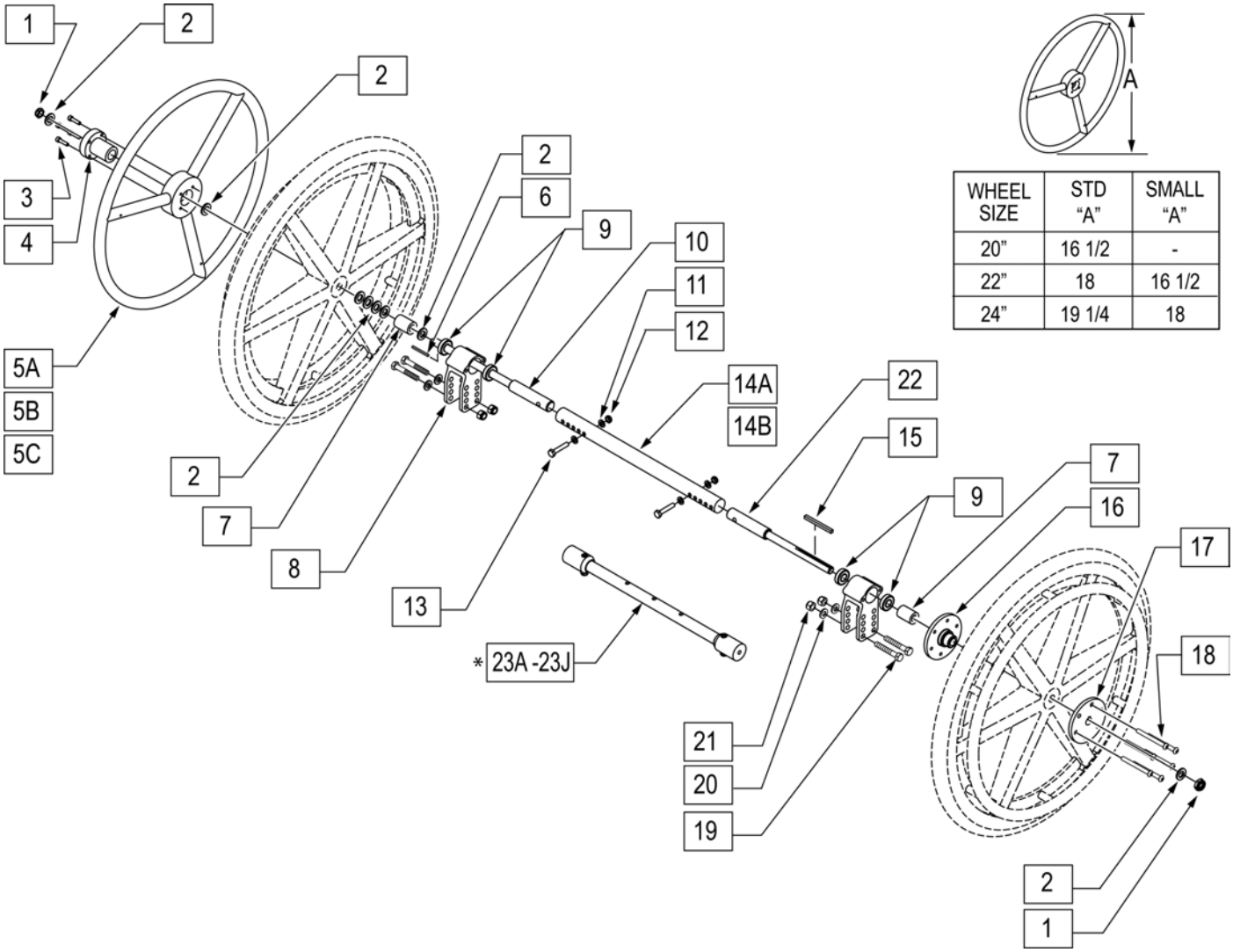

WHEEL SIZE	STD "A"	SMALL "A"
20"	16 1/2	-
22"	18	16 1/2
24"	19 1/4	18

Pos.	Item Number	Description	Pos.	Item Number	Description
1	106940	NUT NYLOCK THIN 1/2 -20 ROHS	12	106935	NUT NYLOCK THIN 1/4 -28 ROHS
2	106949	WASHER FLAT AN 1/2 ROHS	13	106971	HHCS 1/4 -28 x 1 3/8 ROHS
3	106956	SHCS 10 -32 x 3/4 ROHS	14A	105856-001	TUBE STRUT 1 AD 14 -18"
4	106691	HAND RING HUB	14B	105856-002	TUBE STRUT 1 AD 18 -22"
5A	529800	1AD HANDRIM ONLY 22" STD/24" SM	15	341277	3/16" SQ x 2 3/8 KEY STL
5B	529801	1AD HANDRIM ONLY 20" STD/22" SM	16	500631	WHEEL HUB 1 ARM DRIVE W/ TAP
5C	529802	1AD HANDRIM ONLY 24" STD	17	500630	1 AD WHEEL HUB W/O TAP
6	341274	3/16 SQ x 1 1/2 KEY STL	18	106967	BHCS 1/4 -28 x 2 1/2 SHLDR ROHS
7	483320	WHEEL SPACER CGTS	19	106985	HHCS 5/16 -24 x 2 ROHS
8	105855	AXLE PLATE 1 AD	20	106946	WASHER FLAT AN 5/16 ROHS
9	349500	1 1/8 x 1/2 BEARING	21	106938	NUT NYLOCK 5/16 -24 ROHS
8,9	108576	AXLE PLATE ASSM 1AD	22	050534-001	SHAFT DRIVE HANDRIM 1AD
10	050534-002	SHAFT DRIVE WHEEL 1AD	23A	115976	VENT STRUT ASSM 14" W
11	106943	WASHER FLAT AN 1/4 ROHS	23B	115977	VENT STRUT ASSM 15" W

Pos.	Item Number	Description	Pos.	Item Number	Description
23C	108579	VENT STRUT ASSM 16" W	1-5B, 6 -23B	115988	1AD RTRO 20/22 KIT IRIS 15W
23D	108580	VENT STRUT ASSM 17" W	1-5B, 6 -23C	115989	1AD RTRO 20/22 KIT IRIS 16W
23E	108581	VENT STRUT ASSM 18" W	1-5B, 6 -23D	115990	1AD RTRO 20/22 KIT IRIS 17W
23F	108582	VENT STRUT ASSM 19" W	1-5B, 6 -23E	115991	1AD RTRO 20/22 KIT IRIS 18W
23G	108583	VENT STRUT ASSM 20" W	1-5B, 6 -23F	115992	1AD RTRO 20/22 KIT IRIS 19W
23H	108584	VENT STRUT ASSM 21" W	1-5B, 6 -23G	115993	1AD RTRO 20/22 KIT IRIS 20W
23J	108585	VENT STRUT ASSM 22" W	1-5B, 6 -23H	115994	1AD RTRO 20/22 KIT IRIS 21W
1-5A, 6 -23A	115978	1AD RTRO 22/24 KIT IRIS 14W	1-5B, 6 -23J	115995	1AD RTRO 20/22 KIT IRIS 22W
1-5A, 6 -23B	115979	1AD RTRO 22/24 KIT IRIS 15W	1-5C, 6 -23A	115996	1AD RTRO 24 KIT IRIS 14W
1-5A, 6 -23C	115980	1AD RTRO 22/24 KIT IRIS 16W	1-5C, 6 -23B	115997	1AD RTRO 24 KIT IRIS 15W
1-5A, 6 -23D	115981	1AD RTRO 22/24 KIT IRIS 17W	1-5C, 6 -23C	115998	1AD RTRO 24 KIT IRIS 16W
1-5A, 6 -23E	115982	1AD RTRO 22/24 KIT IRIS 18W	1-5C, 6 -23D	115999	1AD RTRO 24 KIT IRIS 17W
1-5A, 6 -23F	115983	1AD RTRO 22/24 KIT IRIS 19W	1-5C, 6 -23E	116000	1AD RTRO 24 KIT IRIS 18W
1-5A, 6 -23G	115984	1AD RTRO 22/24 KIT IRIS 20W	1-5C, 6 -23F	116001	1AD RTRO 24 KIT IRIS 19W
1-5A, 6 -23H	115985	1AD RTRO 22/24 KIT IRIS 21W	1-5C, 6 -23G	116002	1AD RTRO 24 KIT IRIS 20W
1-5A, 6 -23J	115986	1AD RTRO 22/24 KIT IRIS 22W	1-5C, 6 -23H	116003	1AD RTRO 24 KIT IRIS 21W
1-5B, 6 -23A	115987	1AD RTRO 20/22 KIT IRIS 14W	1-5C, 6 -23J	116004	1AD RTRO 24 KIT IRIS 22W

TIRE PUMP

(03/2011)

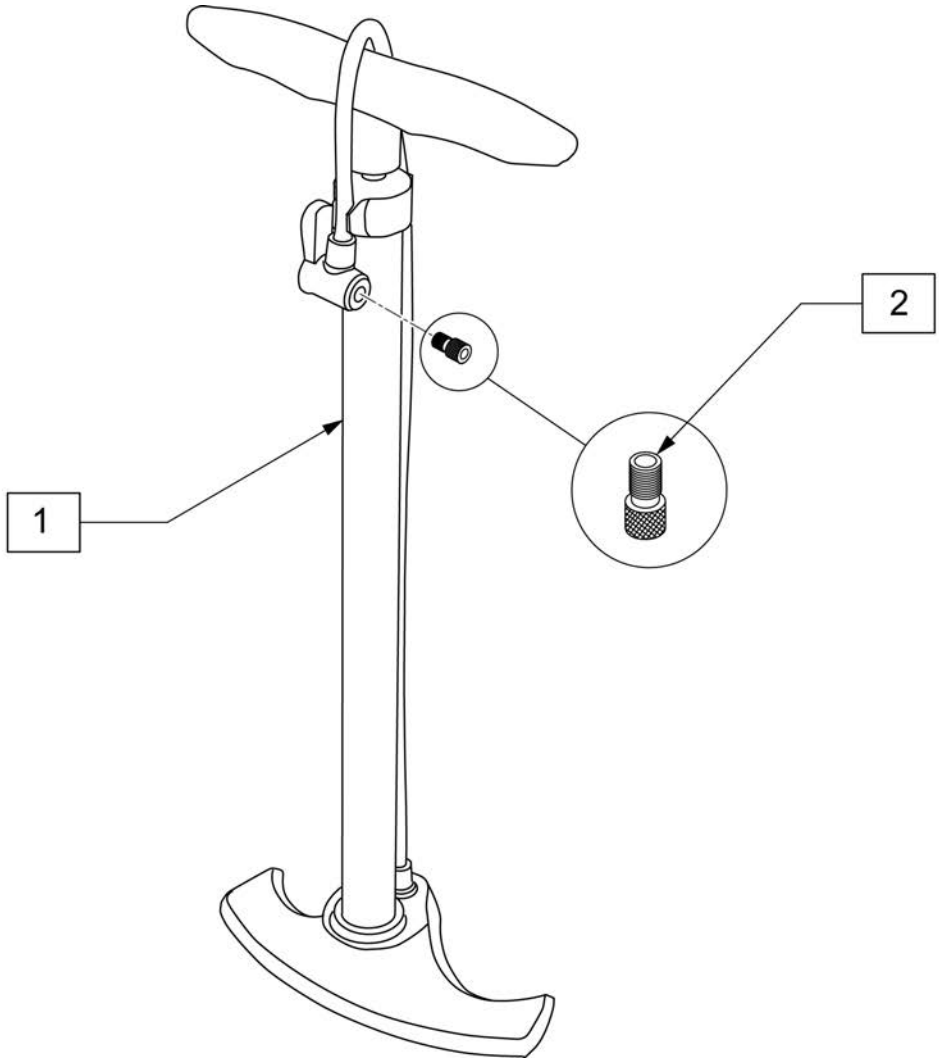

Pos.	Item Number	Description
1	389050	TIRE PUMP
2	381230	VALVE ADAPTER PRESTA

UTILITY HOOK

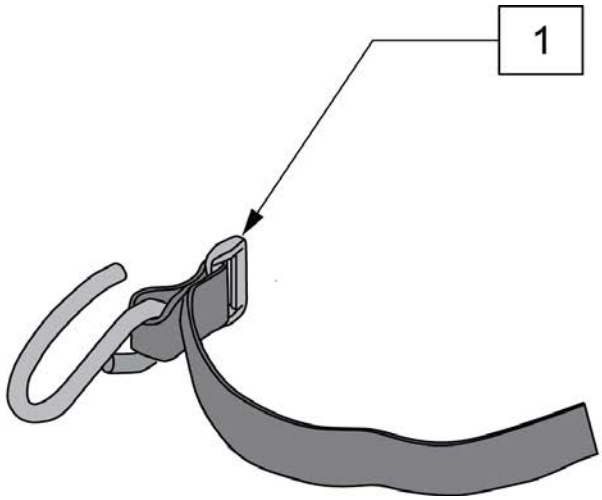

Pos.	Item Number	Description
1	125912	UTILITY HOOK

WATER BOTTLE AND CAGE

(01/01/2020)

Note: Water Bottle Cage clamp fits 3/4" to 1 1/2" round tubing, 7R/Q7 and Xenon oval tubing as well as Double "D" tubing; Max bottle diameter is 3 3/4".

Note: Use rubbing alcohol to clean area of frame where adhesive rubber strip (item 3) is to be located prior to instalation to insure best adhesion.

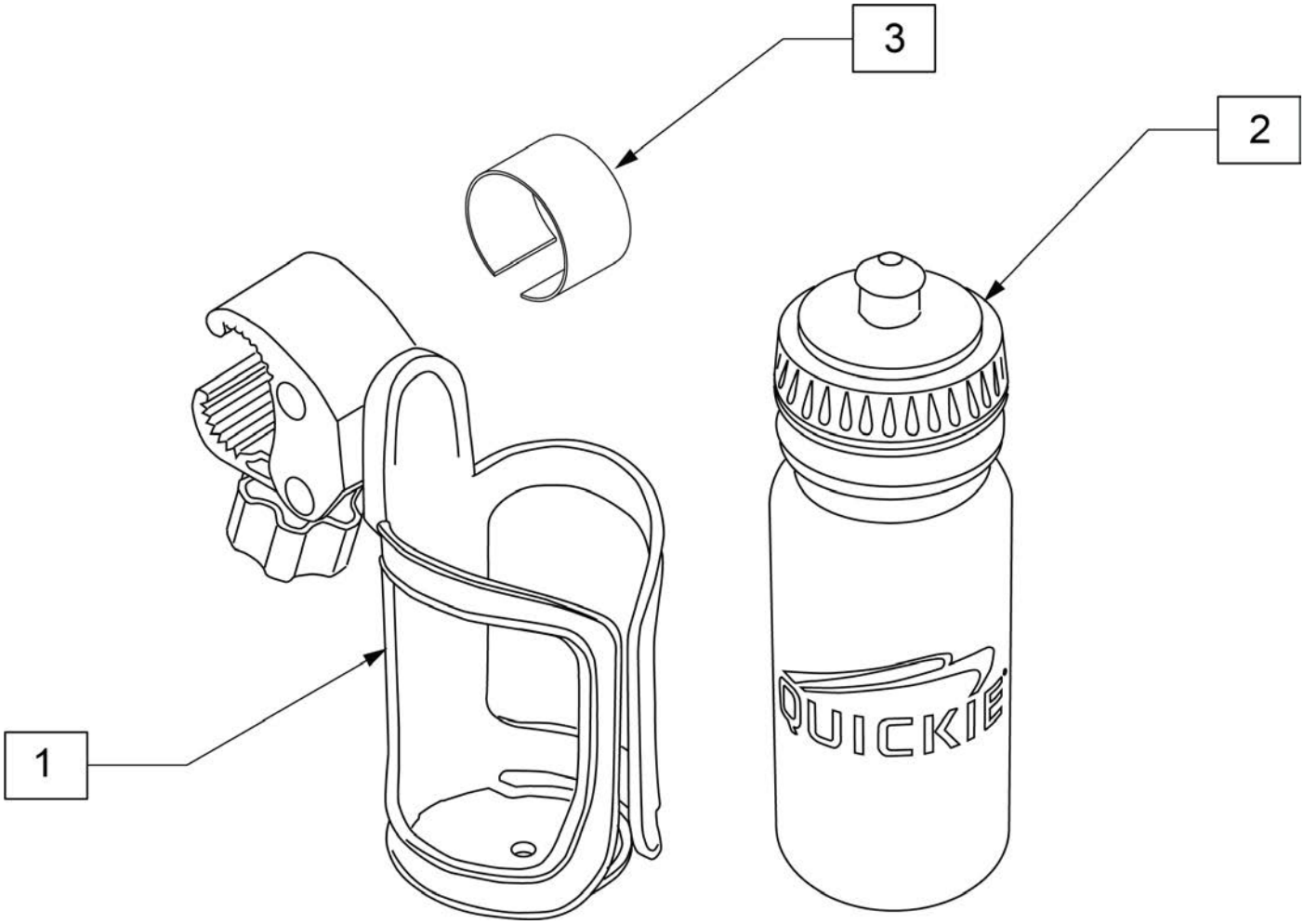

Pos.	Item Number	Description	Remarks
1	252135	WATER BOTTLE CAGE W/ CLAMP	Black
2	252136	QUICKIE WATER BOTTLE	Black
3	123526	ADHESIVE RUBBER PAD	
1-3	163680	WATER BOTTLE W/ CAGE AND CLAMP	