Seating system

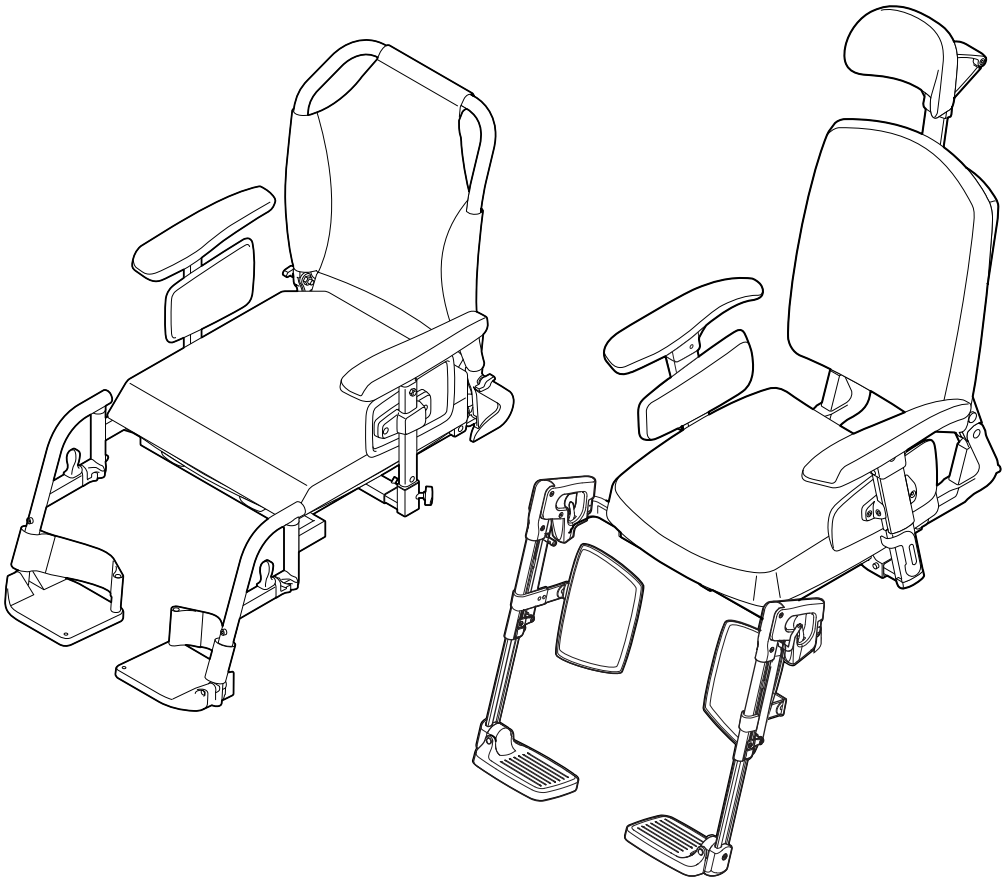

TECHNICAL MANUAL EN

Sedeo Lite / Pro

SEDEO

© 2022 Sunrise Medical

All rights reserved.

The information provided herein may not be reproduced and/or published in any form, by print, photoprint, microfilm or any other means whatsoever (electronically or mechanically) without the prior written authorization of Sunrise Medical.

The information provided is based on general data concerning the construction known at the time of the publication of this manual. Sunrise Medical executes a policy of continuous improvement and reserves the right to changes and modifications.

The information provided is valid for the product in its standard version. Sunrise Medical can therefore not be held liable for any damage resulting from specifications of the product deviating from the standard configuration. Illustrations contained in the manual may deviate from the configuration of your product.

The information made available has been prepared with all possible diligence, but Sunrise Medical cannot be held liable for any errors contained in the information or the consequences thereof.

Sunrise Medical accepts no liability for loss resulting from work executed by third parties.

Names, trade names, trademarks etc. used by Sunrise Medical may not, as per the legislation concerning the protection of trade names, be considered as being available.

Table of content

1 Introduction 6
1.1 This manual 6
1.2 Identification of the product 6
1.3 Symbols used in this manual 7

2 Safety 8
2.1 Personnel qualification 8
2.2 Cautions and warning statements 8
2.3 Used decals on the seating system 9

3 Tools, parts and components 10
3.1 Tools 10

4 Spare parts 11
4.1 Use of the parts lists 11
4.2 Sedeo Lite 12
1 Sedeo Lite / Seat frame 13
2 Sedeo Lite / Seat cushion 14
3 Sedeo Lite / Backrest frame 15
4 Sedeo Lite / Backrest cushion 16
5 Sedeo Lite / Standard legrest 17
6 Sedeo Lite / Manually elevating legrest 18
7 Sedeo Lite / Removable armrest 19
8 Sedeo Lite / Headrest 20
9 Sedeo Lite / Joystick bracket 21
10 Sedeo Lite / Lighting 22
11 Sedeo Lite / Positioning belt 23
4.3 Sedeo Pro 24
12 Sedeo Pro / Seat frame 25
13 Sedeo Pro / Push bar 27
14 Sedeo Pro / Seat cushion 28
15 Sedeo Pro / Backrest 31
16 Sedeo Pro / Backrest flexible 33
17 Sedeo Original / Mounting bracket for legrest 35
18 Mounting bracket for heavy duty legrest 36
19 Standard legrest (for Sedeo Original standard legrest see section 39) 37
20 Manually elevating legrest (for Sedeo Original manually elevating legrest see section 40) 38
21 Electrically elevating legrest (for Sedeo Original electrically elevating legrest see section 41) 39
22 Standard heavy duty legrest 40
23 Comfort heavy duty legrest 41
24 Sedeo Pro / Central legrest 42
25 Sedeo Pro / Manually elevating central legrest 43
27 Sedeo Pro / Removable armrest 45
28 Sedeo Pro / Flip up armrest 46
29 Sedeo Pro / Headrest 47
30 Sedeo Pro / Joystick bracket 48
31 Sedeo Pro / Lighting on flip up armrest 49
32 Sedeo Pro / Lighting on seat frame 50
33 Sedeo Pro / Abduction support 51
34 Sedeo Pro / Hemiplegia armrest - Side cushions wegde shaped - Mirror - Armrest bag 52
35 Sedeo Pro / Positioning belt - Cane holder - Thigh support 53
36 Sedeo Pro / Worktops manual wheelchair 54
37 Sedeo Pro / Worktops power wheelchair 55
38 Sedeo Pro / Third party backrest 56
39 Sedeo Original / Standard legrest (End of Life parts) 57

40 Sedeo Original / Manually elevating legrest (End of Life parts) 59
41 Sedeo Original / Electrically elevating legrest (End of Life parts) 61

5 Service instructions 63
5.1 Maintenance plan / Reimbursement plan 63
5.2 Assembling, replacement and adjustment instructions Sedeo Lite 64
5.2.1 Replacing the backrest frames 64
5.2.2 Adjusting or mounting the seat cushion fixation set 68
5.2.3 Mounting the standard or swing-away remote holder 69
5.2.4 Mounting the lights 70
5.2.5 Mounting the positioning belt 72
5.3 Assembly, replacement and adjustment instructions Sedeo Pro 73
5.3.1 General instruction: Removing drop out protection parts 73
5.3.2 General instruction: The use of the clamp nut 74
5.3.3 Replacing the angle adjustable/reclining backrests 75
5.3.4 Mounting the push bars 80
5.3.5 Adjusting or mounting the seat cushion fixation set 83
5.3.6 Mounting the backrest cushion fixation set 84
5.3.7 Mounting the thoracic supports 85
5.3.11 Mounting the (manually elevating) central legrest 94
5.3.12 Mounting the electrically elevating central legrest 96
5.3.13 Replacing the actuators of the electrically elevating central legrest 98
5.3.14 Replacing the flip up armrest hinge 100
5.3.15 Mounting the standard or swing-away remote holder 102
5.3.16 Mounting the lighting on flip-up armrest 104
5.3.17 Mounting the abduction support 105
5.3.18 Mounting the hemiplegia armrest 107
5.3.19 Mounting the mirror 108
5.3.20 Mounting the positioning belt 110
5.3.21 Mounting the cane holder 111

6 Trouble shooting 113

7 Specifications 114
7.1 CE declaration of conformity 114
7.2 Technical information Sedeo Lite 114
7.3 Technical information Sedeo Pro 115

8 Warranty 117
8.1 Definitions of terms 117
8.2 Warranty period table 117

1 Introduction

1.1 This manual

This manual contains the instructions for repairs and general maintenance of the Sedeo seating system (Sedeo Lite/Pro).
Mechanics who do repairs on this seating system must be well trained and familiar with the repair methods and the maintenance of the seating system.
Always make sure that the work is carried out safely, particularly with respect to procedures requiring the seating system to be lifted up.
We advise that you contact our service department before doing repair work on a seating system that has been involved in an accident.
The following specifications are important when ordering parts:

- Model
- Year of manufacture
- Identification number
- Part number
- Name of the part concerned

This information is provided on the identification plate. See 'Identification of the product'.

Available documentation
The following technical documentation is available / required to service this seating system:

- User manual
- Service manual

Service and technical support
For information concerning specific settings, maintenance or repair works please contact your supplier. He is always prepared to help you.
Ensure you have at hand:

- Model
- Year of manufacture
- Identification number

This information is provided on the identification plate. See 'Identification of the product'.

1.2 Identification of the product

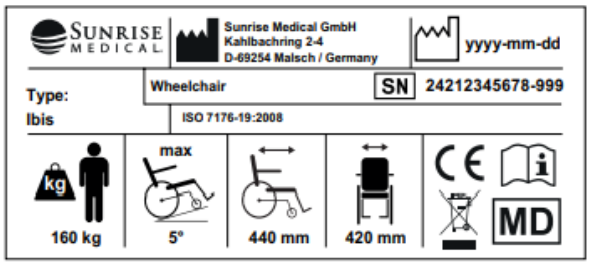

Ibis	Product Name/SKU Number
max X°	Maximum safe slope with anti-tip tubes fitted, Depends on wheelchair setting, posture and physical capabilities of the user.
XXX mm	Seat width
XXX mm	Seat depth
XXX kg	Load Maximum
CE	CE Mark
	User's Guide
XXXX-XX-XX	Date of manufacture
SN	Serial number
MD	This symbol means Medical Device
	Manufacturer's address
ISO 7176-19:2008	Crash tested according to ISO 7176-19:2008

1.3 Symbols used in this manual

Warning symbol

Follow the instructions next to this symbol closely.
Not paying careful attention to these instructions could result in physical injury or damage to the seating system or the environment.

Reference symbol

The symbol refers to a separate user manual. This reference will indicate the specific user manual and the section to which is being referred.

2 Safety

2.1 Personnel qualification

Service technicians:
Repairs may only be carried out by trained and authorised service technicians.
During the execution of their work, they are at all times fully responsible for the fulfilment of locally applicable safety guidelines and standards.
Temporary employees and persons in training may only carry out repair and replacement work under the supervision of an authorised service technician.

2.2 Cautions and warning statements

⚠ **Safety**
Safety information is indicated with the warning symbol.

- Follow the instructions carefully next to these warning symbols! Not paying careful attention to these instructions could result in physical injury or damage to the seating system or the environment. Where ever possible, safety information is provided in the relevant chapter.

⚠ **Temperature**
- Avoid physical contact with the seating system's motors at all times. Motors are continuously in motion during use and can reach high temperatures. After use, the motors will cool down slowly. Physical contact could cause burns.
- If you do not use the seating system, ensure that it is not exposed to direct sunlight for lengthy periods of time. Certain parts of the seating system, such as the seat, the back and the armrests can become hot if they have been exposed to full sunlight for too long. This may cause burns or allergic reactions to the skin.

⚠ **Moving parts**

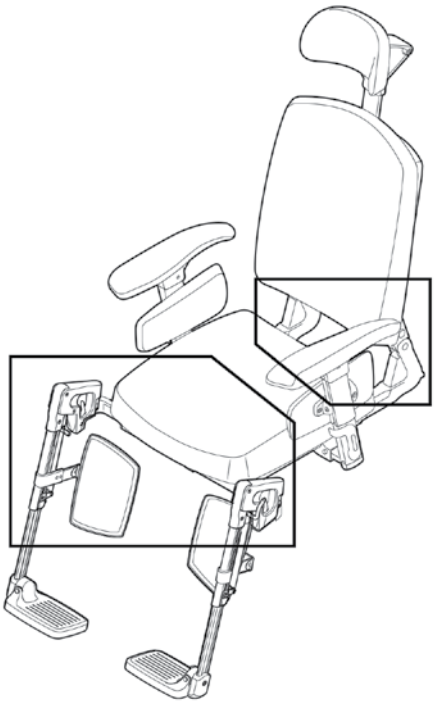

- A seating system has moving and rotating parts. Contact with moving parts may result in serious physical injury or damage to the seating system. Contact with the moving parts of the seating system should be avoided.
- Electrical backrest adjustment
- Electrical elevating legrests

⚠ **Decals and instructions on the seating system**
Decals and instructions on the seating system
- The signs, symbols and instructions affixed to the seating system comprise part of the safety facilities. They must never be covered or removed. They must remain present and clearly legible throughout the entire lifespan of the seating system.
- Replace or repair all illegible or damaged signs, symbols and instructions immediately. Please contact your supplier for assistance.

2.3 Used decals on the seating system

Check manual before using

The seating system must not be lifted up by the armrest assembly, complete and/or legrests.

The stability of the seating system is influenced by the adjustment of the seating system’s centre of gravity. Such adjustments should be made by professionals only.

3 Tools, parts and components

3.1 Tools

The tools below are needed for various mechanical settings and maintenance:

Quantity	Description	Size (mm)
1	Screwdriver, medium	-
1	Screwdriver, crosshead	-
1	Hammer (plastic)	-
1	Chaser	-
2	Open ended spanner	17
2	Ring spanner	13
1	Torx key	T25, T30
1	Loctite 243	-
#	Tie wraps	
Remark Size: the EU key width (of the relevant tool).		

⚠ Use only high-quality tools for the adjustment(s) described.
Make sure that the hexagon of the spanner is attached securely to the hexagon of the fastening article. This prevents the 'rotation' of hexagons of fastening articles and spanners that may affect proper adjustment.

4 Spare parts

4.1 Use of the parts lists

This document is meant as a reference book to be used to order parts for the seating systems that are shown on the front cover.

How to order:
When ordering parts, please specify:
- Serial number (see the identification plate)
- Group (to which the relevant part belongs)
- Article number
- Number of parts required
- Description (in the relevant language)
- Dimensions (if applicable)

Remark:
- If a part does not have an article number, it means that the part concerned cannot be purchased separately. The part concerned is part of the assembly shown. This assembly must be ordered as one piece. It has to be replaced in its entirety.
- Boxed position numbers refer to the relevant drawing.

Order address:
Please mail or fax your orders to your supplier.

Service technicians:
Repairs may only be carried out by trained and authorised service technicians.
During the execution of their work they are at all times fully responsible for the fulfilment of locally applicable safety guidelines and standards.
Temporary employees and persons in training may only carry out repair and replacement work under the supervision of an authorised service technician.

4.2 Sedeo Lite

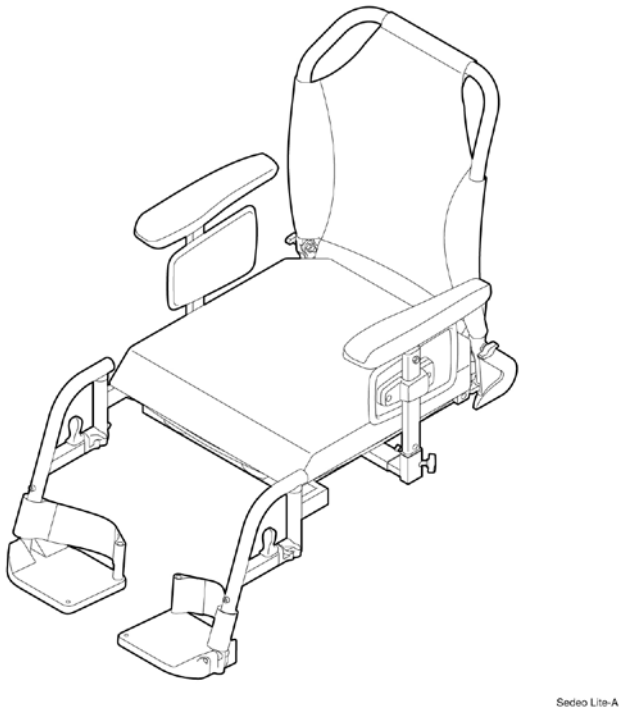

Pos	Description	Page
1	Seat frame	13
2	Seat cushion	14
3	Backrest frame	15
4	Backrest cushion	16
5	Standard legrest	17
6	Comfort legrest	18
7	Removable armrest	19
8	Headrest	20
9	Joystick bracket	21
10	Lighting	22
11	Positioning belt	23

1 Sedeo Lite / Seat frame

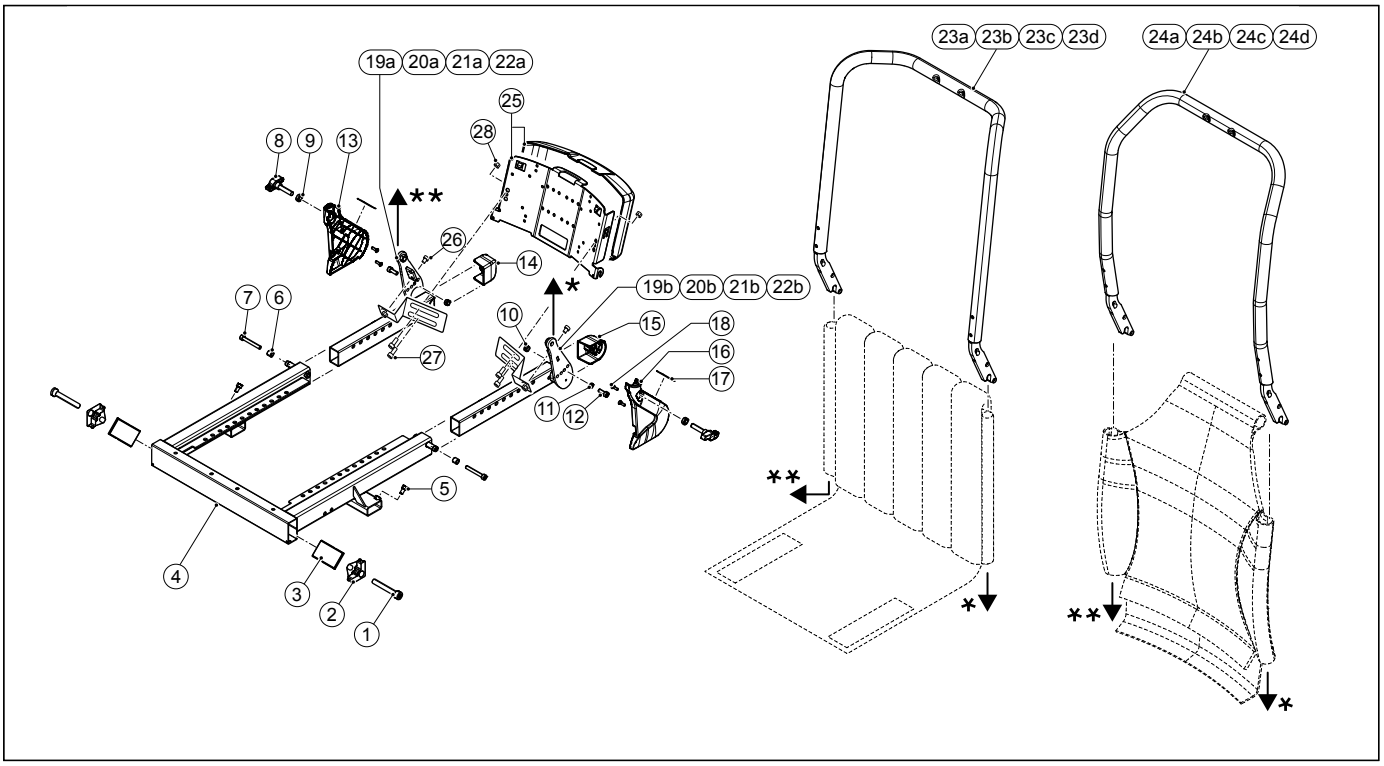

Pos	Qty	Article number	Description
1	2	1015338	Torx iso14579 cil.head M6x50 (100 pieces)
1-3	1	1010873	Legrest clamp, set
1-7	1	1012920	Seat frame
5	2	1015339	Torx socket head screw M6x12 iso10642 (100 pieces)
7	2	1015338	Torx iso14579 cil.head M6x50 (100 pieces)
8,9	1	1012921	Backrest wing bolt set
10	2	-	Lock nut M6 D985/8/VZ
12	2	1015333	Torx socket head screw M6x16 iso14579 Precote 85 (100 pieces)
13-18	1	1012922	Cover set
17	1	9004028	Reflector sticker red
18	4	1015347	Ejot screw 4x12 WN5454 (100 pieces)
23a	1	1012927	Backrest frame strapped SW 42 cm
23b	1	1012928	Backrest frame strapped SW 45 cm
23c	1	1012929	Backrest frame strapped SW 48 cm
23d	1	1012930	Backrest frame strapped SW 51 cm
24a	1	9006172	Backrest frame sling SW 42 cm
24b	1	9006173	Backrest frame sling SW 45 cm
24c	1	9006174	Backrest frame sling SW 48 cm
24d	1	9006175	Backrest frame sling SW 51 cm
6-12,19a,19b	1	1012923	Backrest hinge set SW 42 cm
6-12,20a,20b	1	1012924	Backrest hinge set SW 45 cm
6-12,21a,21b	1	1012925	Backrest hinge set SW 48 cm
6-12,22a,22b	1	1012926	Backrest hinge set SW 51 cm
6-18,19a,19b,23a	1	1016173	Backrest frame complete with backrest with adjustable straps SW 42 cm
6-18,20a,20b,23b	1	1016174	Backrest frame complete with backrest with adjustable straps SW 45 cm
6-18,21a,21b,23c	1	1016175	Backrest frame complete with backrest with adjustable straps SW 48 cm
6-18,22a,22b,23d	1	1016176	Backrest frame complete with backrest with adjustable straps SW 51 cm
6-18,19a,19b,24a	1	1016177	Backrest frame complete with sling SW 42 cm
6-18,20a,20b,24b	1	1016178	Backrest frame complete with sling SW 45 cm
6-18,21a,21b,24c	1	1016179	Backrest frame complete with sling SW 48 cm
6-18,22a,22b,24d	1	1016180	Backrest frame complete with sling SW 51 cm
25	1	9006188	Electronics box PWC Sedeo Lite
26	2	1015331	Torx socket head screw M6x10 iso 14579 Precote 85 (100 pieces)
27	4	1015330	Torx socket head screw M6x8 iso 14579 Precote 85 (100 pieces)
28	4	-	Lock nut M6 D985/8/VZ

2 Sedeo Lite / Seat cushion

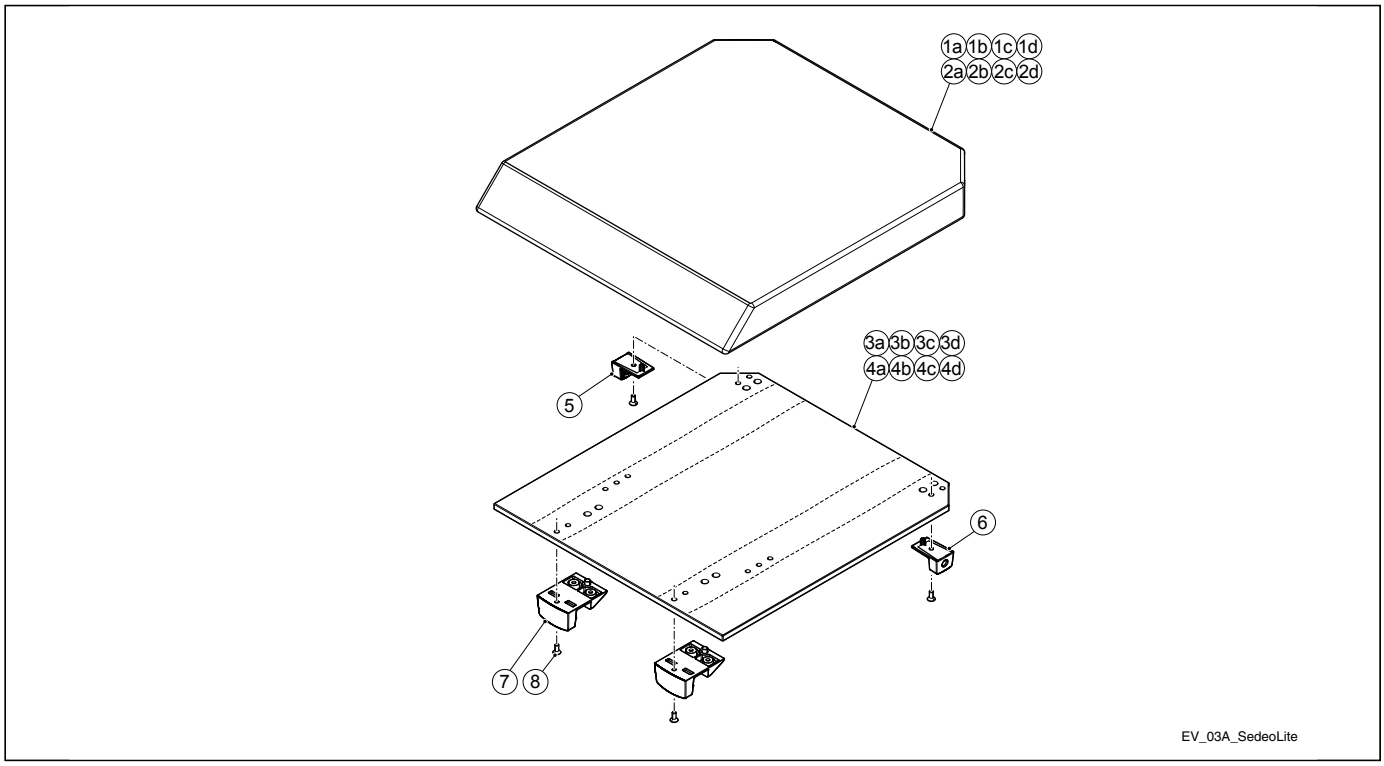

Pos	Qty	Article number	Description
1a	1	3104365	Seat cushion 42x39 cm
1b	1	58602	Seat cushion 45x39 cm
1c	1	58220	Seat cushion 48x39 cm
1d	1	58221	Seat cushion 51x39 cm
2a	1	3104366	Seat cushion 42x45 cm
2b	1	51831	Seat cushion 45x45 cm
2c	1	54526	Seat cushion 48x45 cm
2d	1	54326	Seat cushion 51x45 cm
3a,5-8	1	1012941	Seat board 42x39 cm
3b,5-8	1	1012942	Seat board 45x39 cm
3c,5-8	1	1012943	Seat board 48x39 cm
3d,5-8	1	1012944	Seat board 51x39 cm
4a,5-8	1	1012945	Seat board 42x45 cm
4b,5-8	1	1012946	Seat board 45x45 cm
4c,5-8	1	1012947	Seat board 48x45 cm
4d,5-8	1	1012948	Seat board 51x45 cm
8	4	1015346	Torx socket head screw M5x25 T30 (100 pieces)

3 Sedeo Lite / Backrest frame

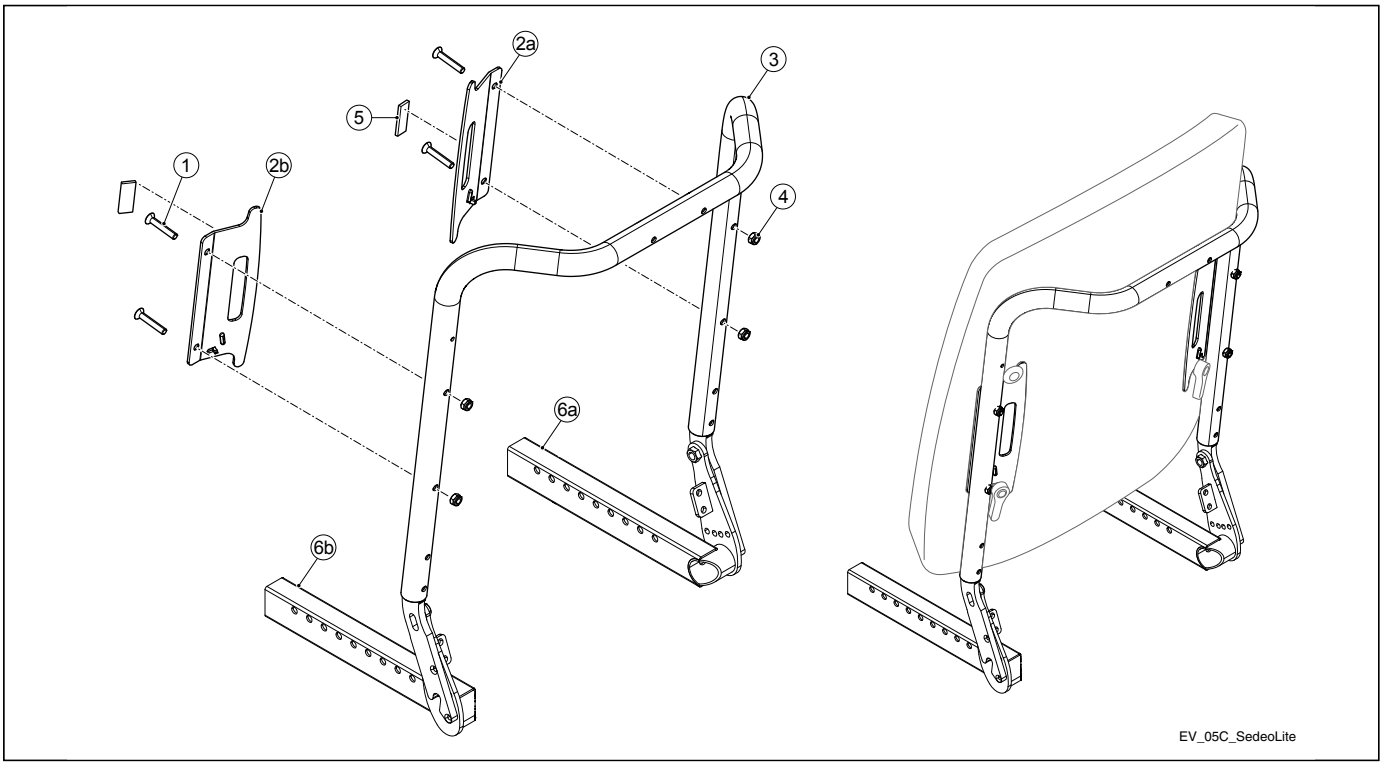

Pos	Qty	Article number	Description
1	4	1015341	Torx Countersunk socket head screw M6x35 din7991T (100 pieces)
1-6b	1	1012961	Comfort Backrest mounting set
1-2b,4,5	1	1014903	Mounting bracket set comfort Backrest for Backrest frame SW 45 cm
4	4	-	Lock nut M6 D985/8/VZ

4 Sedeo Lite / Backrest cushion

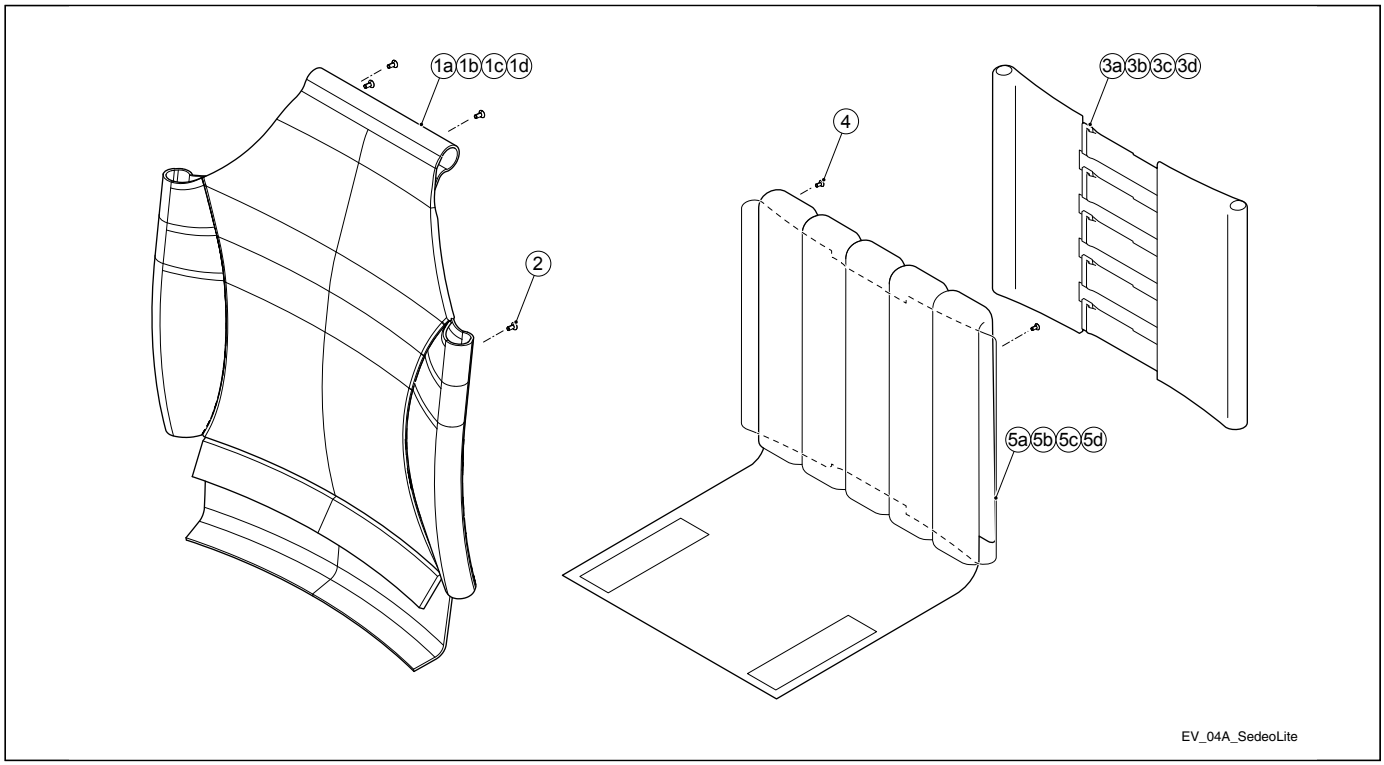

Pos	Qty	Article number	Description
1a,2	1	1012950	Backrest sling SW 42 cm
1b,2	1	1012951	Backrest sling SW 45 cm
1c,2	1	1012952	Backrest sling SW 48 cm
1d,2	1	1012953	Backrest sling SW 51 cm
2	4	1015345	Torx countersunk socket head screw M6x8 din7991T (100 pieces)
3a,4,5a	1	1012954	Backrest with adjustable straps SW 42 cm
3b,4,5b	1	1013161	Backrest with adjustable straps SW 45 cm
3c,4,5c	1	1012955	Backrest with adjustable straps SW 48 cm
3d,4,5d	1	1013162	Backrest with adjustable straps SW 51 cm
4	4	1015345	Torx countersunk socket head screw M6x8 din7991T (100 pieces)

5 Sedeo Lite / Standard legrest

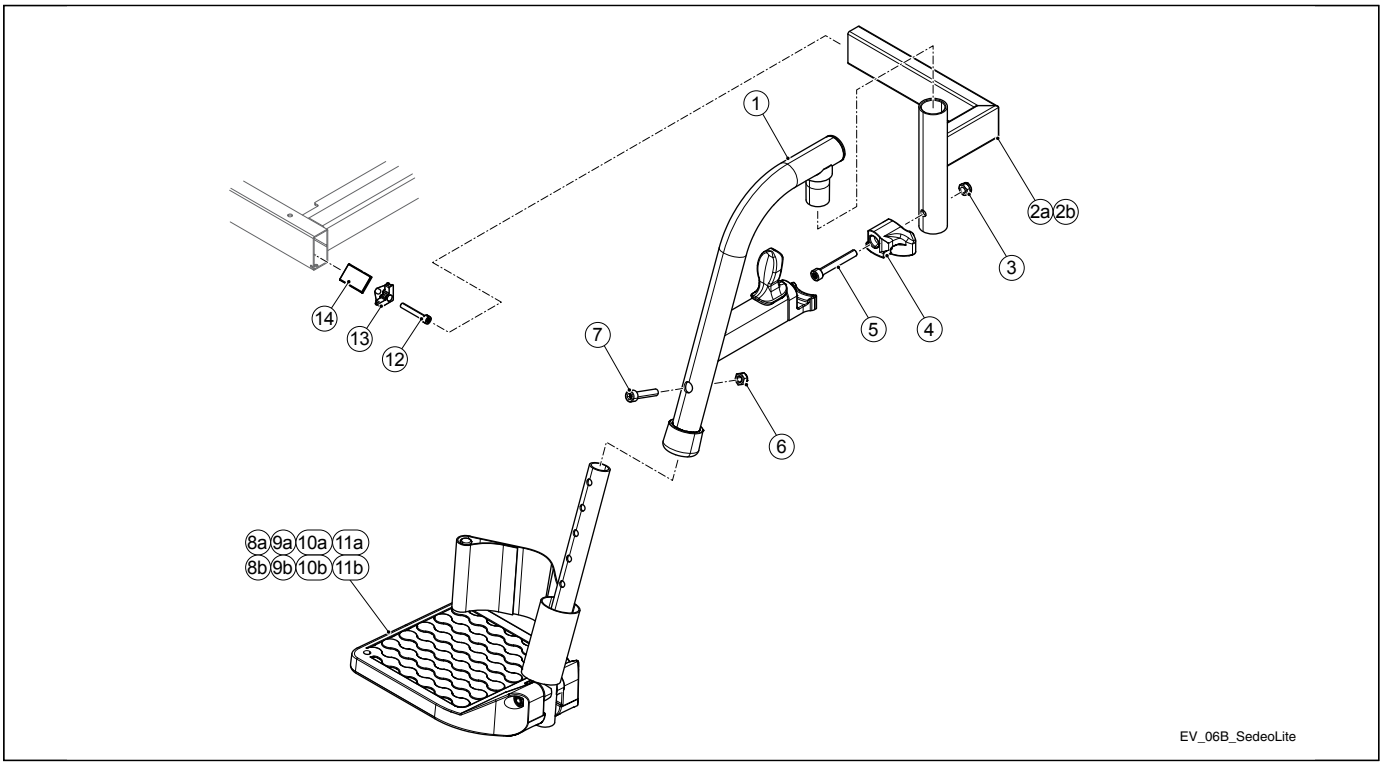

Pos	Qty	Article number	Description
1	2	1012934	Standard legrest upper part assy
2a-5	1	1012932	Legrest socket, right
2b-5	1	1012931	Legrest socket, left
3	2	-	Lock nut M6 D985/8/VZ
3-5	2	1012933	Fixing for hanger
5	2	1015336	Torx socket head screw M6x40 iso14579 Precote 85 (100 pieces)
6-8a	1	3353418	Footplate with fixed angle and heel strap SW 42 cm, right
6-8b	1	3353419	Footplate with fixed angle and heel strap SW 42 cm, left
6-9a	1	3353420	Footplate with fixed angle and heel strap SW 45 cm, right
6-9b	1	3353421	Footplate with fixed angle and heel strap SW 45 cm, left
6-10a	1	3353422	Footplate with fixed angle and heel strap SW 48 cm, right
6-10b	1	3353423	Footplate with fixed angle and heel strap SW 48 cm, left
6-11a	1	3353424	Footplate with fixed angle and heel strap SW 51 cm, right
6-11b	1	3353425	Footplate with fixed angle and heel strap SW 51 cm, left
6	2	-	Lock nut M6 D985/8/VZ
7	2	-	Socket head screw M6X30 din912
1,6-8a	1	1014019	Standard legrest SW 42 cm, right
1,6-8b	1	1014020	Standard legrest SW 42 cm, left
1,6-9a	1	1014021	Standard legrest SW 45 cm, right
1,6-9b	1	1014022	Standard legrest SW 45 cm, left
1,6-10a	1	1014023	Standard legrest SW 48 cm, right
1,6-10b	1	1014024	Standard legrest SW 48 cm, left
1,6-11a	1	1014025	Standard legrest SW 51 cm, right
1,6-11b	1	1014026	Standard legrest SW 51 cm, left
1-8b	1	1014035	Standard legrest set SW 42 cm
1-9b	1	1014036	Standard legrest set SW 45 cm
1-10b	1	1014037	Standard legrest set SW 48 cm
1-11b	1	1014038	Standard legrest set SW 51 cm
12	2	1015338	Torx socket head screw M6x50 iso 14579 (100 pieces)
12-14	1	1010873	Legrest clamp, set

6 Sedeo Lite / Manually elevating legrest

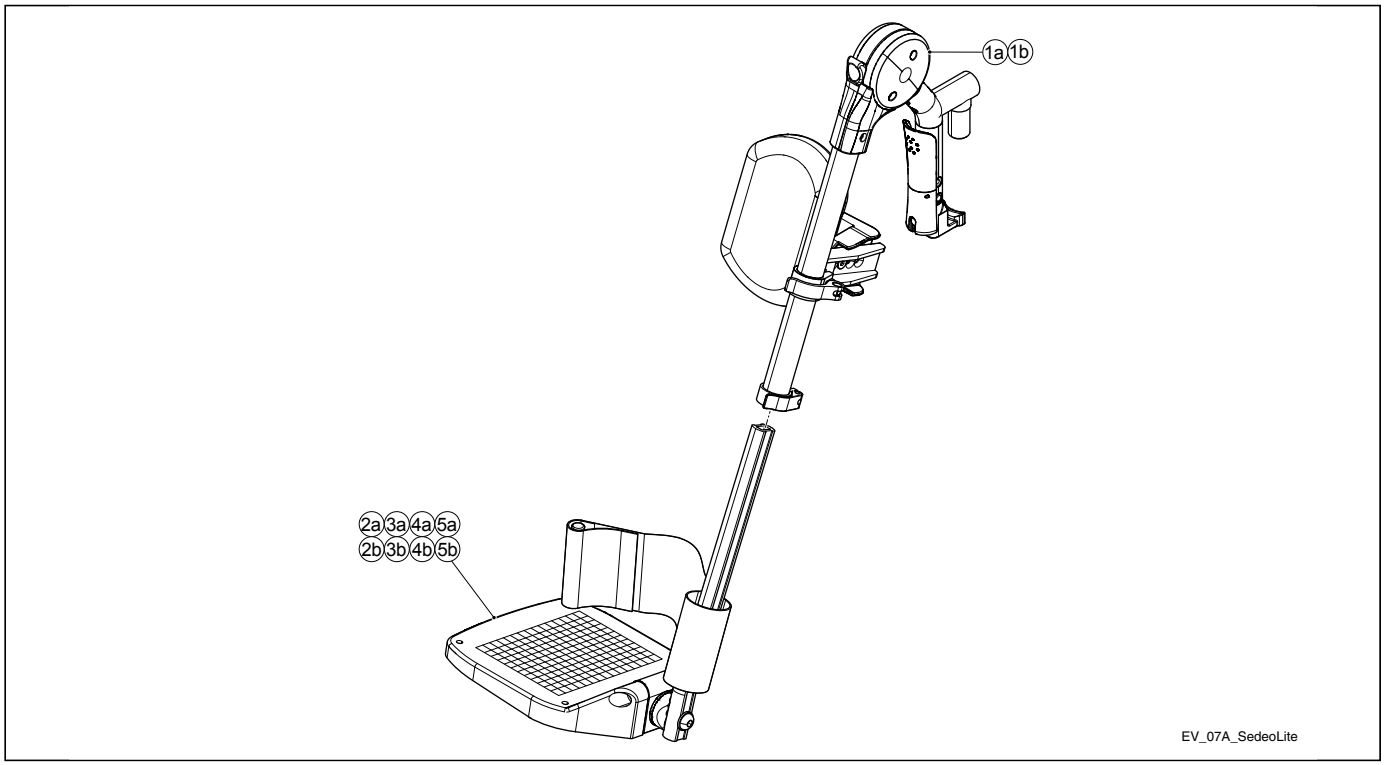

Pos	Qty	Article number	Description
1a	1	3353521	Manually elevating legrest upper part right
1b	1	3353522	Manually elevating legrest upper part left
2a	1	3353318	Footplate angle adjustable with heel strap SW 42 cm right
2b	1	3353319	Footplate angle adjustable with heel strap SW 42 cm left
3a	1	3353320	Footplate angle adjustable with heel strap SW 45 cm right
3b	1	3353321	Footplate angle adjustable with heel strap SW 45 cm left
4a	1	3353322	Footplate angle adjustable with heel strap SW 48 cm right
4b	1	3353323	Footplate angle adjustable with heel strap SW 48 cm left
5a	1	3353324	Footplate angle adjustable with heel strap SW 51 cm right
5b	1	3353325	Footplate angle adjustable with heel strap SW 51 cm left
1a,2a	1	1014027	Manually elevating legrest SW 42 cm right
1b,2b	1	1014028	Manually elevating legrest SW 42 cm left
1a,3a	1	1014029	Manually elevating legrest SW 45 cm right
1b,3b	1	1014030	Manually elevating legrest SW 45 cm left
1a,4a	1	1014031	Manually elevating legrest SW 48 cm right
1b,4b	1	1014032	Manually elevating legrest SW 48 cm left
1a,5a	1	1014033	Manually elevating legrest SW 51 cm right
1b,5b	1	1014034	Manually elevating legrest SW 51 cm left
1a,1b,2a,2b	1	1014039	Manually elevating legrest set SW 42 cm
1a,1b,3a,3b	1	1014040	Manually elevating legrest set SW 45 cm
1a,1b,4a,4b	1	1014041	Manually elevating legrest set SW 48 cm
1a,1b,5a,5b	1	1014042	Manually elevating legrest set SW 51 cm

7 Sedeo Lite / Removable armrest

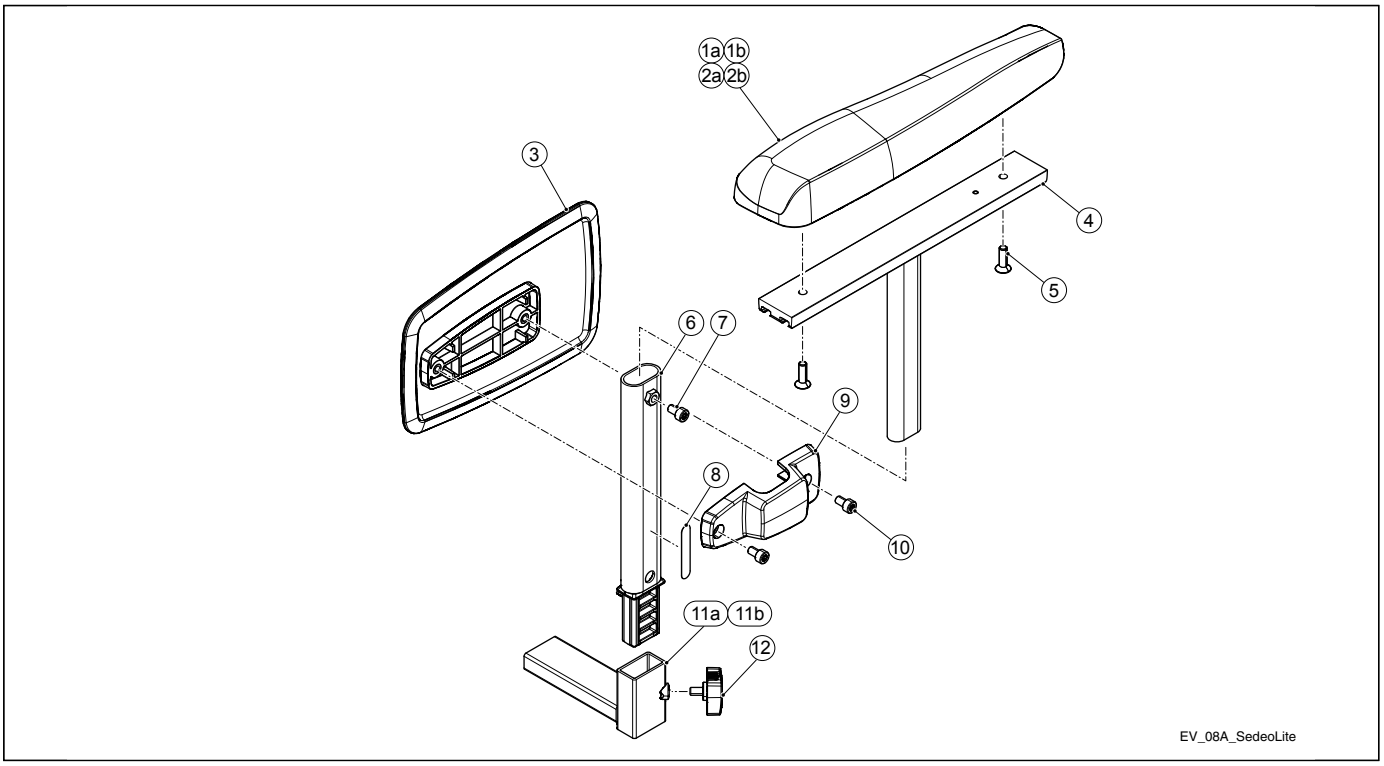

Pos	Qty	Article number	Description
1a,5	2	1010905	Armrest pad 40 cm, right
1b,5	2	1010904	Armrest pad 40 cm, left
2a,5	2	1010908	Armrest pad 30 cm, right
2b,5	2	1010909	Armrest pad 30 cm, left
3,10	2	1010911	Side plate PA
3,9,10	1	1016191	Side plate PA set incl mounting bracket Sedeo Lite
4	2	1012939	Armrest upper part
5	4	1015340	Torx countersunk socket head screw M6x20 Iso10642 Precote 85 (100 pieces)
6-8	2	1012938	Armrest middle part
7	2	1015331	Torx socket head screw M6x10 iso14579 Precote 85 (100 pieces)
8	2	9004048	Reflector sticker orange
9	1	1012940	Side supports mounting, set
10	4	1015331	Torx socket head screw M6x10 iso14579 Precote 85 (100 pieces)
11a,12	1	1012936	Armrest socket, right
11b,12	1	1012937	Armrest socket, left
4,6-8,11a,12	1	1014043	Armrest complete, right
4,6-8,11b,12	1	1014044	Armrest complete, left
4,6-8,11a+b,12	1	1016181	Armrest complete, set

8 Sedeo Lite / Headrest

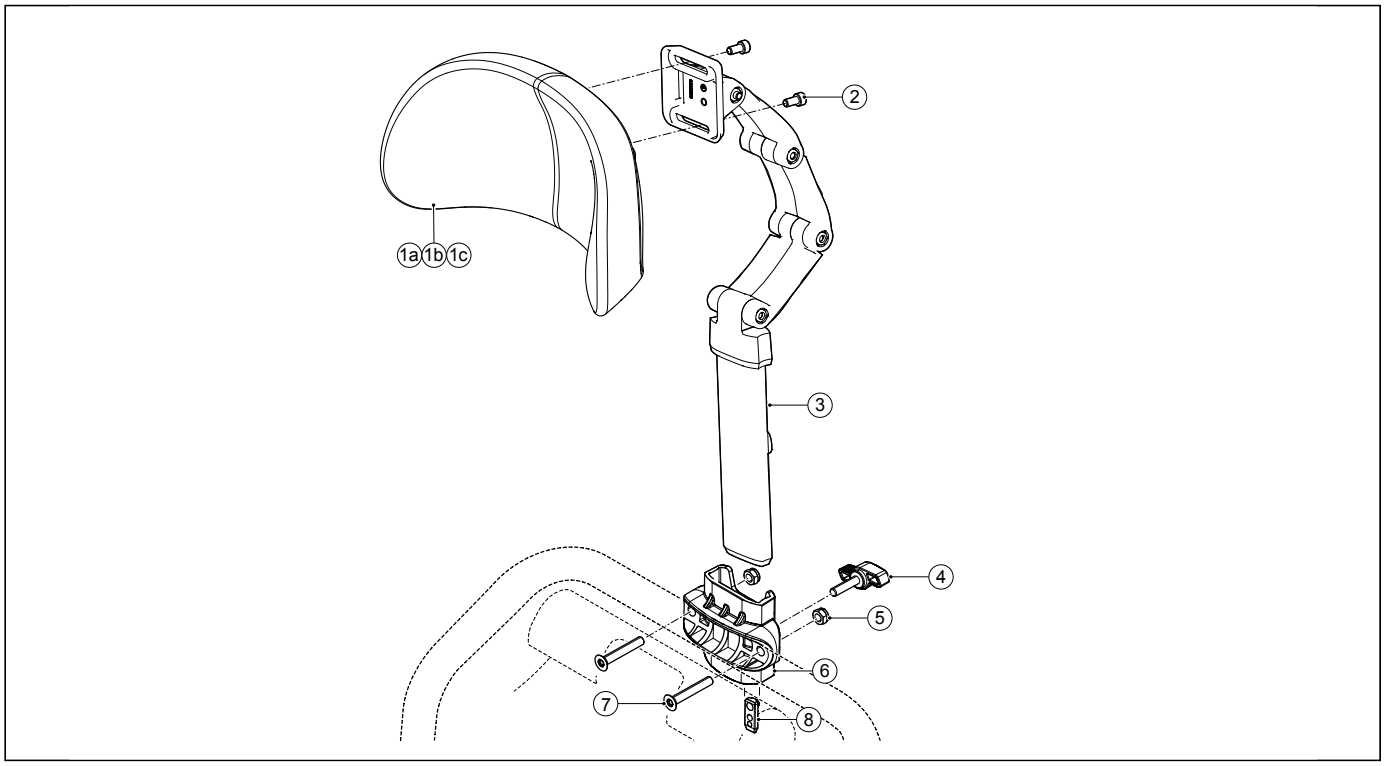

Pos	Qty	Article number	Description
1a,2	1	1010957	Headrest small
1b,2	1	1010996	Headrest large
1c,2	1	1010997	Headrest flexible
2	2	1015339	Torx socket head screw M6x12 iso10642 (100 pieces)
3	1	1010954	Headrest metal parts
4-8	1	1012949	Headrest metal part reciever
5	2	-	Lock nut M6 D985/8/VZ
7	2	1015341	Torx countersunk socket head screw M6x35 din7991T (100 pieces)
1a,2-8	2	1016182	Headrest small with metal parts and reciever Sedeo Lite

9 Sedeo Lite / Joystick bracket

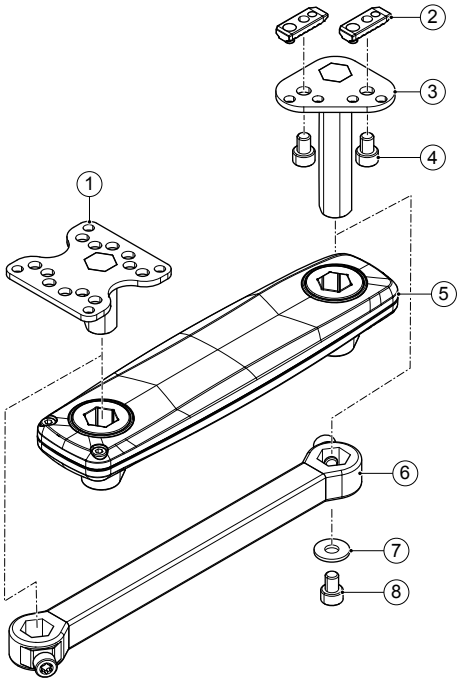

Pos	Qty	Article number	Description
1	1	1010949	Remote interface bracket
2	4	1010881	Clamp nut (10 pieces)
2-4, 7, 8	1	1010950	Remote Armrest bracket
4	2	1015330	Torx socket head screw M6x8 din7984T Precote 85 (100 pieces)
5	1	1010951	Swing-away remote holder
6	1	1010952	Standard remote holder
1-5, 7, 8	1	1011164	Swing-away remote holder complete
1-4, 6-8	1	1011165	Standard remote holder complete
7	1	-	Washer 3xD M6 D9021
8	1	1015331	Torx socket head screw M6x10m iso 14579 Precote 85 (100 pieces)
-	1	0001494	Gear belt 160 XL 3/8" ISO 5296

10 Sedeo Lite / Lighting

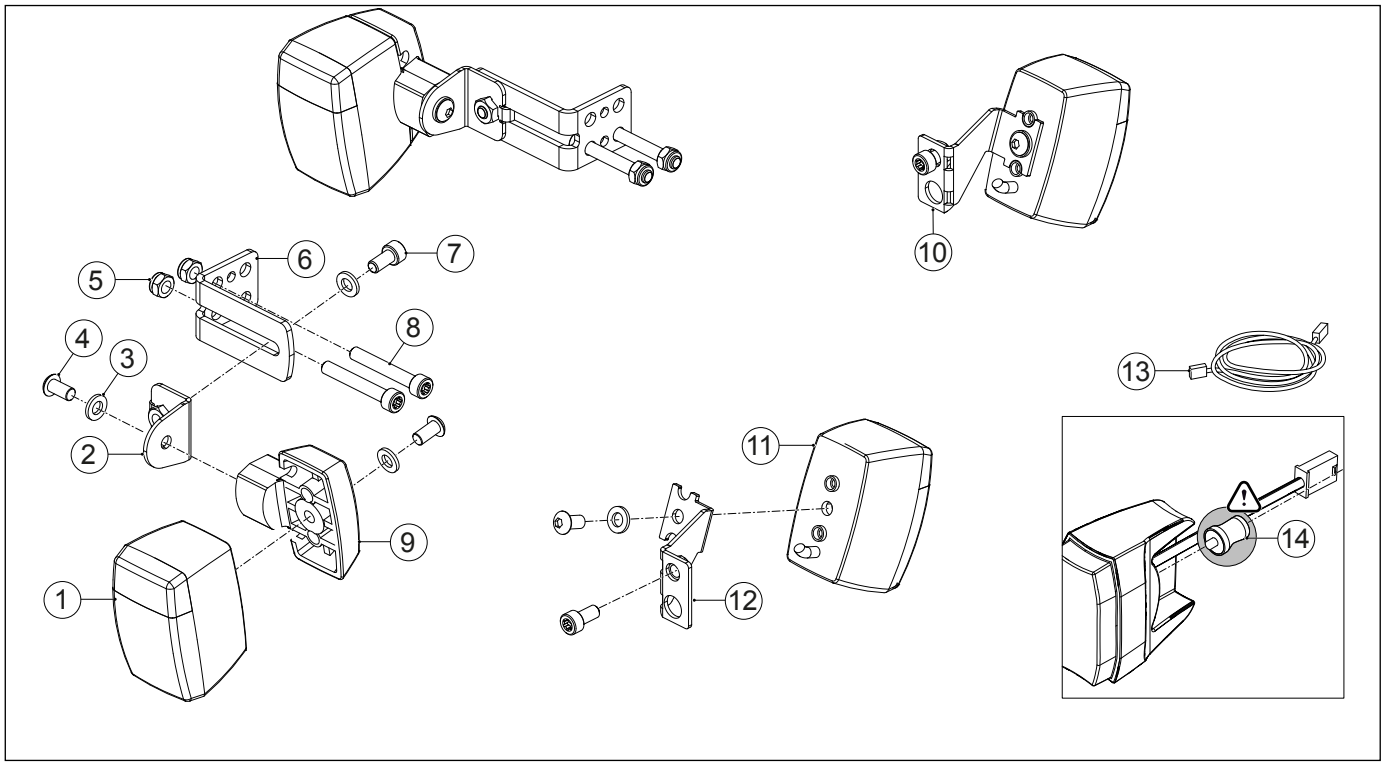

Pos	Qty	Article number	Description
1	2	6002661	Front light module standard
1	2	6000038	Front light module StVZO
1-9	2	1012957	Front light module incl mounting bracket, left = right
1-13	1	1014907	Lighting set Shark
1-13	1	1014908	Lighting set DX2
1-13	1	1014909	Lighting set R-net
1-13	1	1014910	Lighting set VR2
3,4,7,10,11	1	1012959	Rear light module incl mounting bracket, right
3,4,7,11,12	1	1012960	Rear light module incl mounting bracket, left
4	6	-	Buttonhead M6x12 ISO7380
5	4	-	Lock nut M6 D985/8/VZ
7	4	1015331	Torx socket head screw M6x10 iso14579 Precote 85 (100 pieces)
8	4	1015336	Torx socket head screw M6x40 iso14579 Precote 85 (100 pieces)
9	2	6000056	Light rubber mounting unit, left = right
11	2	6000039	Rear light module
13	1	9006302	Lighting harness Shark, no tilt and/or lift
13	1	9006298	Lighting harness Shark with tilt and/or lift
13	1	9006312	Lighting harness DX2, no tilt and/or lift
13	1	9006313	Lighting harness DX2 with tilt and/or lift
13	1	9006331	Lighting harness R-net lighting
13	1	9006332	Lighting harness R-net lighting and horn
13	1	9006333	Lighting harness VR2

11 Sedeo Lite / Positioning belt

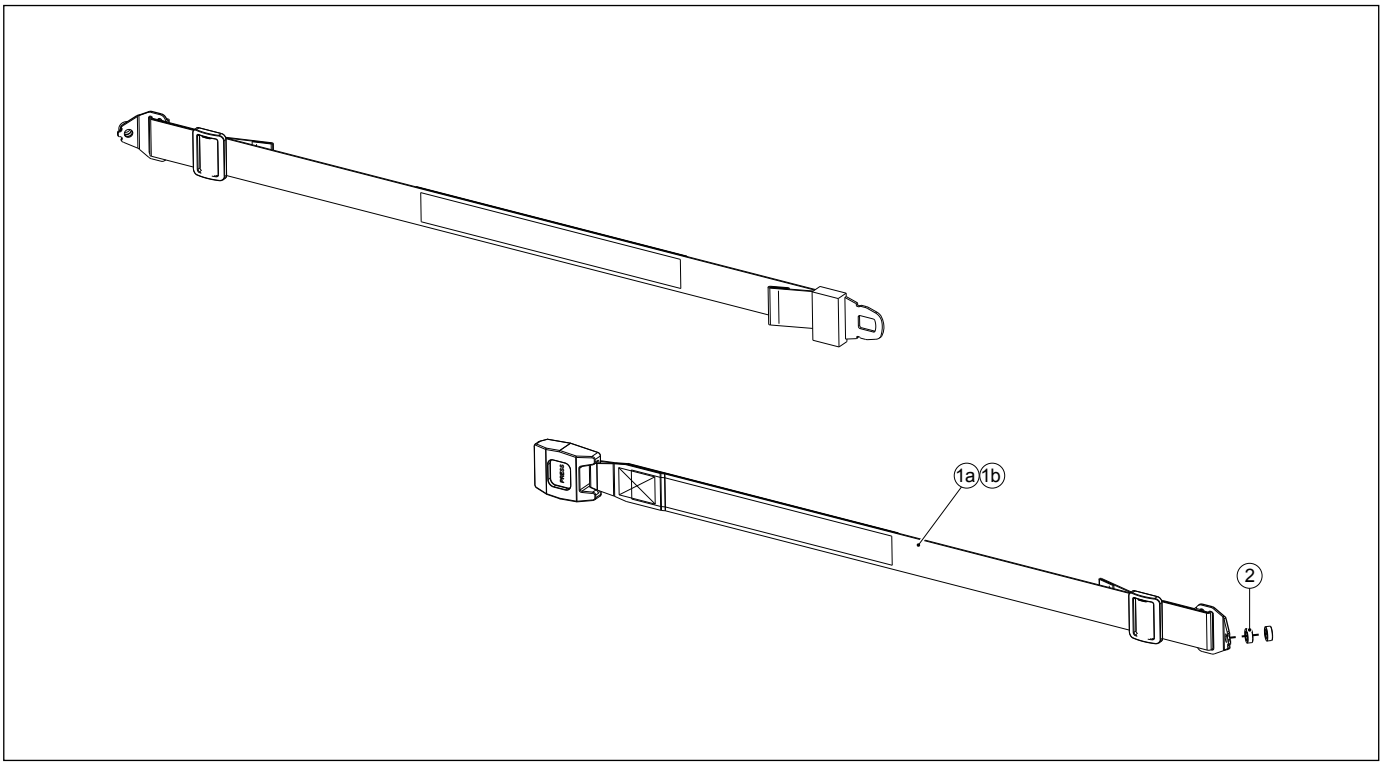

Pos	Qty	Article number	Description
1a,2	1	1010991	Positioning belt short
1b,2	1	1010992	Positioning belt long
2	4	-	Distance bush 13,5 x 8,5 x 5 mm

4.3 Sedeo Pro

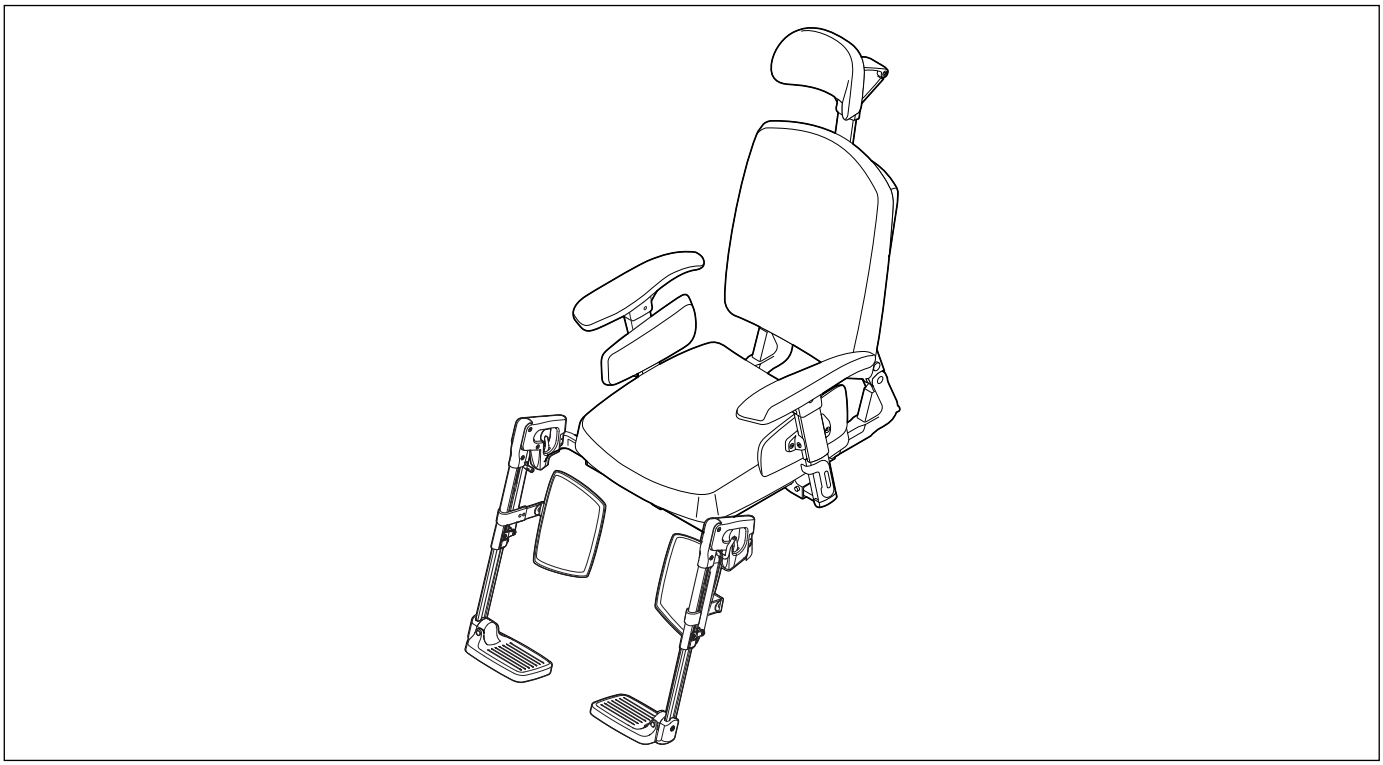

Pos	Description	Page
12	Sedeo Pro / Seat frame	25
13	Sedeo Pro / Push bar	27
14	Sedeo Pro / Seat cushion	28
15	Sedeo Pro / Backrest	38
16	Sedeo Pro / Backrest flexible	43
17	Sedeo Original / Mounting bracket for legrest	47
18	Mounting bracket for heavy duty legrest	48
19	Standard legrest	49
20	Manually elevating legrest	50
21	Electrically elevating legrest	51
22	Standard heavy duty legrest	52
23	Comfort heavy duty legrest	53
24	Sedeo Pro / Central legrest	54
25	Sedeo Pro / Manually elevating central legrest	55
26	Sedeo Pro / Electrically elevating central legrest	56
27	Sedeo Pro / Removable armrest	57
28	Sedeo Pro / Flip up armrest	58
29	Sedeo Pro / Headrest	59
30	Sedeo Pro / Joystick bracket	60
31	Sedeo Pro / Lighting on flip up armrest	61
32	Sedeo Pro / Lighting on seat frame	62
33	Sedeo Pro / Abduction support	63
34	Sedeo Pro / Hemiplegia armrest - Side cushions wegde shaped - Mirror - Armrest bag	64
35	Sedeo Pro / Positioning belt - Cane holder - Thigh support	65
36	Sedeo Pro / Worktops manual wheelchair	66
37	Sedeo Pro / Worktops power wheelchair	67
38	Sedeo Pro / Third party backrest	68
39	Sedeo Original / Standard legrest	69
40	Sedeo Original / Manually elevating legrest	71
41	Sedeo Original / Electrically elevating legrest	73

12 Sedeo Pro / Seat frame

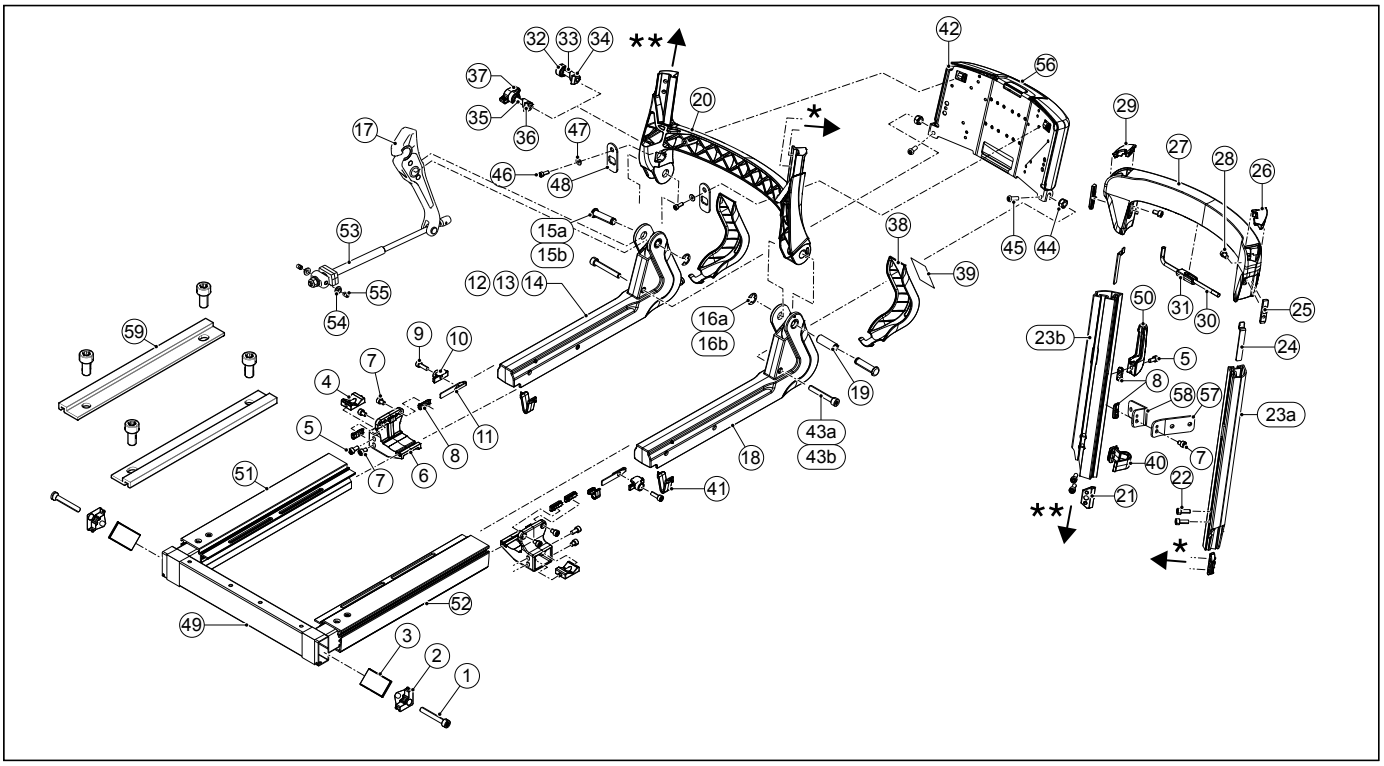

Pos	Qty	Article no	Description
1	2	1015338	Torx iso14579 cil.head M6x50 (100 pieces)
1-3	2	1010873	Legrest clamp, set
4-8	1	1010880	Armrest holder
4-11,13,15a,16a,17-36,38,39, 41,49,51,52	1	1016184	Seat frame complete with backrest with gasspring
4-11,13,15a,16a,17-31,35-39, 41,49,51,52	1	1016193	Seat frame complete with backrest with gasspring with foldable clamp, set
4-11,14,15a,16a,17-36,38,39, 41,49,51,52	1	1016185	Seat frame complete with backrest electrical
4-11,14,15a,16a,17-31,35-39, 41,49,51,52	1	1016194	Seat frame complete with backrest electrical with foldable clamp, set
4-12,15b,16b,17-36,38,39, 41,49,51-55	1	1016183	Seat frame complete with backrest mechanical
4-12,15b,16b,17-31,35-39, 41,49,51-55	1	1016192	Seat frame complete with backrest mechanical with foldable clamp, set
5	2	1015332	Torx socket head screw M6x12 iso14579 Precote 85 (100 pieces)
7	5	1015330	Torx socket head screw M6x8 din7984T Precote 85 (100 pieces)
8	2	1010881	Clamp nut (10 pieces)
9	2	1015333	Torx socket head screw M6x16 iso14579 Precote 85 (100 pieces)
9-11	1	1010876	Seat depth fixation (2 pieces)
12,15b,16b,17,19,41,53-55	1	1010874	Backrest slider mechanical, right
12,15b,16b,17-29,32-36, 41,53-55	1	1010879	Backrest mechanical
13,15a,16a,17,19,41	1	1010964	Backrest slider gasspring, right
13,15a,16a,17-29,32-36,41	1	1011160	Backrest with gasspring
14,15a,16a,17,19,41	1	1010965	Backrest slider electrical
14,15a,16a,17-29,32-36,41	1	1011161	Backrest electrical
15a,16a	2	1017875	Hinge axis for gasspring / electrical backrest, set
15b,16b	2	1017876	Hinge axis for mechanical backrest, set
15a+b,16a+b,18,19,41	1	1010875	Backrest slider, left
17	1	9010232	Backrest lever
17,53-55	1	1016687	Backrest shaft mechanical
20	1	9003102	Backrest hinge part
21-22	2	1010883	Backrest profile clamp, set
22	4	1015333	Torx socket head screw M6x16 iso14579 Precote 85 (100 pieces)
24-29	1	1010878	Backrest frame upper part

Continued from **12 Sedeo Pro / Seat frame**

Pos	Qty	Article number	Description
25	2	1015133	Clamp nut profile for backrest frame (10 pieces)
26,29	1	1010895	Cover Backrest frame (set, left = right)
28	2	1015331	Torx socket head screw M6x10 iso14579 Precote 85 (100 pieces)
30,31	1	1010884	Adjusting tool set, Torx
32-34	1	1010882	Backrest clamp, set
35-37	1	1010887	Foldable backrest clamp, set
38-39	2	1010885	Backrest angle adjustment cover
39	2	9004028	Reflector label red
40	8	1010877	Cable fixations (10 pieces)
41	2	9004359	Slider locking clip
42-48, 56	1	9005131	Electronics box PWC
43a	2	-	Socket head screw M8x50 DIN912
43b	2	-	Socket head screw M8x60 DIN912
44	2	-	Locking nut M8 D985/8/VZ
45	2	-	Buttonhead M5x10
46	2	1015794	Ejot 50x16 (100 pieces)
46-48	2	1015793	Mounting set electronics box
49	1	9003096	Legrest bracket
50,5,8	1	1012271	Bag hook
51	1	9003099	Seat frame profile right
52	1	9003100	Seat frame profile left
56	1	9005583	Cover for electronics box
57,7,8	1	1017910	Accessory adapter bracket 0 degrees, set
58,7,8	1	1017911	Accessory adapter bracket 90 degrees, set
59	1	1018110	Interface clamp set, Sedeo Pro
-	-	9010335	Upgrade set Sedeo Pro 2.0
-	-	1016741	Control for gasspring backrest, operated by user, left
-	-	1016742	Control for gasspring backrest, operated by user, right
-	-	1016736	Backrest slider right with gasspring, operated by user, right
-	-	1016737	Backrest slider right with gasspring, operated by user, left

13 Sedeo Pro / Push bar

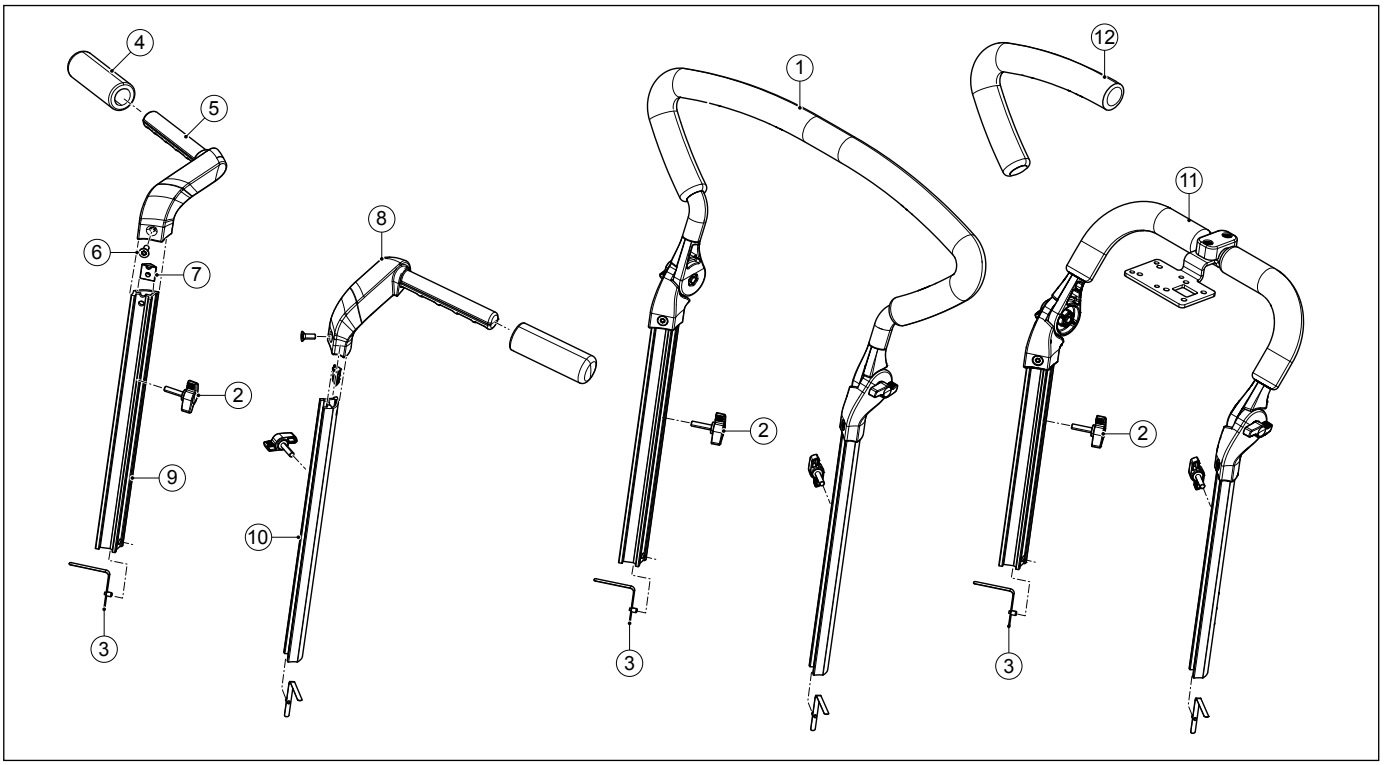

Pos	Qty	Article number	Description
1-3,12	1	1010998	Push bar, angle adjustable
2,3,11,12	1	1012272	Push bar for attendant control
2-7,9	1	1010890	Push handle, right
2-4,6-8,10	1	1010891	Push handle, left
2	2	1010894	Wing screw M6x25 (10 pieces)
3	2	1010893	Push handle locking clip
4	1	1010892	Push grip (set of 2)
6	2	1015340	Torx countersunk socket head screw M6x20 iso10642 Precote 85 (100 pieces)
12	2	1021427	Foam for push bar, angle adjustable, Sedeo Pro (10 pieces)

14 Sedeo Pro / Seat cushion

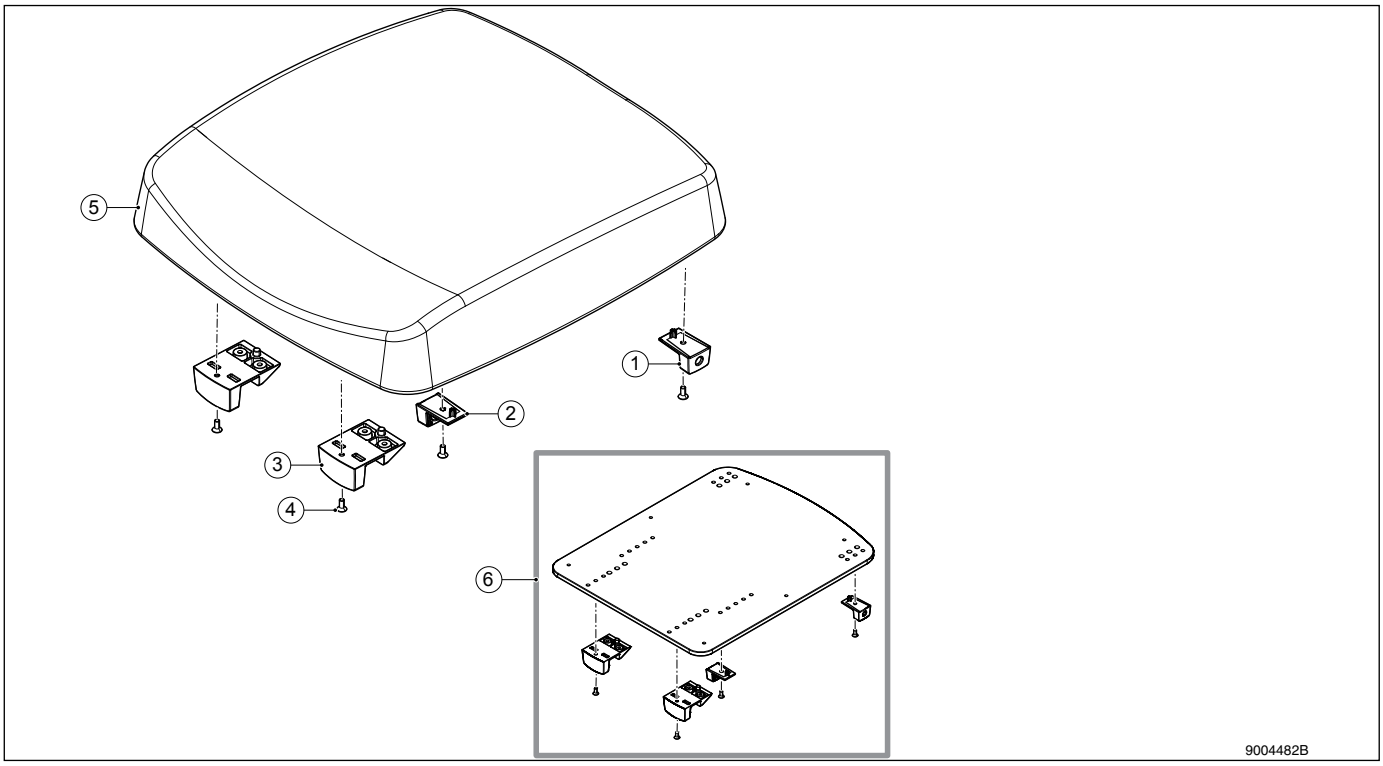

Pos	Qty	Article number	Description
1-4	1	1010953	Seat cushion mounting set
4	4	1015346	Torx socket head screw M5x16 T30 (100 pieces)
6	1	1012267	Interface board Sedeo original
1-5	1	22502522-009M	SEDEO Seat Profiled SW42 SD50 Incontinence
1-5	1	22502522-018M	SEDEO Seat Profiled SW42 SD56 Incontinence
1-5	1	22502522-011M	SEDEO Seat Profiled SW46 SD50 Incontinence
1-5	1	22502522-020M	SEDEO Seat Profiled SW46 SD56 Incontinence
1-5	1	22502522-013M	SEDEO Seat Profiled SW50 SD50 Incontinence
1-5	1	22502522-022M	SEDEO Seat Profiled SW50 SD56 Incontinence
1-5	1	22502522-014M	SEDEO Seat Profiled SW54 SD50 Incontinence
1-5	1	22502522-023M	SEDEO Seat Profiled SW54 SD56 Incontinence
1-5	1	22502522-109M	SEDEO Seat Profiled SW42 SD50 Comfort
1-5	1	22502522-118M	SEDEO Seat Profiled SW42 SD56 Comfort
1-5	1	22502522-111M	SEDEO Seat Profiled SW46 SD50 Comfort
1-5	1	22502522-120M	SEDEO Seat Profiled SW46 SD56 Comfort
1-5	1	22502522-113M	SEDEO Seat Profiled SW50 SD50 Comfort
1-5	1	22502522-122M	SEDEO Seat Profiled SW50 SD56 Comfort
1-5	1	22502522-114M	SEDEO Seat Profiled SW54 SD50 Comfort
1-5	1	22502522-123M	SEDEO Seat Profiled SW54 SD56 Comfort
1-5	1	22502540-002M	SEDEO Seat Memory SW42 SD50 Incontinence
1-5	1	22502540-008M	SEDEO Seat Memory SW42 SD56 Incontinence
1-5	1	22502540-003M	SEDEO Seat Memory SW46 SD50 Incontinence
1-5	1	22502540-009M	SEDEO Seat Memory SW46 SD56 Incontinence
1-5	1	22502540-004M	SEDEO Seat Memory SW50 SD50 Incontinence
1-5	1	22502540-010M	SEDEO Seat Memory SW50 SD56 Incontinence
1-5	1	22502540-005M	SEDEO Seat Memory SW54 SD50 Incontinence
1-5	1	22502540-011M	SEDEO Seat Memory SW54 SD56 Incontinence
1-5	1	22502544-009M	SEDEO Seat Support SW42 SD50 Incontinence
1-5	1	22502544-018M	SEDEO Seat Support SW42 SD56 Incontinence
1-5	1	22502544-011M	SEDEO Seat Support SW46 SD50 Incontinence
1-5	1	22502544-020M	SEDEO Seat Support SW46 SD56 Incontinence
1-5	1	22502544-013M	SEDEO Seat Support SW50 SD50 Incontinence

Continued from **14 Sedeo Pro / Seat cushion**

Pos	Qty	Article number	Description
1-5	1	22502544-022M	SEDEO Seat Support SW50 SD56 Incontinence
1-5	1	22502544-014M	SEDEO Seat Support SW54 SD50 Incontinence
1-5	1	22502544-023M	SEDEO Seat Support SW54 SD56 Incontinence
1-5	1	22502544-109M	SEDEO Seat Support SW42 SD50 Comfort
1-5	1	22502544-118M	SEDEO Seat Support SW42 SD56 Comfort
1-5	1	22502544-111M	SEDEO Seat Support SW46 SD50 Comfort
1-5	1	22502544-120M	SEDEO Seat Support SW46 SD56 Comfort
1-5	1	22502544-113M	SEDEO Seat Support SW50 SD50 Comfort
1-5	1	22502544-122M	SEDEO Seat Support SW50 SD56 Comfort
1-5	1	22502544-114M	SEDEO Seat Support SW54 SD50 Comfort
1-5	1	22502544-123M	SEDEO Seat Support SW54 SD56 Comfort
1-5	1	22502536-008M	SEDEO Seat Supportmemory SW42 SD50 Incontinence
1-5	1	22502536-014M	SEDEO Seat Supportmemory SW42 SD56 Incontinence
1-5	1	22502536-009M	SEDEO Seat Supportmemory SW46 SD50 Incontinence
1-5	1	22502536-015M	SEDEO Seat Supportmemory SW46 SD56 Incontinence
1-5	1	22502536-010M	SEDEO Seat Supportmemory SW50 SD50 Incontinence
1-5	1	22502536-016M	SEDEO Seat Supportmemory SW50 SD56 Incontinence
1-5	1	22502536-011M	SEDEO Seat Supportmemory SW56 SD50 Incontinence
1-5	1	22502536-017M	SEDEO Seat Supportmemory SW56 SD56 Incontinence
1-5	1	22502536-108M	SEDEO Seat Supportmemory SW42 SD50 Comfort
1-5	1	22502536-114M	SEDEO Seat Supportmemory SW42 SD56 Comfort
1-5	1	22502536-109M	SEDEO Seat Supportmemory SW46 SD50 Comfort
1-5	1	22502536-115M	SEDEO Seat Supportmemory SW46 SD56 Comfort
1-5	1	22502536-110M	SEDEO Seat Supportmemory SW50 SD50 Comfort
1-5	1	22502536-116M	SEDEO Seat Supportmemory SW50 SD56 Comfort
1-5	1	22502536-111M	SEDEO Seat Supportmemory SW54 SD50 Comfort
1-5	1	22502536-117M	SEDEO Seat Supportmemory SW54 SD56 Comfort
1-5	1	22502541-002M	SEDEO Seat Form SW42 SD50 Incontinence
1-5	1	22502541-008M	SEDEO Seat Form SW42 SD56 Incontinence
1-5	1	22502541-003M	SEDEO Seat Form SW46 SD50 Incontinence
1-5	1	22502541-009M	SEDEO Seat Form SW46 SD56 Incontinence
1-5	1	22502541-004M	SEDEO Seat Form SW50 SD50 Incontinence
1-5	1	22502541-010M	SEDEO Seat Form SW50 SD56 Incontinence
1-5	1	22502541-005M	SEDEO Seat Form SW54 SD50 Incontinence
1-5	1	22502541-011M	SEDEO Seat Form SW54 SD56 Incontinence
1-5	1	22502525-008M	SEDEO Stabilizer Seat SW42 SD50 Incontinence
1-5	1	22502525-014M	SEDEO Stabilizer Seat SW42 SD56 Incontinence
1-5	1	22502525-009M	SEDEO Stabilizer Seat SW46 SD50 Incontinence
1-5	1	22502525-015M	SEDEO Stabilizer Seat SW46 SD56 Incontinence
1-5	1	22502525-010M	SEDEO Stabilizer Seat SW50 SD50 Incontinence
1-5	1	22502525-016M	SEDEO Stabilizer Seat SW50 SD56 Incontinence
1-5	1	22502525-011M	SEDEO Stabilizer Seat SW54 SD50 Incontinence
1-5	1	22502525-017M	SEDEO Stabilizer Seat SW54 SD56 Incontinence
1-5	1	22502525-108M	SEDEO Stabilizer Seat SW42 SD50 Comfort
1-5	1	22502525-114M	SEDEO Stabilizer Seat SW42 SD56 Comfort
1-5	1	22502525-109M	SEDEO Stabilizer Seat SW46 SD50 Comfort
1-5	1	22502525-115M	SEDEO Stabilizer Seat SW46 SD56 Comfort
1-5	1	22502525-110M	SEDEO Stabilizer Seat SW50 SD50 Comfort
1-5	1	22502525-116M	SEDEO Stabilizer Seat SW50 SD56 Comfort
1-5	1	22502525-111M	SEDEO Stabilizer Seat SW54 SD50 Comfort
1-5	1	22502525-117M	SEDEO Stabilizer Seat SW54 SD56 Comfort
1-5	1	22502512-009M	SEDEO Seat pan 5 cm SW42 SD50 Sellaskin
1-5	1	22502512-018M	SEDEO Seat pan 5 cm SW42 SD56 Sellaskin
1-5	1	22502512-011M	SEDEO Seat pan 5 cm SW46 SD50 Sellaskin
1-5	1	22502512-020M	SEDEO Seat pan 5 cm SW46 SD56 Sellaskin
1-5	1	22502512-013M	SEDEO Seat pan 5 cm SW50 SD50 Sellaskin

Continued from **14 Sedeo Pro / Seat cushion**

Pos	Qty	Article number	Description
1-5	1	22502512-022M	SEDEO Seat pan 5 cm SW50 SD56 Sellaskin
1-5	1	22502512-014M	SEDEO Seat pan 5 cm SW54 SD50 Sellaskin
1-5	1	22502512-023M	SEDEO Seat pan 5 cm SW54 SD56 Sellaskin
1-5	1	22502512-102M	SEDEO Seat pan 7,5 cm SW42 SD50 Sellaskin
1-5	1	22502512-108M	SEDEO Seat pan 7,5 cm SW42 SD56 Sellaskin
1-5	1	22502512-103M	SEDEO Seat pan 7,5 cm SW46 SD50 Sellaskin
1-5	1	22502512-109M	SEDEO Seat pan 7,5 cm SW46 SD56 Sellaskin
1-5	1	22502512-104M	SEDEO Seat pan 7,5 cm SW50 SD50 Sellaskin
1-5	1	22502512-110M	SEDEO Seat pan 7,5 cm SW50 SD56 Sellaskin
1-5	1	22502512-105M	SEDEO Seat pan 7,5 cm SW54 SD50 Sellaskin
1-5	1	22502512-111M	SEDEO Seat pan 7,5 cm SW54 SD56 Sellaskin
1-5	1	22502513-009M	SEDEO Seat Board SW42 SD50 Sellaskin
1-5	1	22502513-018M	SEDEO Seat Board SW42 SD56 Sellaskin
1-5	1	22502513-011M	SEDEO Seat Board SW46 SD50 Sellaskin
1-5	1	22502513-020M	SEDEO Seat Board SW46 SD56 Sellaskin
1-5	1	22502513-013M	SEDEO Seat Board SW50 SD50 Sellaskin
1-5	1	22502513-022M	SEDEO Seat Board SW50 SD56 Sellaskin
1-5	1	22502513-014M	SEDEO Seat Board SW54 SD50 Sellaskin
1-5	1	22502513-023M	SEDEO Seat Board SW54 SD56 Sellaskin
-	-	9008228	Front pan 5 cm for pan seat, SW 42 cm
-	-	9008229	Front pan 5 cm for pan seat, SW 46 cm
-	-	9008230	Front pan 5 cm for pan seat, SW 50 cm
-	-	9008231	Front pan 5 cm for pan seat, SW 54 cm
-	-	9008260	Front pan 7,5 cm for pan seat, SW 42 cm
-	-	9008261	Front pan 7,5 cm for pan seat, SW 46 cm
-	-	9008262	Front pan 7,5 cm for pan seat, SW 50 cm
-	-	9008263	Front pan 7,5 cm for pan seat, SW 54 cm
-	-	9007089	Rear pan 5 cm for pan seat
-	-	1015093	Sellaskin Sedeo Pro (per meter)
-	-	1015091	Comfort fabric (per meter)
-	-	00004.0291	Black Stretch Rubber (per meter)

15 Sedeo Pro / Backrest

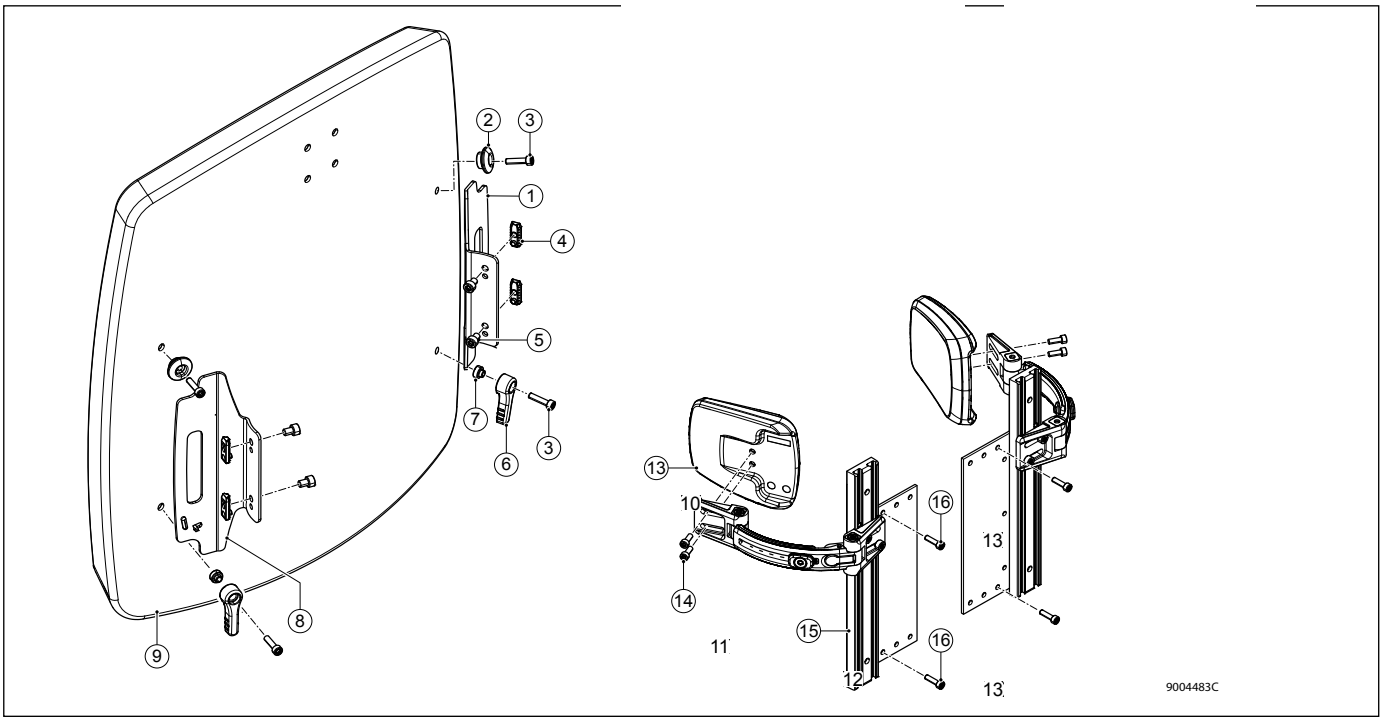

Pos	Qty	Article number	Description
1,4,5,8	1	1010888	Backrest mounting plate, set
2,3,6,7	1	1010889	Backrest mounting, set
3	4	1015344	Torx countersunk head screw M5x25 T30 (100 pieces)
4	4	1010881	Clamp nut (10 pieces)
5	2	1015330	Torx socket head screw M6x8 din7984T Precote 85 (100 pieces)
10,13	2	1010980	Thoracic support cushion
10-13	1	1010979	Thoracic support set complete
14	4	1015332	Torx socket head screw M6x12 iso14579 Precote 85 (100 pieces)
12,13	1	1016549	Thoracic support mounting, right
12,13	1	1016550	Thoracic support mounting, left
12,13	1	1010978	Thoracic support mounting, set
13	4	-	Round head screw with Philips head M5x30 din7985
2,3,6,7,9	1	22503502-002M	SEDEOPro Back Profiled BH50 SW42 Incontinence
2,3,6,7,9	1	22503502-008M	SEDEOPro Back Profiled BH56 SW42 Incontinence
2,3,6,7,9	1	22503502-003M	SEDEOPro Back Profiled BH50 SW46 Incontinence
2,3,6,7,9	1	22503502-009M	SEDEOPro Back Profiled BH56 SW46 Incontinence
2,3,6,7,9	1	22503502-004M	SEDEOPro Back Profiled BH50 SW50 Incontinence
2,3,6,7,9	1	22503502-010M	SEDEOPro Back Profiled BH56 SW50 Incontinence
2,3,6,7,9	1	22503502-005M	SEDEOPro Back Profiled BH50 SW54 Incontinence
2,3,6,7,9	1	22503502-011M	SEDEOPro Back Profiled BH56 SW54 Incontinence
2,3,6,7,9	1	22503502-102M	SEDEOPro Back Profiled BH50 SW42 Comfort
2,3,6,7,9	1	22503502-108M	SEDEOPro Back Profiled BH56 SW42 Comfort
2,3,6,7,9	1	22503502-103M	SEDEOPro Back Profiled BH50 SW46 Comfort
2,3,6,7,9	1	22503502-109M	SEDEOPro Back Profiled BH56 SW46 Comfort
2,3,6,7,9	1	22503502-104M	SEDEOPro Back Profiled BH50 SW50 Comfort
2,3,6,7,9	1	22503502-110M	SEDEOPro Back Profiled BH56 SW50 Comfort
2,3,6,7,9	1	22503502-105M	SEDEOPro Back Profiled BH50 SW54 Comfort
2,3,6,7,9	1	22503502-111M	SEDEOPro Back Profiled BH56 SW54 Comfort
2,3,6,7,9	1	22503570-002M	SEDEOPro Back Profiled with straps BH50 SW42 Incontinence
2,3,6,7,9	1	22503570-008M	SEDEOPro Back Profiled with straps BH56 SW42 Incontinence
2,3,6,7,9	1	22503570-003M	SEDEOPro Back Profiled with straps BH50 SW46 Incontinence
2,3,6,7,9	1	22503570-009M	SEDEOPro Back Profiled with straps BH56 SW46 Incontinence
2,3,6,7,9	1	22503570-004M	SEDEOPro Back Profiled with straps BH50 SW50 Incontinence
2,3,6,7,9	1	22503570-010M	SEDEOPro Back Profiled with straps BH56 SW50 Incontinence
2,3,6,7,9	1	22503570-005M	SEDEOPro Back Profiled with straps BH50 SW54 Incontinence

Continued from **15 Sedeo Pro / Backrest**

Pos	Qty	Article number	Description
2,3,6,7,9	1	22503570-011M	SEDEOPro Back Profiled with straps BH56 SW54 Incontinence
2,3,6,7,9	1	22503570-102M	SEDEOPro Back Profiled with straps BH50 SW42 Comfort
2,3,6,7,9	1	22503570-108M	SEDEOPro Back Profiled with straps BH56 SW42 Comfort
2,3,6,7,9	1	22503570-103M	SEDEOPro Back Profiled with straps BH50 SW46 Comfort
2,3,6,7,9	1	22503570-109M	SEDEOPro Back Profiled with straps BH56 SW46 Comfort
2,3,6,7,9	1	22503570-104M	SEDEOPro Back Profiled with straps BH50 SW50 Comfort
2,3,6,7,9	1	22503570-110M	SEDEOPro Back Profiled with straps BH56 SW50 Comfort
2,3,6,7,9	1	22503570-105M	SEDEOPro Back Profiled with straps BH50 SW54 Comfort
2,3,6,7,9	1	22503570-111M	SEDEOPro Back Profiled with straps BH56 SW54 Comfort
2,3,6,7,9	1	22503575-002M	SEDEOPro Back DC Passive BH50 SW42 Incontinence
2,3,6,7,9	1	22503575-008M	SEDEOPro Back DC Passive BH56 SW42 Incontinence
2,3,6,7,9	1	22503575-003M	SEDEOPro Back DC Passive BH50 SW46 Incontinence
2,3,6,7,9	1	22503575-009M	SEDEOPro Back DC Passive BH56 SW46 Incontinence
2,3,6,7,9	1	22503575-004M	SEDEOPro Back DC Passive BH50 SW50 Incontinence
2,3,6,7,9	1	22503575-010M	SEDEOPro Back DC Passive BH56 SW50 Incontinence
2,3,6,7,9	1	22503575-005M	SEDEOPro Back DC Passive BH50 SW54 Incontinence
2,3,6,7,9	1	22503575-011M	SEDEOPro Back DC Passive BH56 SW54 Incontinence
2,3,6,7,9	1	22503575-102M	SEDEOPro Back DC Passive BH50 SW42 Comfort
2,3,6,7,9	1	22503575-108M	SEDEOPro Back DC Passive BH56 SW42 Comfort
2,3,6,7,9	1	22503575-103M	SEDEOPro Back DC Passive BH50 SW46 Comfort
2,3,6,7,9	1	22503575-109M	SEDEOPro Back DC Passive BH56 SW46 Comfort
2,3,6,7,9	1	22503575-104M	SEDEOPro Back DC Passive BH50 SW50 Comfort
2,3,6,7,9	1	22503575-110M	SEDEOPro Back DC Passive BH56 SW50 Comfort
2,3,6,7,9	1	22503575-105M	SEDEOPro Back DC Passive BH50 SW54 Comfort
2,3,6,7,9	1	22503575-111M	SEDEOPro Back DC Passive BH56 SW54 Comfort
2,3,6,7,9	1	1012228	Backrest with adjustable straps passive 42 x 50 Stretch Rubber
2,3,6,7,9	1	1012229	Backrest with adjustable straps passive 42 x 56 Stretch Rubber
2,3,6,7,9	1	1012230	Backrest with adjustable straps passive 46 x 50 Stretch Rubber
2,3,6,7,9	1	1012231	Backrest with adjustable straps passive 46 x 56 Stretch Rubber
2,3,6,7,9	1	1012232	Backrest with adjustable straps passive 50 x 50 Stretch Rubber
2,3,6,7,9	1	1012233	Backrest with adjustable straps passive 50 x 56 Stretch Rubber
2,3,6,7,9	1	1012234	Backrest with adjustable straps passive 54 x 50 Stretch Rubber
2,3,6,7,9	1	1012235	Backrest with adjustable straps passive 54 x 56 Stretch Rubber
2,3,6,7,9	1	1012172	Backrest with adjustable straps passive 42 x 50 Comfort
2,3,6,7,9	1	1012173	Backrest with adjustable straps passive 42 x 56 Comfort
2,3,6,7,9	1	1012174	Backrest with adjustable straps passive 46 x 50 Comfort
2,3,6,7,9	1	1012175	Backrest with adjustable straps passive 46 x 56 Comfort
2,3,6,7,9	1	1012176	Backrest with adjustable straps passive 50 x 50 Comfort
2,3,6,7,9	1	1012177	Backrest with adjustable straps passive 50 x 56 Comfort
2,3,6,7,9	1	1012178	Backrest with adjustable straps passive 54 x 50 Comfort
2,3,6,7,9	1	1012179	Backrest with adjustable straps passive 54 x 56 Comfort
2,3,6,7,9	1	1012236	Backrest with adjustable straps active 42 x 50 Stretch Rubber
2,3,6,7,9	1	1012237	Backrest with adjustable straps active 42 x 56 Stretch Rubber
2,3,6,7,9	1	1012238	Backrest with adjustable straps active 46 x 50 Stretch Rubber
2,3,6,7,9	1	1012239	Backrest with adjustable straps active 46 x 56 Stretch Rubber
2,3,6,7,9	1	1012240	Backrest with adjustable straps active 50 x 50 Stretch Rubber
2,3,6,7,9	1	1012241	Backrest with adjustable straps active 50 x 56 Stretch Rubber
2,3,6,7,9	1	1012242	Backrest with adjustable straps active 54 x 50 Stretch Rubber
2,3,6,7,9	1	1012243	Backrest with adjustable straps active 54 x 56 Stretch Rubber
2,3,6,7,9	1	1012180	Backrest with adjustable straps active 42 x 50 Comfort
2,3,6,7,9	1	1012181	Backrest with adjustable straps active 42 x 56 Comfort
2,3,6,7,9	1	1012182	Backrest with adjustable straps active 46 x 50 Comfort
2,3,6,7,9	1	1012183	Backrest with adjustable straps active 46 x 56 Comfort
2,3,6,7,9	1	1012184	Backrest with adjustable straps active 50 x 50 Comfort
2,3,6,7,9	1	1012185	Backrest with adjustable straps active 50 x 56 Comfort
2,3,6,7,9	1	1012186	Backrest with adjustable straps active 54 x 50 Comfort
2,3,6,7,9	1	1012187	Backrest with adjustable straps active 54 x 56 Comfort
-	-	1015093	Sellaskin Sedeo Pro (per meter)
-	-	1015091	Comfort fabric (per meter)
-	-	00004.0291	Black Stretch Rubber (per meter)

16 Sedeo Pro / Backrest flexible

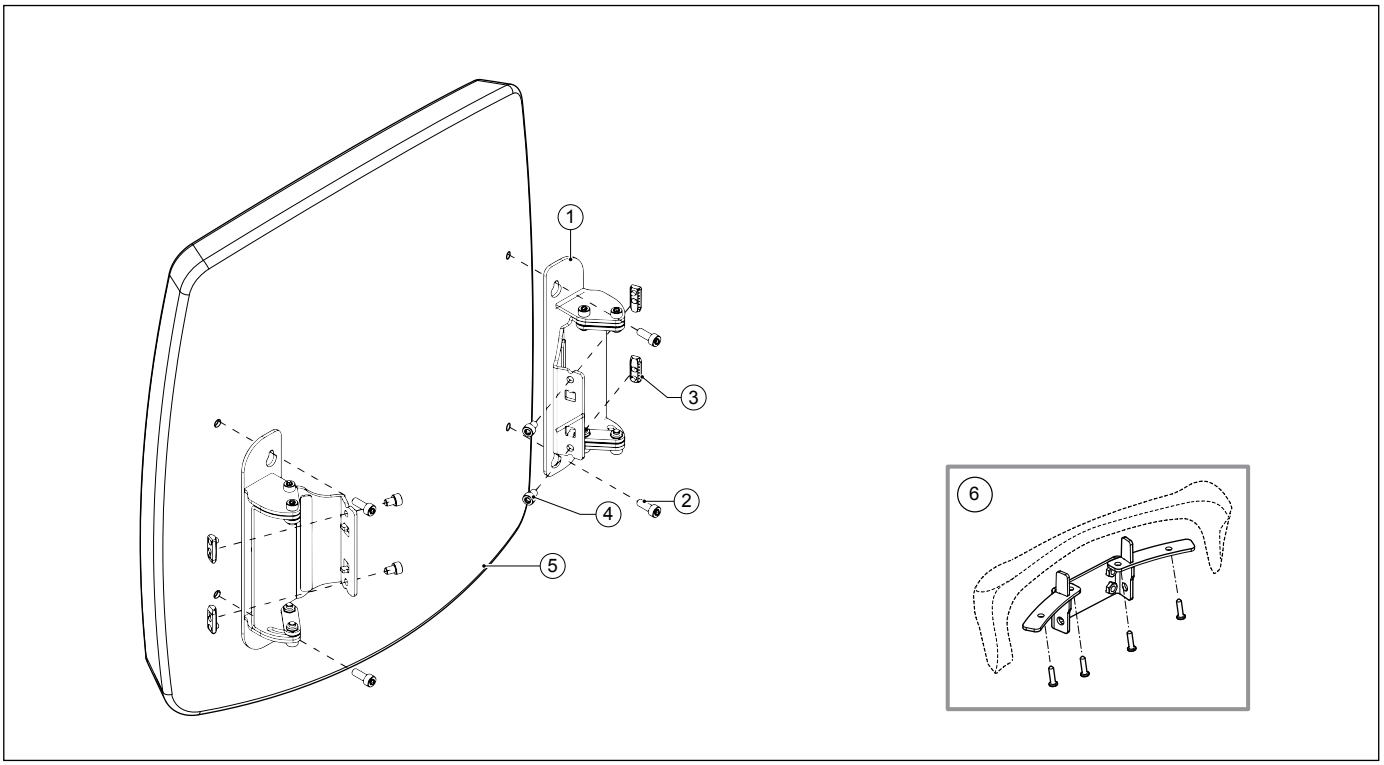

Pos	Qty	Article number	Description
1,3,4	1	1010986	Angle adjustable backrest mounting, set
2	4	1015344	Torx countersunk head screw M5x25 T30 (100 pieces)
4	4	1015330	Torx socket head screw M6x8 din7984T Precote 85 (100 pieces)
6	1	1017704	Headrest mounting bracket for flexible backrest >2014
2,5	1	22503537-002M	SEDEOPro Back Flex Passive BH50 SW42 Incontinence
2,5	1	22503537-008M	SEDEOPro Back Flex Passive BH56 SW42 Incontinence
2,5	1	22503537-003M	SEDEOPro Back Flex Passive BH50 SW46 Incontinence
2,5	1	22503537-009M	SEDEOPro Back Flex Passive BH56 SW46 Incontinence
2,5	1	22503537-004M	SEDEOPro Back Flex Passive BH50 SW50 Incontinence
2,5	1	22503537-010M	SEDEOPro Back Flex Passive BH56 SW50 Incontinence
2,5	1	22503537-005M	SEDEOPro Back Flex Passive BH50 SW54 Incontinence
2,5	1	22503537-011M	SEDEOPro Back Flex Passive BH56 SW54 Incontinence
2,5	1	22503537-102M	SEDEOPro Back Flex Passive BH50 SW42 Comfort
2,5	1	22503537-108M	SEDEOPro Back Flex Passive BH56 SW42 Comfort
2,5	1	22503537-103M	SEDEOPro Back Flex Passive BH50 SW46 Comfort
2,5	1	22503537-109M	SEDEOPro Back Flex Passive BH56 SW46 Comfort
2,5	1	22503537-104M	SEDEOPro Back Flex Passive BH50 SW50 Comfort
2,5	1	22503537-110M	SEDEOPro Back Flex Passive BH56 SW50 Comfort
2,5	1	22503537-105M	SEDEOPro Back Flex Passive BH50 SW54 Comfort
2,5	1	22503537-111M	SEDEOPro Back Flex Passive BH56 SW54 Comfort
2,5	1	22503536-002M	SEDEO Pro Back Flex Active BH44 SW42 back Incontinence
2,5	1	22503536-008M	SEDEOPro Back Flex Active BH50 SW42 back Incontinence
2,5	1	22503536-014M	SEDEOPro Back Flex Active BH56 SW42 back Incontinence
2,5	1	22503536-003M	SEDEO Pro Back Flex Active BH44 SW46 back Incontinence
2,5	1	22503536-009M	SEDEOPro Back Flex Active BH50 SW46 back Incontinence
2,5	1	22503536-015M	SEDEOPro Back Flex Active BH56 SW46 back Incontinence
2,5	1	22503536-004M	SEDEO Pro Back Flex Active BH44 SW50 back Incontinence
2,5	1	22503536-010M	SEDEOPro Back Flex Active BH50 SW50 back Incontinence
2,5	1	22503536-016M	SEDEOPro Back Flex Active BH56 SW50 back Incontinence
2,5	1	22503536-005M	SEDEO Pro Back Flex Active BH44 SW54 back Incontinence
2,5	1	22503536-011M	SEDEOPro Back Flex Active BH50 SW54 back Incontinence
2,5	1	22503536-017M	SEDEOPro Back Flex Active BH56 SW54 back Incontinence

Continued from **16 Sedeo Pro / Backrest flexible**

Pos	Qty	Article no	Description
2,5	1	22503536-102M	SEDEO Pro Back Flex Active BH44 SW42 back Comfort
2,5	1	22503536-108M	SEDEOPro Back Flex Active BH50 SW42 back Comfort
2,5	1	22503536-114M	SEDEOPro Back Flex Active BH56 SW42 back Comfort
2,5	1	22503536-103M	SEDEO Pro Back Flex Active BH44 SW46 back Comfort
2,5	1	22503536-109M	SEDEOPro Back Flex Active BH50 SW46 back Comfort
2,5	1	22503536-115M	SEDEOPro Back Flex Active BH56 SW46 back Comfort
2,5	1	22503536-104M	SEDEO Pro Back Flex Active BH44 SW50 back Comfort
2,5	1	22503536-110M	SEDEOPro Back Flex Active BH50 SW50 back Comfort
2,5	1	22503536-116M	SEDEOPro Back Flex Active BH56 SW50 back Comfort
2,5	1	22503536-105M	SEDEO Pro Back Flex Active BH44 SW54 back Comfort
2,5	1	22503536-111M	SEDEOPro Back Flex Active BH50 SW54 back Comfort
2,5	1	22503536-117M	SEDEOPro Back Flex Active BH56 SW54 back Comfort
2,5	1	22503516-002M	SEDEOPro Back Flex Active XD BH44 SW42 Incontinencetinence
2,5	1	22503516-008M	SEDEOPro Back Flex Active XD BH50 SW42 Incontinencetinence
2,5	1	22503516-014M	SEDEOPro Back Flex Active XD BH56 SW42 Incontinencetinence
2,5	1	22503516-003M	SEDEOPro Back Flex Active XD BH44 SW46 Incontinencetinence
2,5	1	22503516-009M	SEDEOPro Back Flex Active XD BH50 SW46 Incontinencetinence
2,5	1	22503516-015M	SEDEOPro Back Flex Active XD BH56 SW46 Incontinencetinence
2,5	1	22503516-004M	SEDEOPro Back Flex Active XD BH44 SW50 Incontinencetinence
2,5	1	22503516-010M	SEDEOPro Back Flex Active XD BH50 SW50 Incontinencetinence
2,5	1	22503516-016M	SEDEOPro Back Flex Active XD BH56 SW50 Incontinencetinence
2,5	1	22503516-005M	SEDEOPro Back Flex Active XD BH44 SW54 Incontinencetinence
2,5	1	22503516-011M	SEDEOPro Back Flex Active XD BH50 SW54 Incontinencetinence
2,5	1	22503516-017M	SEDEOPro Back Flex Active XD BH56 SW54 Incontinencetinence
2,5	1	22503516-102M	SEDEOPro Back Flex Active XD BH44 SW42 Comfort
2,5	1	22503516-108M	SEDEOPro Back Flex Active XD BH50 SW42 Comfort
2,5	1	22503516-114M	SEDEOPro Back Flex Active XD BH56 SW42 Comfort
2,5	1	22503516-103M	SEDEOPro Back Flex Active XD BH44 SW46 Comfort
2,5	1	22503516-109M	SEDEOPro Back Flex Active XD BH50 SW46 Comfort
2,5	1	22503516-115M	SEDEOPro Back Flex Active XD BH56 SW46 Comfort
2,5	1	22503516-104M	SEDEOPro Back Flex Active XD BH44 SW50 Comfort
2,5	1	22503516-110M	SEDEOPro Back Flex Active XD BH50 SW50 Comfort
2,5	1	22503516-116M	SEDEOPro Back Flex Active XD BH56 SW50 Comfort
2,5	1	22503516-105M	SEDEOPro Back Flex Active XD BH44 SW54 Comfort
2,5	1	22503516-111M	SEDEOPro Back Flex Active XD BH50 SW54 Comfort
2,5	1	22503516-117M	SEDEOPro Back Flex Active XD BH56 SW54 Comfort
-	-	1015093	Sellaskin Sedeo Pro (per meter)
-	-	1015091	Comfort fabric (per meter)
-	-	00004.0291	Black Stretch rubber (per meter)

17 Sedeo Original / Mounting bracket for legrest

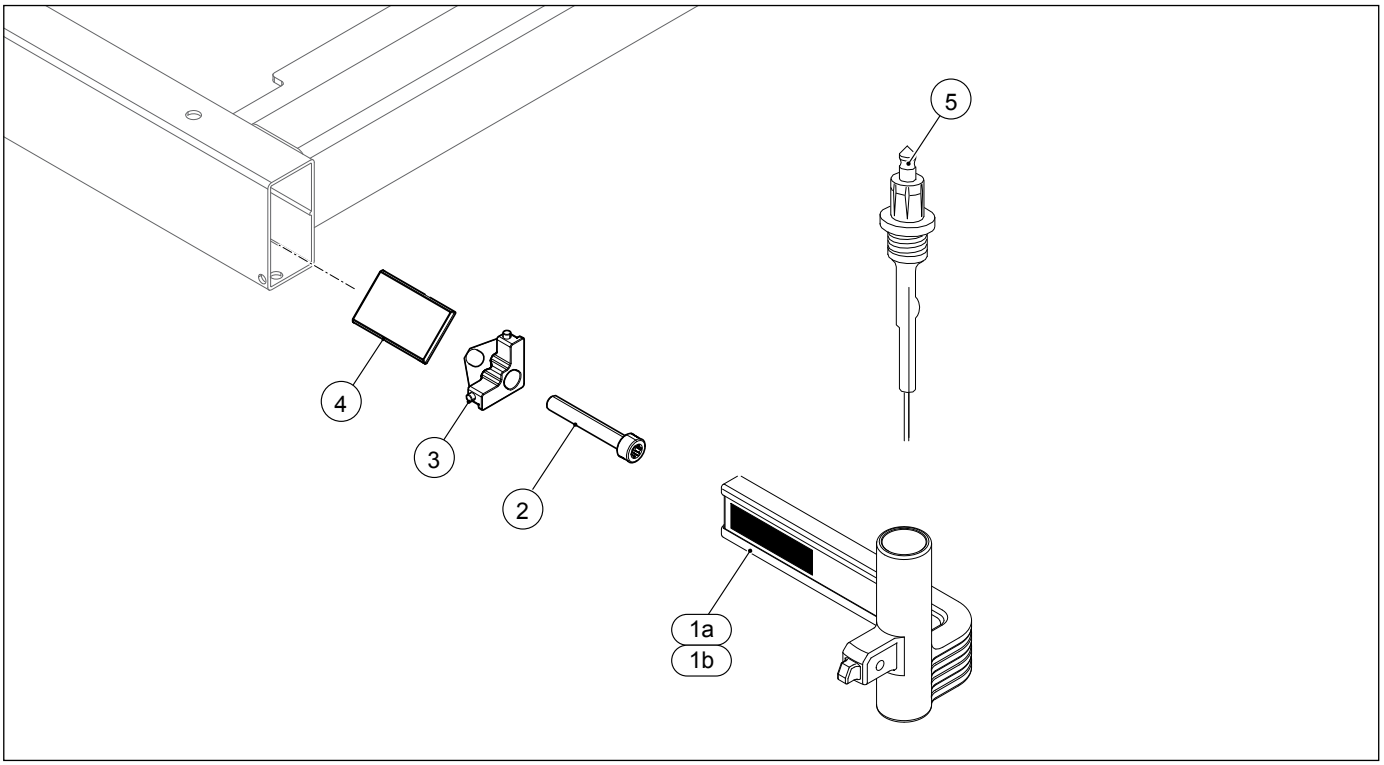

Pos	Qty	Article number	Description
1a	1	9001156	Legrest holder right
1b	1	9001155	Legrest holder left
2	2	1015338	Torx socket head screw M6x50 iso 14579 (100 pieces)
2-4	1	1010873	Legrest clamp, set
5	2	9002923	Legrest harness

18 Mounting bracket for heavy duty legrest

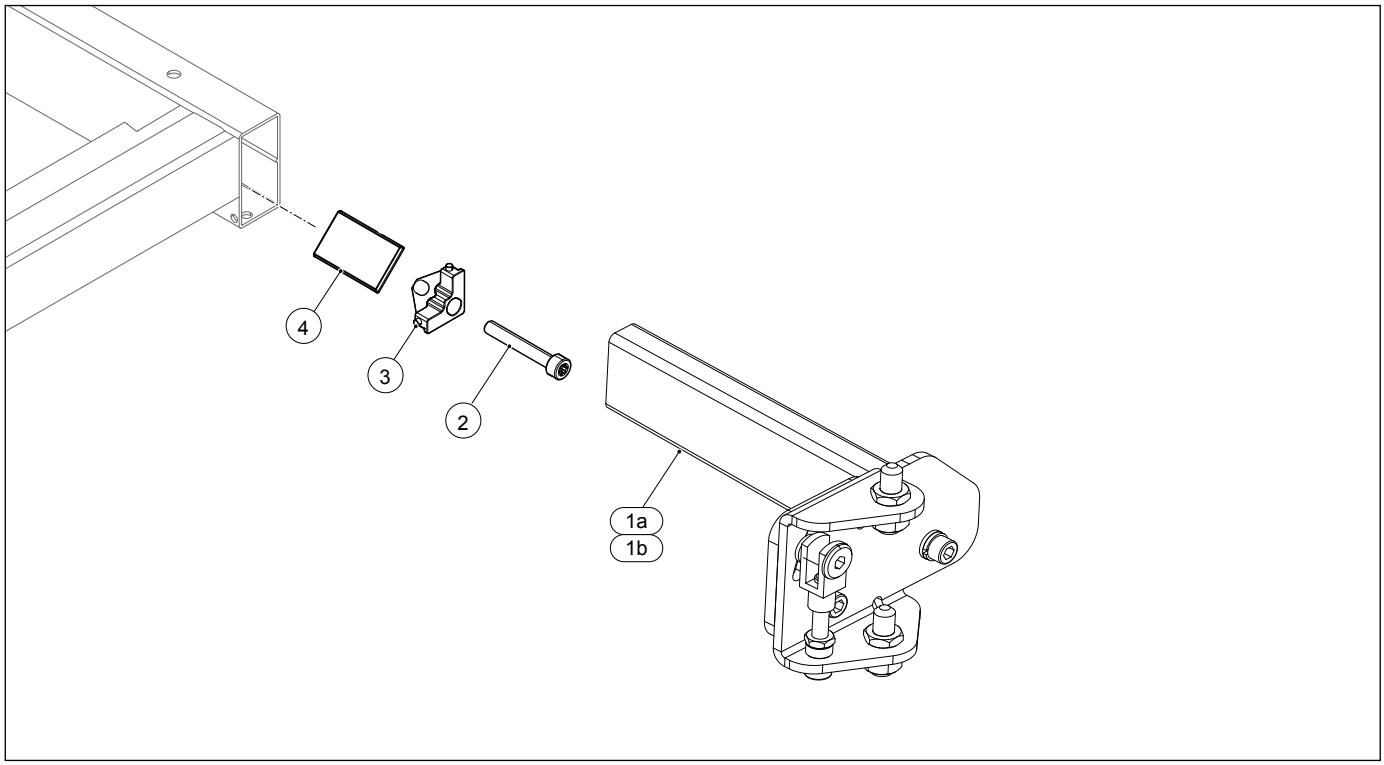

Pos	Qty	Article number	Description
1a,2-4	1	1016567	Legrest insert tube heavy duty, right
1b,2-4	1	1016568	Legrest insert tube heavy duty, left
1-4	1	1016569	Legrest insert tube heavy duty, set
2-4	2	1010873	Legrest clamp, set

19 Standard legrest

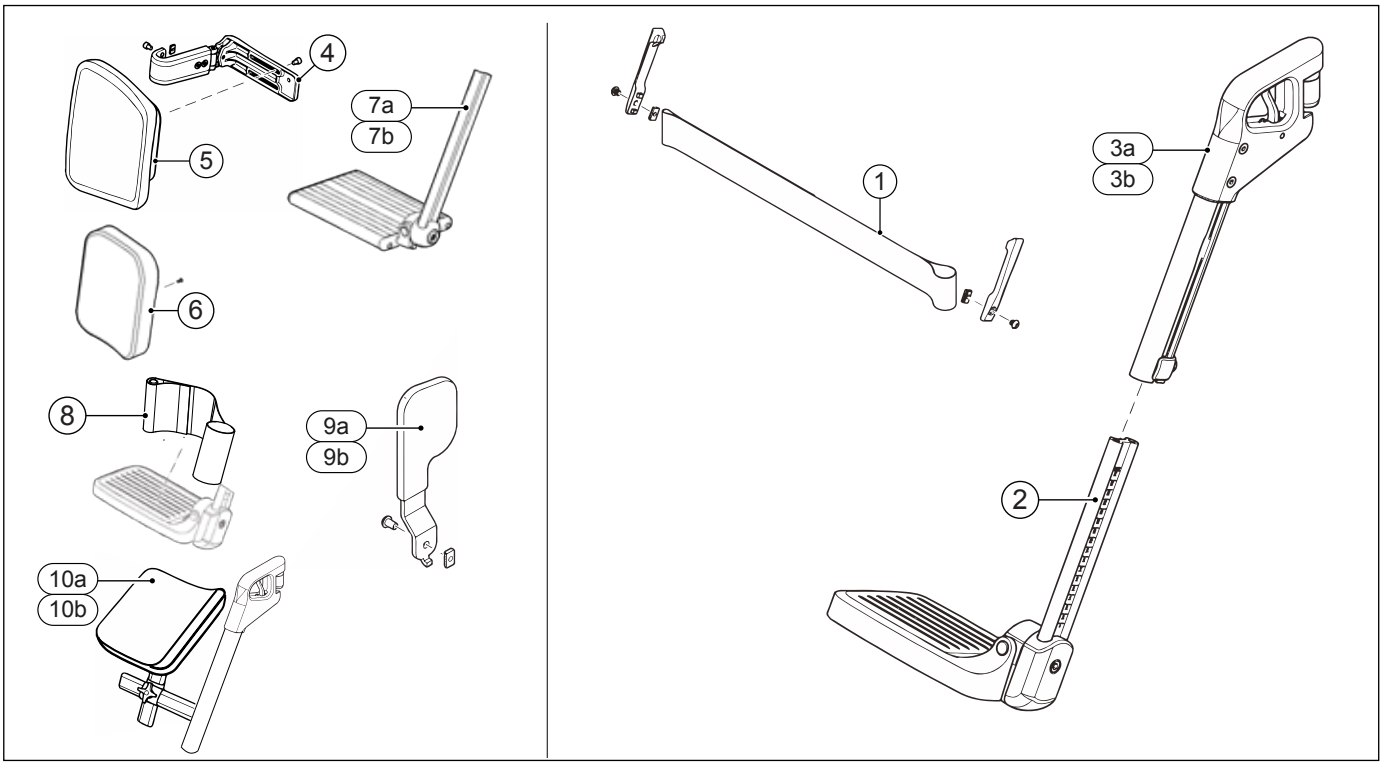

Pos	Qty	Article number	Description
1,2,3a,3b	1	22505225-001	Standard legrest set with calfstrap SW 42-46
1	1	22505030-001	Calf strap, incl. mounting set
1	1	22505030-002	Calf strap extended SW 54, incl. mounting set
2,3a	1	22505220-012	Standard legrest RHS SW 42-46
2,3b	1	22505220-002	Standard legrest LHS SW 42-46
2,3a	1	22505220-013	Standard legrest RHS SW 48-52
2,3b	1	22505220-003	Standard legrest LHS SW 48-52
2,3a	1	22505220-014	Standard legrest RHS SW 54-56
2,3b	1	22505220-004	Standard legrest LHS SW 54-56
2	2	22505217-002	Footplate for SW 42-46 L=R (210 mm breed aan onderzijde gemeten)
2	2	22505217-003	Footplate for SW 50 L=R (230 mm breed aan onderzijde gemeten)
2	2	22505217-004	Footplate for SW 54 L=R (250 mm breed aan onderzijde gemeten)
3a	1	22505215-002	Standard legrest upper part RHS
3b	1	22505215-001	Standard legrest upper part LHS
4	2	9010160	Calf plate mounting bracket
4-5	2	9010430	Calf plate PU with depth adjustable mounting bracket
5	2	22505114-004	Calf plate PU
6	2	220.00121.505	Calfplate, comfort, 46-50, black Sellaskin
6	2	220.00141.505	Calfplate, comfort, 38-42, black Sellaskin
8	2	90009061	Heel Loop L=R
9a	1	22509129-002	Knee cushion RHS, with mounting set
9b	1	22509129-001	Knee cushion LHS, with mounting set
10a	1	22505200-002	Amputation support swingaway RHS
10b	1	22505200-001	Amputation support swingaway LHS
-	1	1018303	Legrest clamping strip short (10 pieces)
-	1	1002599	Legrest inner extrusion 10 cm extended

20 Manually elevating legrest (for Sedeo Original manually elevating legrest see section 40)

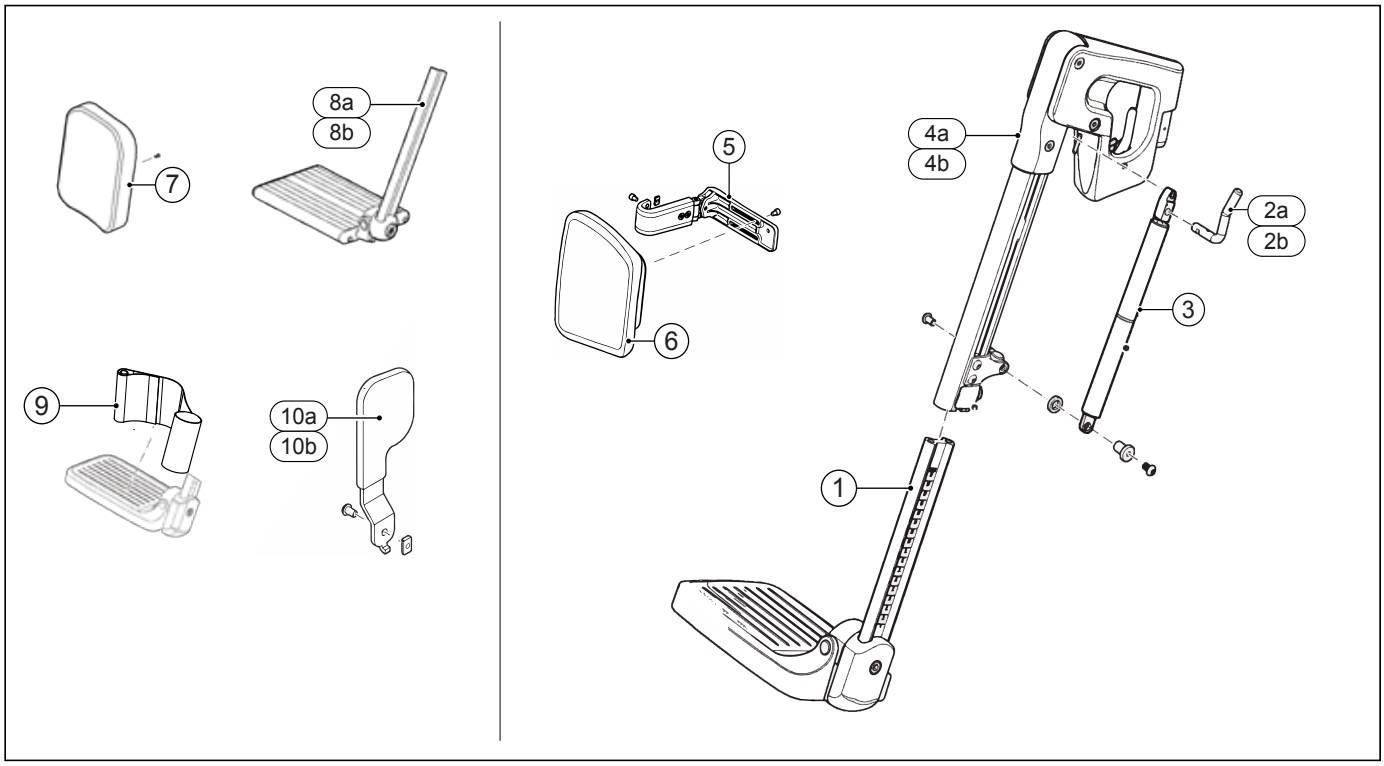

Pos	Qty	Article number	Description
1-6	1	22505225-002	Manually elevating legrest set with calfplates SW 42-46
1,2a,3,4a	1	22505221-012	Manually elevating legrest RHS SW 42-46 cm
1,2b,3,4b	1	22505221-002	Manually elevating legrest LHS SW 42-46 cm
1,2a,3,4a	1	22505221-004	Manually elevating legrest RHS SW 54 cm
1,2b,3,4b	1	22505221-003	Manually elevating legrest LHS SW 48-52 cm
1,2a,3,4a	1	22505221-013	Manually elevating legrest RHS SW 48-52 cm
1,2b,3,4b	1	22505221-014	Manually elevating legrest LHS SW 54-56 cm
1	2	22505217-002	Footplate for SW 42-46 L=R (210 mm breed aan onderzijde gemeten)
1	2	22505217-003	Footplate for SW 50 L=R (230 mm breed aan onderzijde gemeten)
1	2	22505217-004	Footplate for SW 54 L=R (250 mm breed aan onderzijde gemeten)
2a,3,4a	1	22505215-002	Manually elevating legrest upper part RHS
2b,3,4b	1	22505215-001	Manually elevating legrest upper part LHS
2a,3	1	3000561	Gas spring set, manually elevating legrest RHS
2b,3	1	3000560	Gas spring set, manually elevating legrest LHS
4a	1	22505242-002	Manually elevating legrest upper part RHS w/o gas strut
4b	1	22505242-001	Manually elevating legrest upper part LHS w/o gas strut
5	2	9010160	Calf plate mounting bracket
5,6	2	9010430	Calf plate PU with depth adjustable mounting bracket
6	2	22505114-004	Calf plate PU
7	2	220.00121.505	Calfplate, comfort, 46-50, black Sellaskin
7	2	220.00141.505	Calfplate, comfort, 38-42, black Sellaskin
7	2	22505114-005	Calfplate, 21 cm, black Sellaskin
7	2	22505114-006	Calfplate, 23 cm, black Sellaskin
7	2	22505114-007	Calfplate, 25 cm, black Sellaskin
9	2	90009061	Heel Loop L=R
10a	1	22509129-002	Knee cushion RHS, with mounting set
10b	1	22509129-001	Knee cushion LHS, with mounting set
-	1	1018303	Legrest clamping strip short (10 pieces)
-	1	1002599	Legrest inner extrusion 10 cm extended

21 Electrically elevating legrest (for Sedeo Original electrically elevating legrest see section 41)

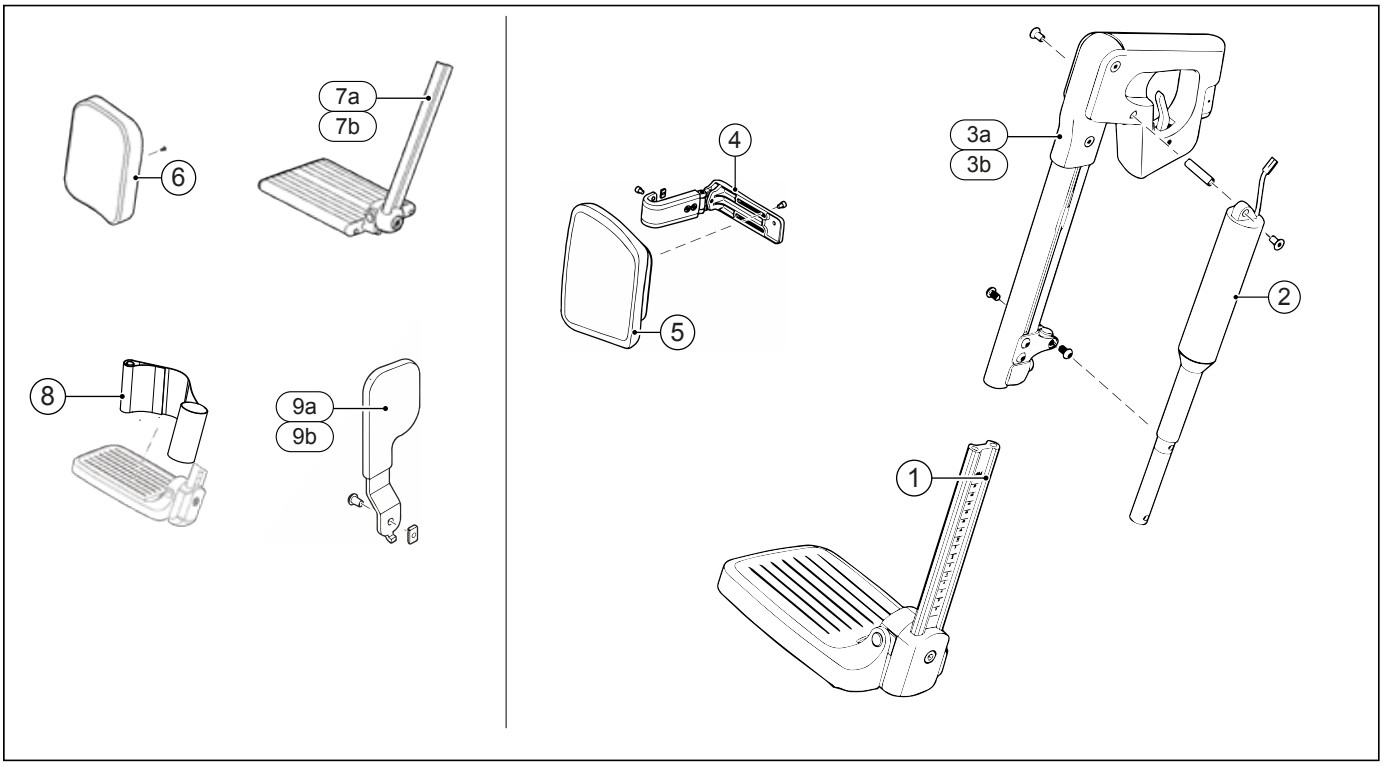

Pos	Qty	Article number	Description
1-5	1	22505225-003	Electrically elevating legrest set with calfplates SW 42-46
1,2,3a	1	22505222-012	Electrically elevating legrest RHS SW 42-46 cm
1,2,3b	1	22505222-002	Electrically elevating legrest LHS SW 42-46 cm
1,2,3b	1	22505222-013	Electrically elevating legrest RHS SW 48-52 cm
1,2,3a	1	22505222-003	Electrically elevating legrest LHS SW 48-52 cm
1,2,3a	1	22505222-014	Electrically elevating legrest RHS SW 54-56 cm
1,2,3b	1	22505222-004	Electrically elevating legrest LHS SW 54-56 cm
1	2	22505217-002	Footplate for SW 42-46 L=R (210 mm breed aan onderzijde gemeten)
1	2	22505217-003	Footplate for SW 50 L=R (230 mm breed aan onderzijde gemeten)
1	2	22505217-004	Footplate for SW 54 L=R (250 mm breed aan onderzijde gemeten)
2,3a	1	22505216-002	Electrically elevating legrest upper part RHS
2,3a	1	22505216-001	Electrically elevating legrest upper part LHS
3a	1	22505244-002	Powered legrest, swingaway, w/o actuator, RHS
3b	1	22505244-001	Powered legrest, swingaway, w/o actuator, LHS
2	2	6000808	Actuator for electrically elevating legrest
4	2	9010160	Calf plate mounting bracket
4,5	2	9010430	Calf plate PU with depth adjustable calf plate bracket
5	2	22505114-004	Calf plate PU
6	2	220.00121.505	Calfplate, comfort, 46-50, black Sellaskin
6	2	220.00141.505	Calfplate, comfort, 38-42, black Sellaskin
6	2	22505114-005	Calfplate, 21 cm, black Sellaskin
6	2	22505114-006	Calfplate, 23 cm, black Sellaskin
6	2	22505114-007	Calfplate, 25 cm, black Sellaskin
8	2	90009061	Heel Loop L=R
9a	1	22509129-002	Knee cushion RHS, with mounting set
9b	1	22509129-001	Knee cushion LHS, with mounting set
-	1	1018303	Legrest clamping strip short (10 pieces)
-	1	1002599	Legrest inner extrusion 10 cm extended
When supplying electric leg rests, also consider the corresponding actuator cables for the correct type of electronics			

22 Standard heavy duty legrest

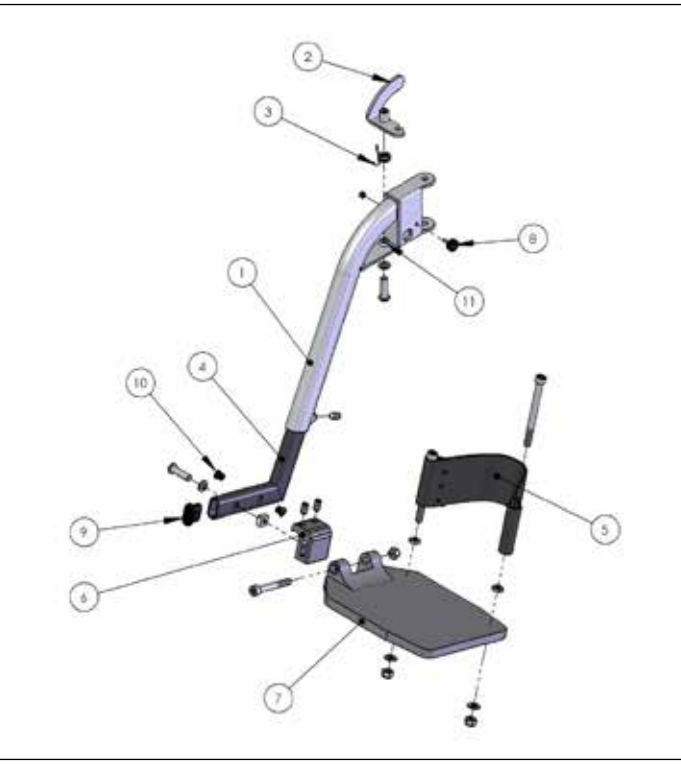

Pos	Qty	Article number	Description
8	1		Vibration damper, M4x13
9	1		Insert cap, flat, oval, 30x15
10	2		Decorative plug, 8.5x12x8
11	1		Bling rivet nut M8
-	1	BS10000L	Standard heavy duty legrest, left
-	1	BS10000R	Standard heavy duty legrest, right
-	1	BS10000	Standard heavy duty legrest, set

23 Comfort/ powered heavy duty legrest

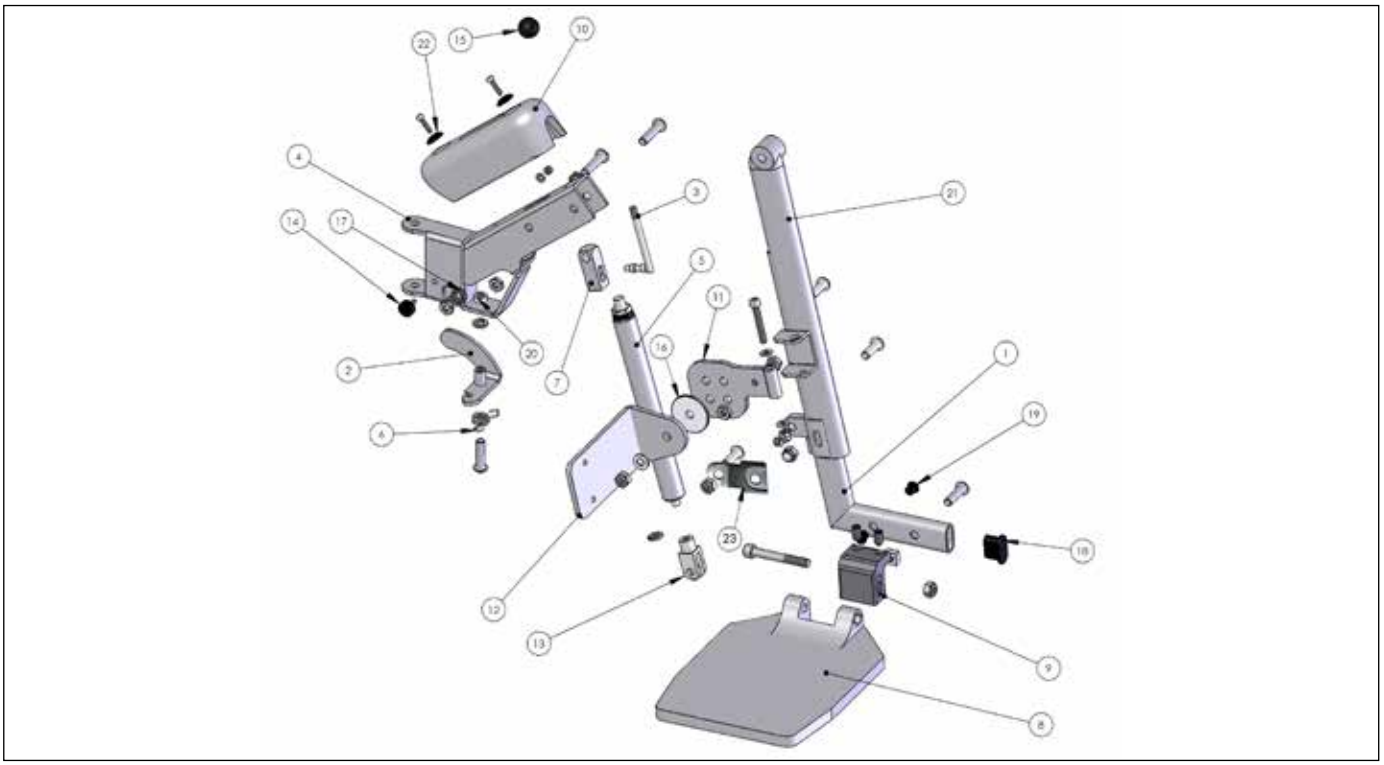

Pos	Qty	Article number	Description
13	1		Fork, M8x16
14	1		Vibration damper, M4x13
15	1		Ball knob M6 R/20 black (10 pieces)
16	1		Washer nylon 8,4x40 (10 pieces)
17	2		Fixing ring
18	1		Insert cap, flat, oval, 30x15
19	2		Decorative plug, 8.5x12x8
20	1		Bling rivet nut M8
2-7,10-17,20-22	1	1006911	Upper part, comfort leg rest, left
2-7,10-17,20-22	1	1006912	Upper part, comfort leg rest, right
22	2		Plastic Washer M5
23	2	9008039	Adapter set Comfort heavy duty legrest
-	1	BS10322L	Comfort heavy duty legrest, left
-	1	BS10322R	Comfort heavy duty legrest, right
-	1	BS10322	Comfort heavy duty legrest, set
-	1	15402	Calf plate 40 - 45 - 50 cm
-	1	BS10320	Powered heavy duty legrest, set
-	1	BS10320L	Powered heavy duty legrest, left
-	1	BS10320R	Powered heavy duty legrest, right

24 Sedeo Pro / Central legrest

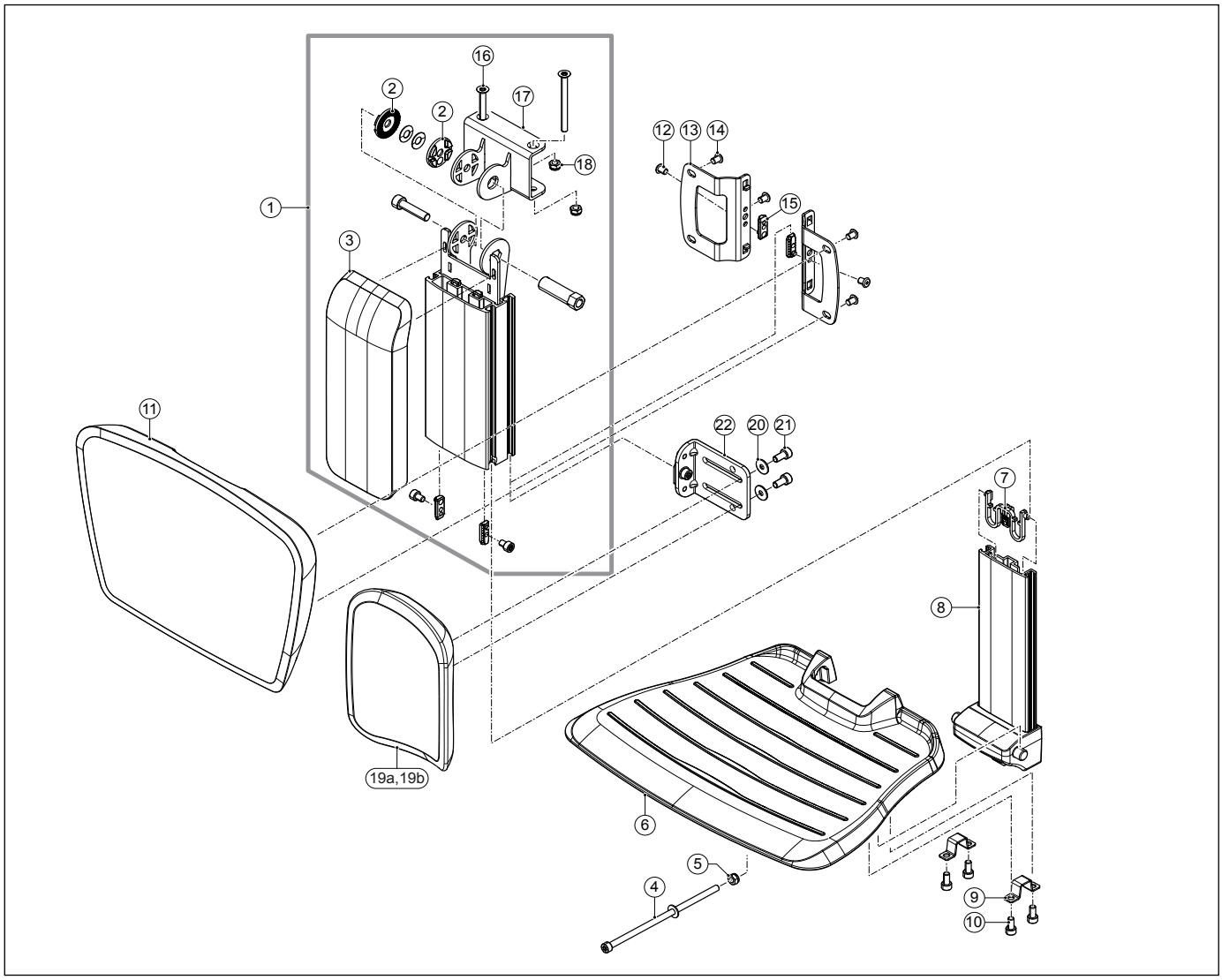

Pos	Qty	Article number	Desciption
1	1	1010941	Standard central legrest upper part
1-10,16-18	1	1011156	Standard central legrest
1-18	1	1011157	Standard central legrest with calf plate
2	1	1010943	Adjustment wheel, set
3	1	1010942	Central legrest cover
4	1	9003894	Angle adjustment bolt
5	1	-	Lock nut M6 D985/8/VZ
4-10	1	1010939	Central legrest lower part
4,5,6,9,10	1	1010940	Footplate
10	4	1015332	Torx socket head screw M6x12 iso14579 Precote 85 (100 pieces)
11-15	1	1010948	Central legrest calf plate with mouning set
11,14	1	1010947	Central legrest calf plate
12,13,15	1	1010946	Central legrest calf plate mounting, set
12	2	1015330	Torx socket head screw M6x8 din 7984T Precote 85 (100 pieces)
14	4	1015330	Torx socket head screw M6x8 din 7984T Precote 85 (100 pieces)
16-18	1	1016446	Standard central legrest mounting bracket
19a,20,21	2	1016775	Separate calf plate for central legrest (L=R)
19b,20,21	2	1016776	Separate calf plate side support for central legrest (L=R)
19a,20-22	2	9010234	Separate calf plate for central legrest with mounting set (L=R)
-	1	9007206	Centr. beensteun met gasveer SO tbv Sedeo Pro (excl. kuitplaat)
-	1	1015348	Centr. beensteun -50 mm met gasveer SO tbv Sedeo Pro (excl. kuitplaat)
-	1	1015349	Centr. bs met gasveer en spitsvoets verst. SO tbv Sedeo Pro (excl. kuitplaat)
-	1	1015350	Centr. bs met gasveer + spitsvoet verst. -50 mm met gasveer SO tbv Sedeo Pro (excl. kuitplaat)

25 Sedeo Pro / Manually elevating central legrest

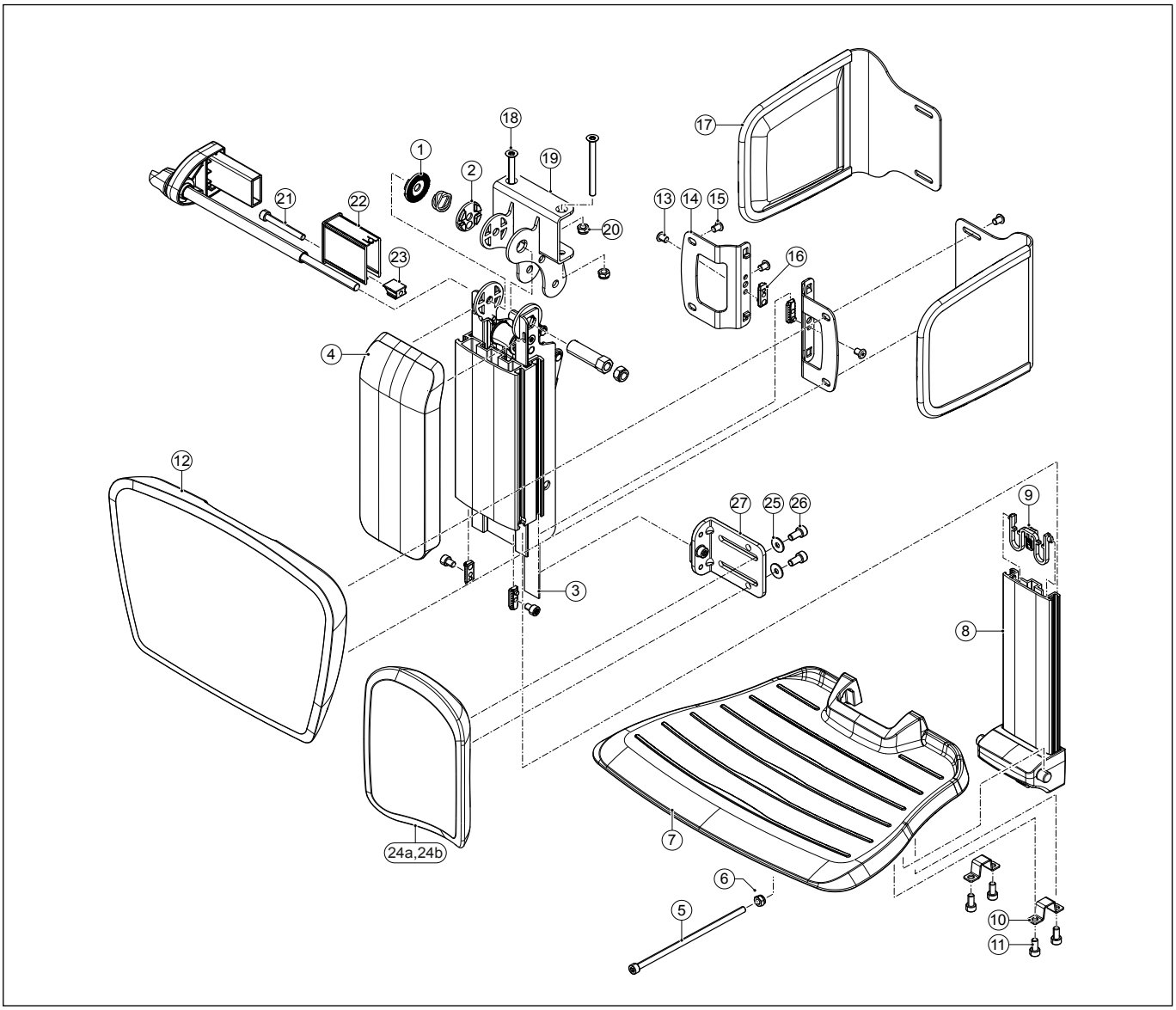

Pos	Qty	Article number	Desciption
1-4,18-23	1	1010944	Manually elevating central legrest upper part
1-11,18-23	1	1011158	Manually elevating central legrest
1-16,18-23	1	1011159	Manually elevating central legrest with calf plate
1,2	1	1010943	Adjustment wheel, set
3	1	1010945	Manually elevating central legrest strap
4	1	1010942	Central legrest cover
5	1	9003894	Angle adjustment bolt
6	1	-	Lock nut M6 D985/8/VZ
5-11	1	1010939	Central legrest lower part
5-7,10,11	1	1010940	Footplate
11	4	1015332	Torx socket head screw M6x12 iso14579 Precote 85 (100 pieces)
12-16	1	1010948	Central legrest calf plate with mouning set
12	1	1010947	Central legrest calf plate
13-16	1	1010946	Central legrest calf plate mounting set
13	2	1015330	Torx socket head screw M6x8 din 7984T Precote 85 (100 pieces)
15	4	1015330	Torx socket head screw M6x8 din 7984T Precote 85 (100 pieces)
17	1	1010981	Calf support side plate, set
18-20	1	1016447	Manually elevating central legrest mounting bracket
21-23	1	1017019	Front profile sleeve
24a,25,26	2	1016775	Separate calf plate for central legrest (L=R)
24b,25,26	2	1016776	Separate calf plate side support for central legrest (L=R)
24a,25-27	2	9010234	Separate calf plate for central legrest with mounting set (L=R)
-	1	1021433	Central legrest 100 mm higher mounted for Ibis Sedeo Pro i.c.w. Nuage

38 26 Sedeo Pro / Electrically elevating central legrest (only i.c.w. R-net/DX2)

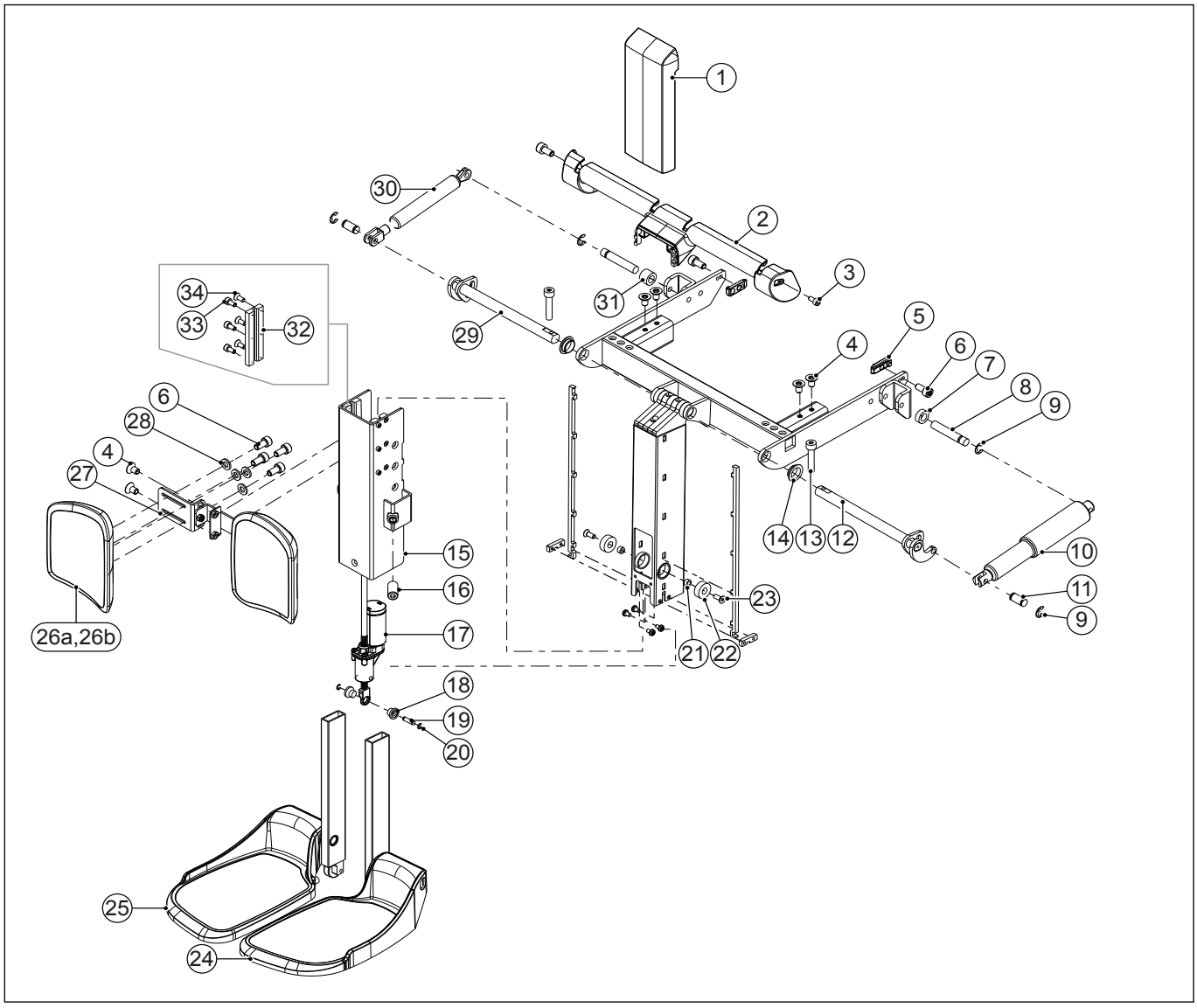

Pos	Qty	Article number	Desciption
1	1	1016763	Front cover
2.3	1	1016764	Axle cover
4	8	1016778	Torx countersunk socket head screw M6x10 ISO10642 (100 pieces)
4,6,26a,27,28	1	1016774	Calf plate bracket complete with calf plates
4,6,26b,27,28	1	1016782	Calf plate bracket complete with calf plates side support
4,27	1	1016777	Calf plate mounting bracket
5	2	1010881	Clamp nut profiles (10 pieces)
6	10	1015332	Torx socket head screw M6x12 ISO14579 (100 pieces)
6,26a,28	2	1016775	Separate calf plate for central legrest (L=R)
6,26b,28	2	1016776	Separate calf plate side support for central legrest (L=R)
7-11	1	1016768	Tilt actuator
8,9,11,30,31	1	1016767	Gas spring
12-14	1	1016766	Tilt actuator axle
13	2	1016780	Torx socket head screw M6x30 ISO14579 (100 pieces)
13,14,29	1	1016765	Gas spring axle
15,16,32-34	1	1016770	Outside profile
17-23	1	1016769	Height adjustment actuator
24	1	1016773	Footplate left
25	1	1016772	Footplate right
32-34	1	1016771	Slider bearing
1-25,29-34	1	1016781	Electrical elevating central legrest without calfplates
-	1	9012429	Service set guide wheels
When supplying electric leg rests, also consider the corresponding actuator cables for the correct type of electronics			

27 Sedeo Pro / Removable armrest

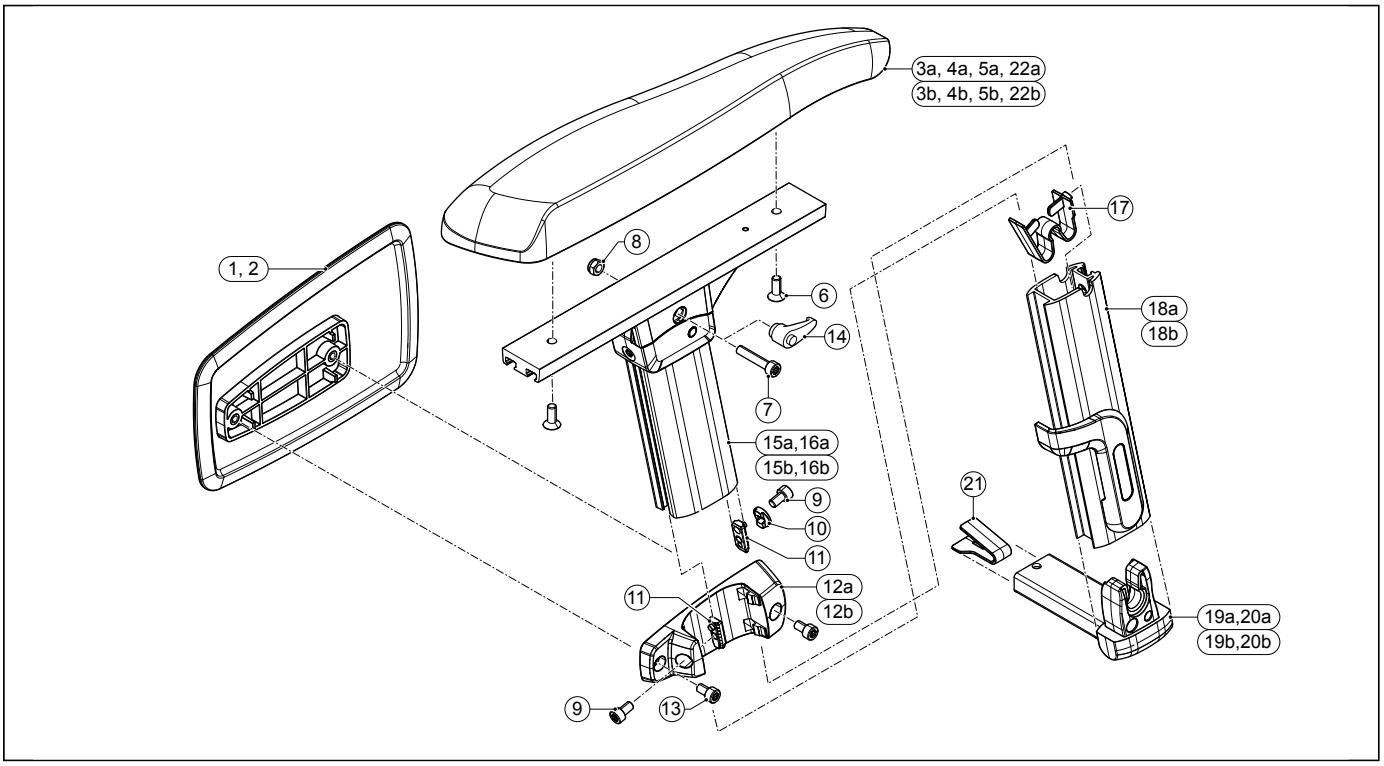

Pos	Qty	Article number	Description
1,13	2	1010911	Side plate PA
1,9,11,12a,12b,13	2	1016186	Side plate PA set incl mounting bracket
2,13	2	1010912	Side support PU
2,9,11,12a,12b,13	2	1016187	Side support PU, set, incl. mounting bracket
3a,6	1	1010905	Armrest pad 40 cm, right
3b,6	1	1010904	Armrest pad 40 cm, left
4a,6	1	1010907	Armrest pad narrow, 40 cm, right
4b,6	1	1010906	Armrest pad narrow, 40 cm, left
5a,6	1	1010908	Armrest pad 30 cm, right
5b,6	1	1010909	Armrest pad 30 cm, left
6	4	1015340	Torx countersunk socket head screw M6x20 iso10642 Precote 85 (100 pieces)
7	2	1015335	Torx socket head screw M6x30 iso14579 (100 pieces)
7-11,15a	1	1010915	Armrest upper part, right
7-11,15b	1	1010913	Armrest upper part, left
7-11,16a	1	1010976	Armrest upper part 10 cm extended, right
7-11,16b	1	1010975	Armrest upper part 10 cm extended, left
8,14	2	9004725	Wing bolt Armrest angle adjuster
9	2	1015331	Torx socket head screw M6x10 iso14579 Precote 85 (100 pieces)
9,11,12a,12b	1	1010910	Side supports mounting set
11	4	1010881	Clamp nut (10 pieces)
13	4	1015332	Torx socket head screw M6x12 iso14579 Precote 85 (100 pieces)
17	2	1010898	Armrest height locking clip (10 pieces)
17,18a	1	1010903	Removable armrest lower, right
17,18b	1	1010901	Removable armrest lower, left
19a,21	1	1010902	Removable armrest socket, right
19b,21	1	1010900	Removable armrest socket, left
20a,21	1	1010974	Removable armrest socket extended, right
20b,21	1	1010973	Removable armrest socket extended, left
7-11,15a,15b,17,18a,18b,19a,19b,21	1	1016188	Removable armrest, set
21	2	1010899	Armrest width locking clip (10 pieces)
22a,6	1	1016558	Armrest pad wide 45 cm, right
22b,6	1	1016559	Armrest pad wide 45 cm, left

28 Sedeo Pro / Flip up armrest

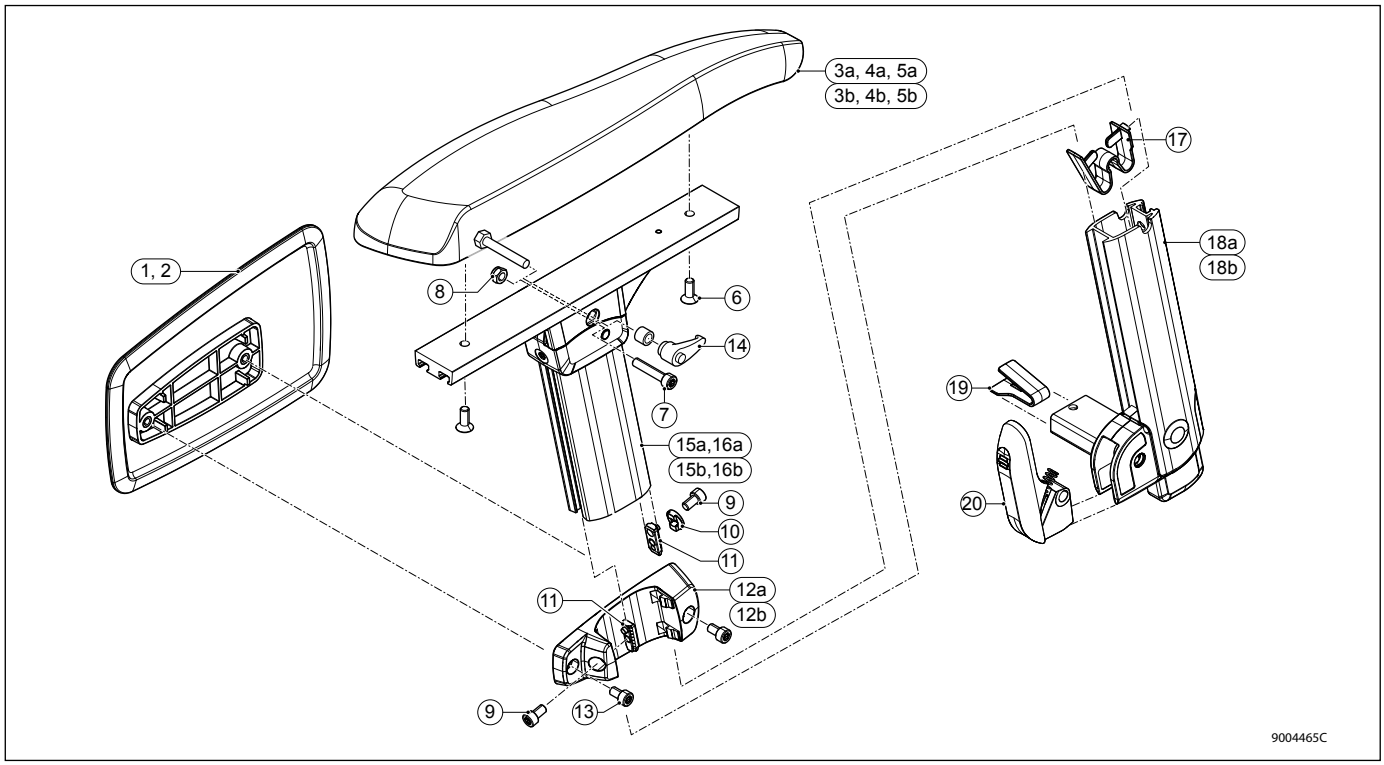

Pos	Qty	Article number	Description
1,13	2	1010911	Side plate PA
2,13	2	1010912	Side support PU
3a,6	1	1010905	Armrest pad 40 cm, right
3b,6	1	1010904	Armrest pad 40 cm, left
4a,6	1	1010907	Armrest pad narrow, 40 cm, right
4b,6	1	1010906	Armrest pad narrow, 40 cm, left
5a,6	1	1010908	Armrest pad 30 cm, right
5b,6	1	1010909	Armrest pad 30 cm, left
6	4	1015340	Torx countersunk socket head screw M6x20 iso10642 Precote 85 (100 pieces)
7	2	1015335	Torx socket head screw M6x30 iso14579 (100 pieces)
7-11,15a	1	1010915	Armrest upper part, right
7-11,15b	1	1010913	Armrest upper part, left
8,14	2	9004725	Wing bolt Armrest angle adjuster
9	2	1015331	Torx socket head screw M6x10 iso14579 Precote 85 (100 pieces)
9,11,12a,12b	1	1010910	Side supports mounting set
11	4	1010881	Clamp nut (10 pieces)
13	4	1015332	Torx socket head screw M6x12 iso14579 Precote 85 (100 pieces)
17	2	1010898	Armrest height locking clip (10 pieces)
17,18a,19, 20	1	1010897	Flip-up armrest, right
17,18b,19, 20	1	1010896	Flip-up armrest, left
7-11,15a,15b,17, 18a,18b,19a,19b,20	1	1016189	Flip up armrest, set
19	2	1010899	Armrest width locking clip (10 pieces)
20	2	9007777	Flip up armrest lever

29 Sedeo Pro / Headrest

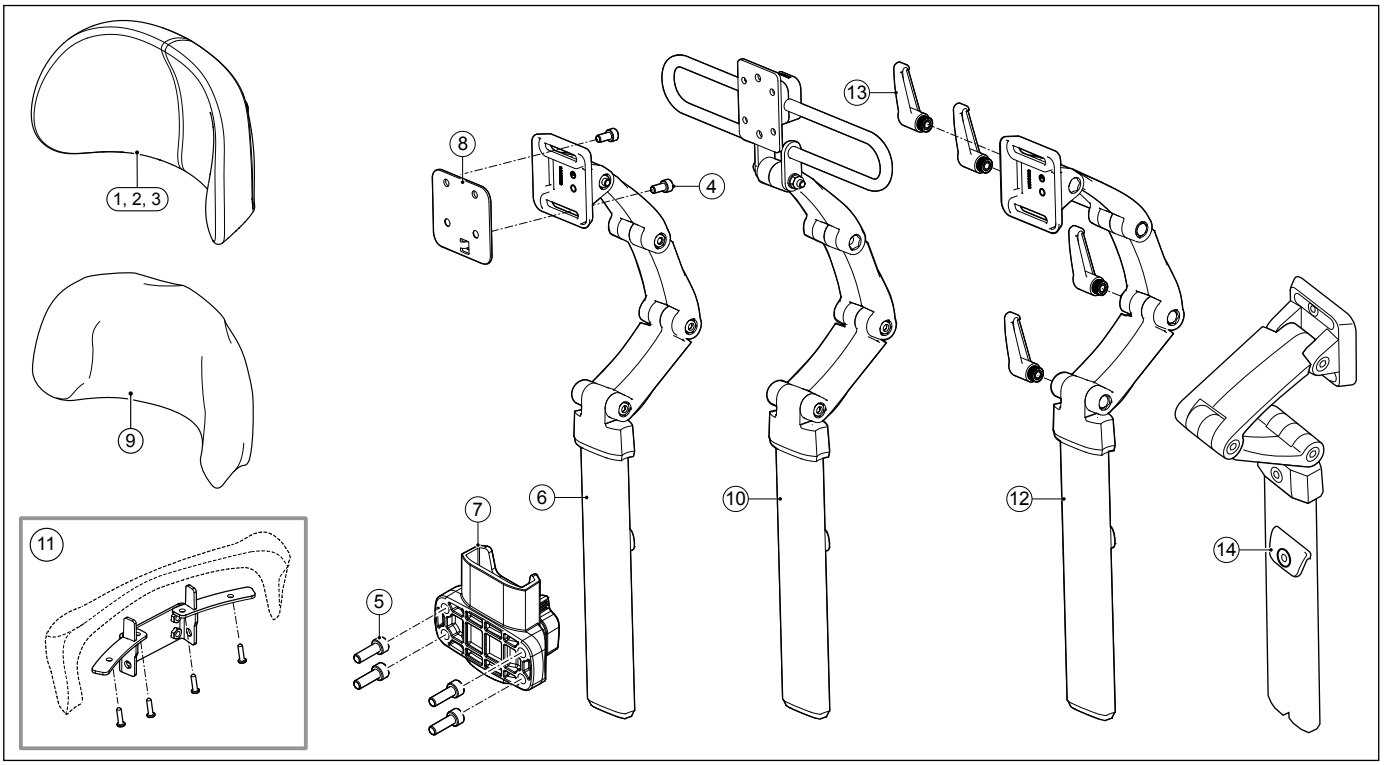

Pos	Qty	Article number	Description
1,4	1	1010957	Headrest small
1,4,5,6,7,11	1	1015354	Headrest small with metal parts and receiver for mounting on push bar
2,4	1	1010996	Headrest large
3,4	1	1010997	Headrest flexible
4	2	1015332	Torx socket head screw M6x12 iso14579 Precote 85 (100 pieces)
4,5,6,7,11	1	1015352	Headrest metal parts with receiver for mounting on push bar
5	4	1015333	Torx socket head screw M6x16 iso14579 Precote 85 (100 pieces)
5,7	1	1017703	Headrest socket set
5,7,11	1	1017705	Headrest socket & mounting
6	1	1010954	Headrest metal parts
8	1	9004116	Headrest adaptor for Sedeo Original
9	1	20009103	Headrest cover small
10	1	1010994	Headrest metal parts width adjustable
11	1	1017704	Headrest mounting bracket for flexible backrest >2014
12.13	1	1010955	Headrest parts quick release
13	1	1017947	Quick release lever for headrest metal parts, set
14	1	1018345	Headrest bracket memory block
-	1	1015403	Headrest hinge set

30 Sedeo Pro / Joystick bracket

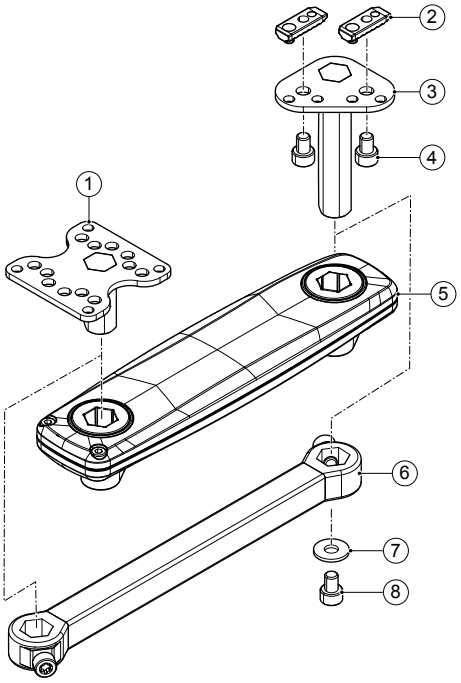

Pos	Qty	Article number	Description
1	1	1010949	Remote interface bracket
2	4	1010881	Clamp nut (10 pieces)
2-4, 7, 8	1	1010950	Remote Armrest bracket
4	2	1015330	Torx socket head screw M6x8 din7984T Precote 85 (100 pieces)
5	1	1010951	Swing-away remote holder
6	1	1010952	Standard remote holder
1-5, 7, 8	1	1011164	Swing-away remote holder complete
1-4, 6-8	1	1011165	Standard remote holder complete
7	1	-	Washer 3xD M6 D9021
8	1	1015331	Torx socket head screw M6x10m iso 14579 Precote 85 (100 pieces)
-	1	0001494	Gear belt 160 XL 3/8" ISO 5296

31 Sedeo Pro / Lighting on flip up armrest

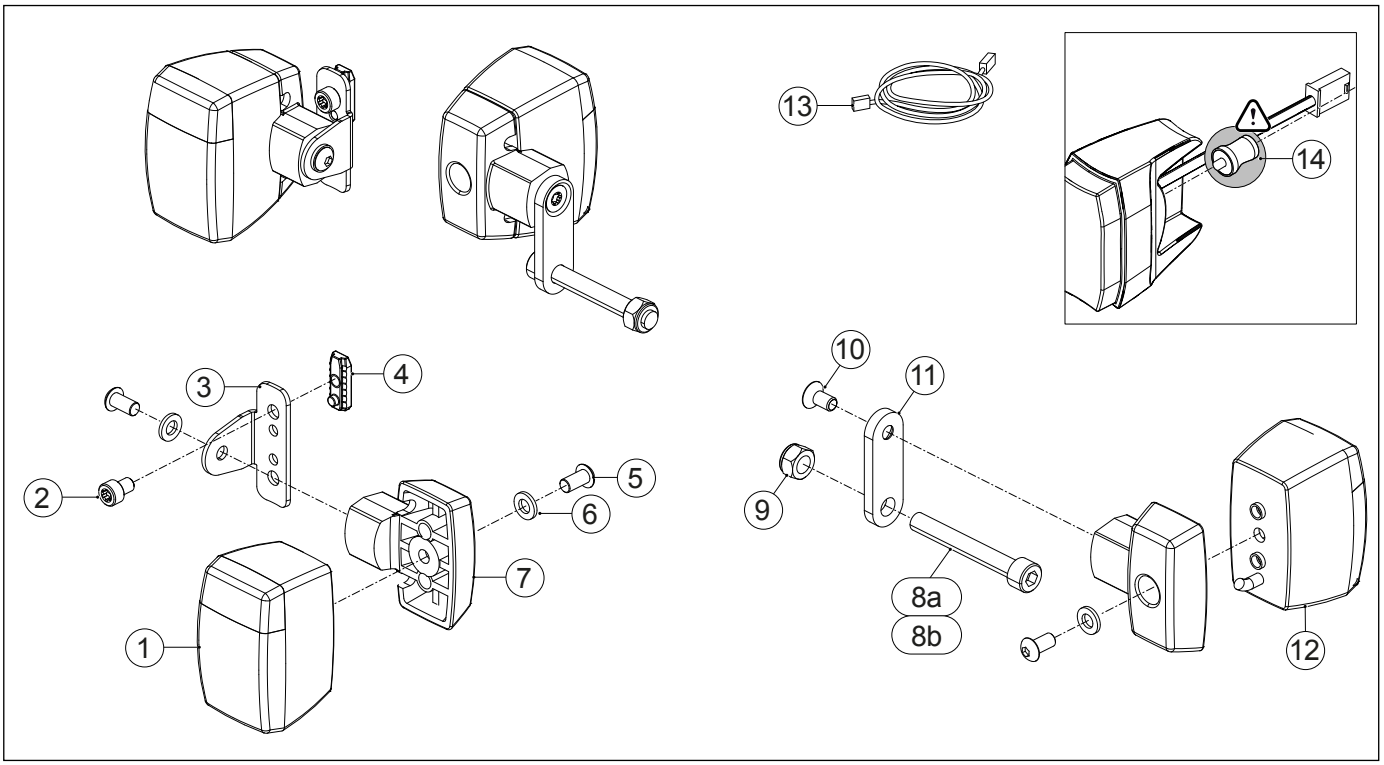

Pos	Qty	Article number	Description
1	2	6002661	Front light module standard
1	2	6000038	Front light module StVZO
1-7	2	1010959	Front light module for mounting on flip up armrest, left = right
1-13	1	1010963	Lighting set Shark for mounting on flip up armrest
1-13	1	1014904	Lighting set DX2 for mounting on flip up armrest
1-13	1	1014905	Lighting set R-net for mounting on flip up armrest
1-13	1	1014906	Lighting set VR2 for mounting on flip up armrest
2	2	1015330	Torx socket head screw M6x8 din7984T Precote 85 (100 pieces)
4	2	1010881	Clamp nut (10 pieces)
5	6	-	Buttonhead M6x12 ISO7380
5,6,8-12	2	1010961	Rear light module for mounting on flip up armrest, left = right
7	4	6000056	Light rubber mounting unit, left = right
8a	2	-	Socket head screw M8x50 DIN912
8b	2	-	Socket head screw M8x60 DIN912
9	2	-	Lock nut M8 D985/8/VZ
12	2	6000039	Rear light module
13	1	9006302	Lighting harness Shark, no tilt and/or lift
13	1	9006298	Lighting harness Shark with tilt and/or lift
13	1	9006312	Lighting harness DX2, no tilt and/or lift
13	1	9006313	Lighting harness DX2 with tilt and/or lift
13	1	9006331	Lighting harness R-net lighting
13	1	9006332	Lighting harness R-net lighting and horn
13	1	9006333	Lighting harness VR2
-	1	1015442	Lighting bracket rear right < July 2015
-	1	1015443	Lighting bracket rear left < July 2015

32 Sedeo Pro / Lighting on seat frame

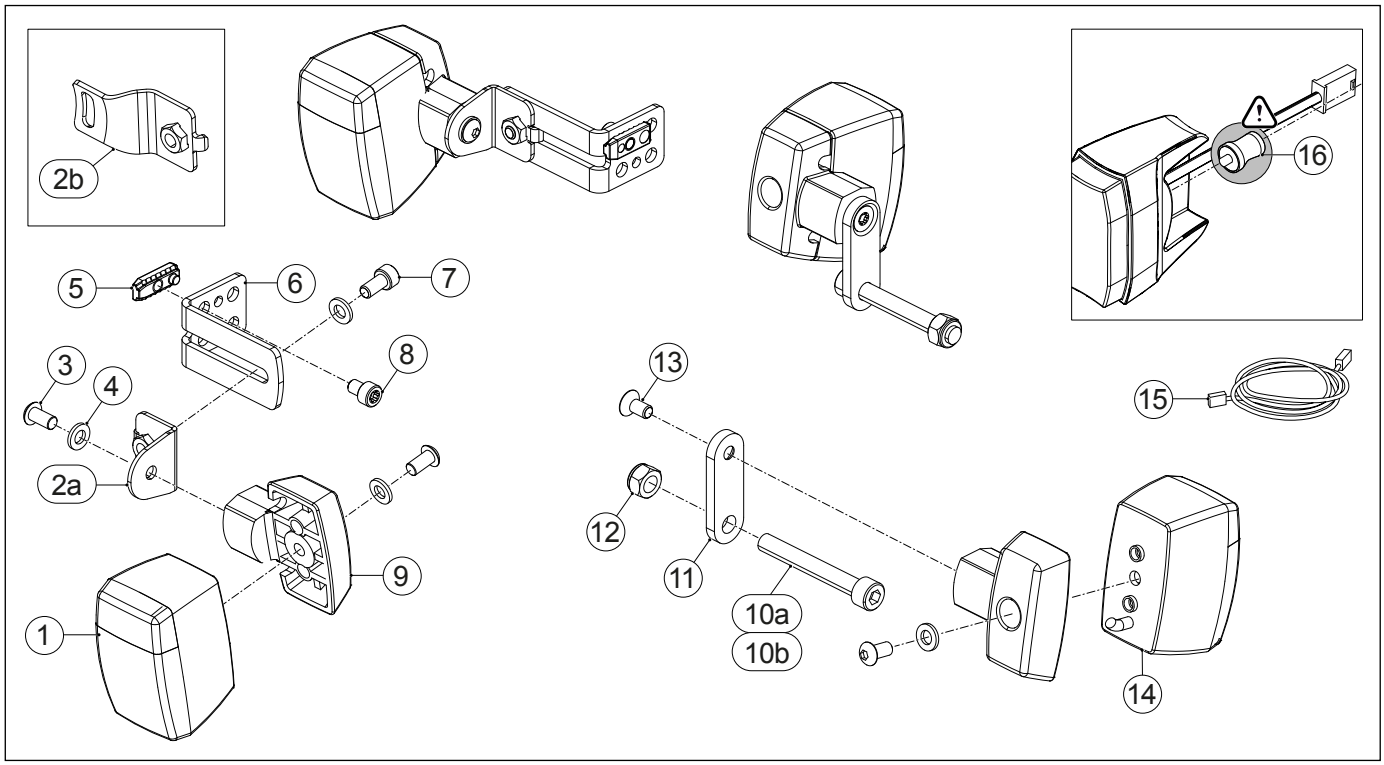

Pos	Qty	Article number	Description
1	2	6002661	Front light module standard
1	2	6000038	Front light module StVZO
1,2a-9	2	1015810	Front light module for mounting on seat frame, left = right
1,2a-15	1	1015812	Lighting set Shark for mounting on seat frame
1,2a-15	1	1015813	Lighting set DX2 for mounting on seat frame
1,2a-15	1	1015814	Lighting set R-net for mounting on seat frame
1,2a-15	1	1015815	Lighting set VR2 for mounting on seat frame
2a,4-8	2	1018044	Lighting bracket front on seat frame, left = right, version > June 2015
3,4,9-14	2	1010961	Rear light module for mounting on seat frame, left = right
5	2	1015133	Clamp nut (10 pieces)
7	2	1015331	Torx socket head screw M6x10 iso14579 Precote 85 (100 pieces)
8	2	1015330	Torx socket head screw M6x8 din7984T Precote 85 (100 pieces)
9	4	6000056	Light rubber mounting unit, left = right
10a	2	-	Socket head screw M8x50 DIN912
10b	2	-	Socket head screw M8x60 DIN912
12	2	-	Lock nut M8 D985/8/VZ
14	2	6000039	Rear light module
15	1	9006302	Lighting harness Shark, no tilt and/or lift
15	1	9006298	Lighting harness Shark with tilt and/or lift
15	1	9006312	Lighting harness DX2, no tilt and/or lift
15	1	9006313	Lighting harness DX2 with tilt and/or lift
15	1	9006331	Lighting harness R-net lighting
15	1	9006332	Lighting harness R-net lighting and horn
15	1	9006333	Lighting harness VR2

33 Sedeo Pro / Abduction support

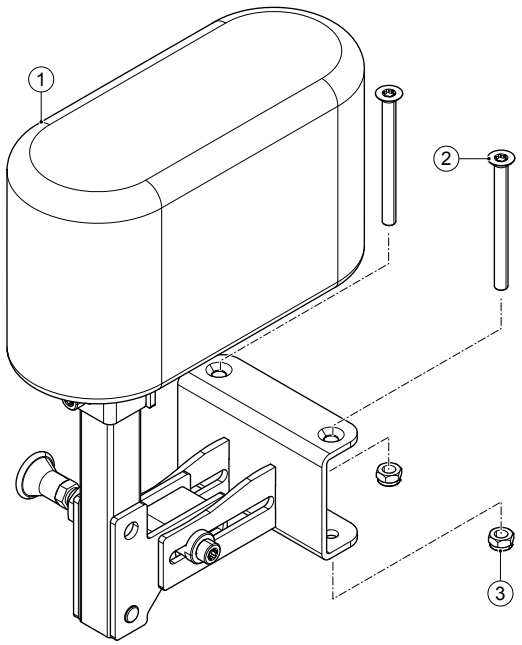

Pos	Qty	Article number	Description
1-3	1	1011002	Abduction support
2	2	1015342	Torx countersunk socket head screw M6x70 iso10642 (100 pieces)
3	2	-	Lock nut M6 D985/8/VZ

34 Sedeo Pro / Hemiplegia armrest - Side cushions wegde shaped - Mirror - Armrest bag

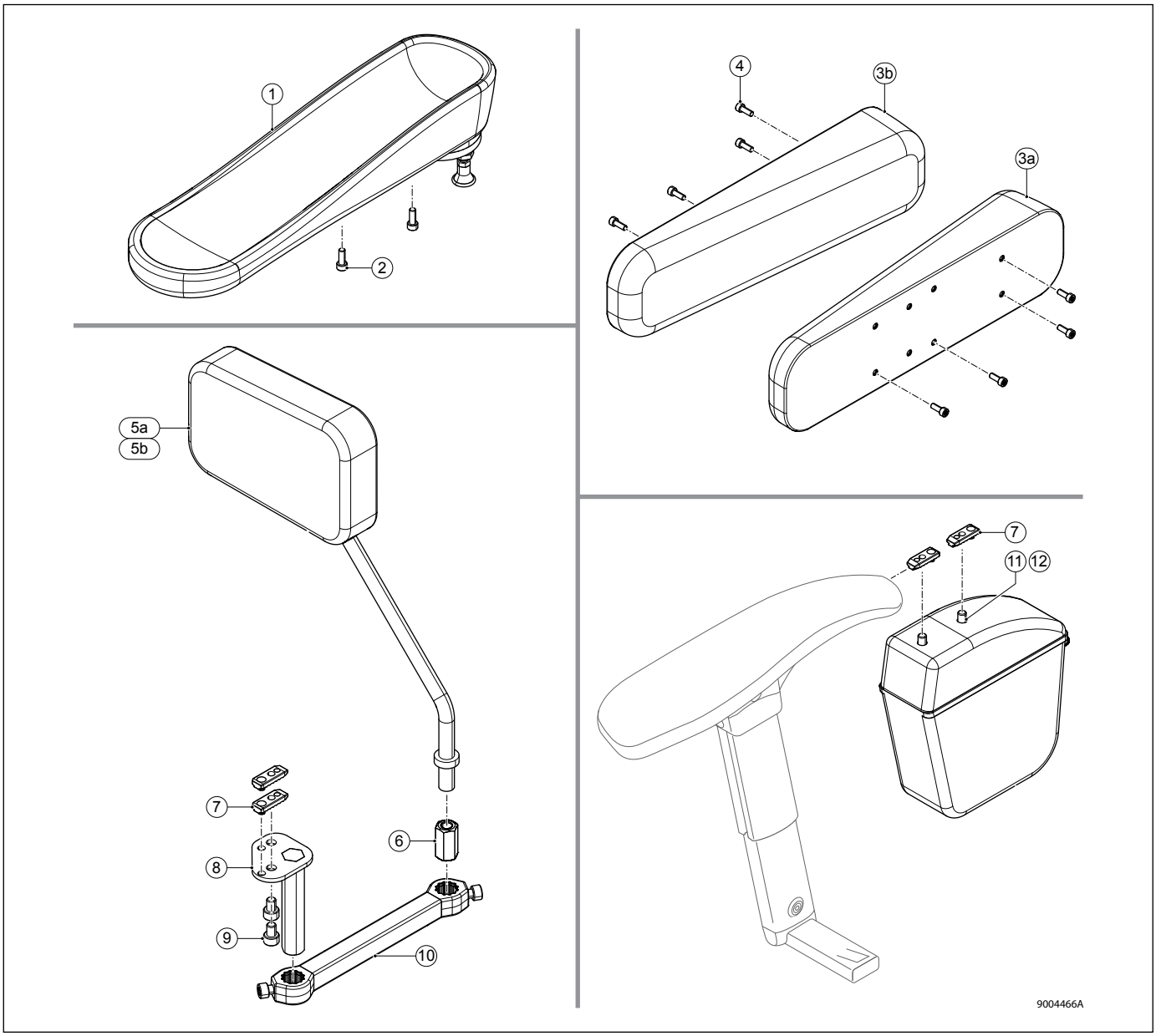

Pos	Qty	Article number	Description
1-2	1	1010977	Hemiplegia armrest
2	2	1015333	Torx socket head screw M6x16 iso14579 Precote 85 (100 pieces)
3a,4	1	1017014	Side cushions wedge shaped, right
3b,4	1	1017015	Side cushions wedge shaped, left
3a,3b,4	1	1010993	Side cushions wedge shaped, set
4	8	1015332	Torx socket head screw M6x12 iso14579 Precote 85 (100 pieces)
5a,6-10	1	1012319	Mirror not joystick side, right
5b,6-10	1	1012321	Mirror not joystick side, left
5a,6,10	1	1012269	Mirror joystick side, right
5b,6,10	1	1012320	Mirror joystick side, left
7	2	1010881	Clamp nut (10 pieces)
7,11,12	1	1012270	Armrest bag
9	2	1015330	Torx socket head screw M6x8 din7984T Precote 85 (100 pieces)
11	2	1015331	Torx socket head screw M6x10 iso14579 Precote 85 (100 pieces)

35 Sedeo Pro / Positioning belt - Cane holder - Thigh support

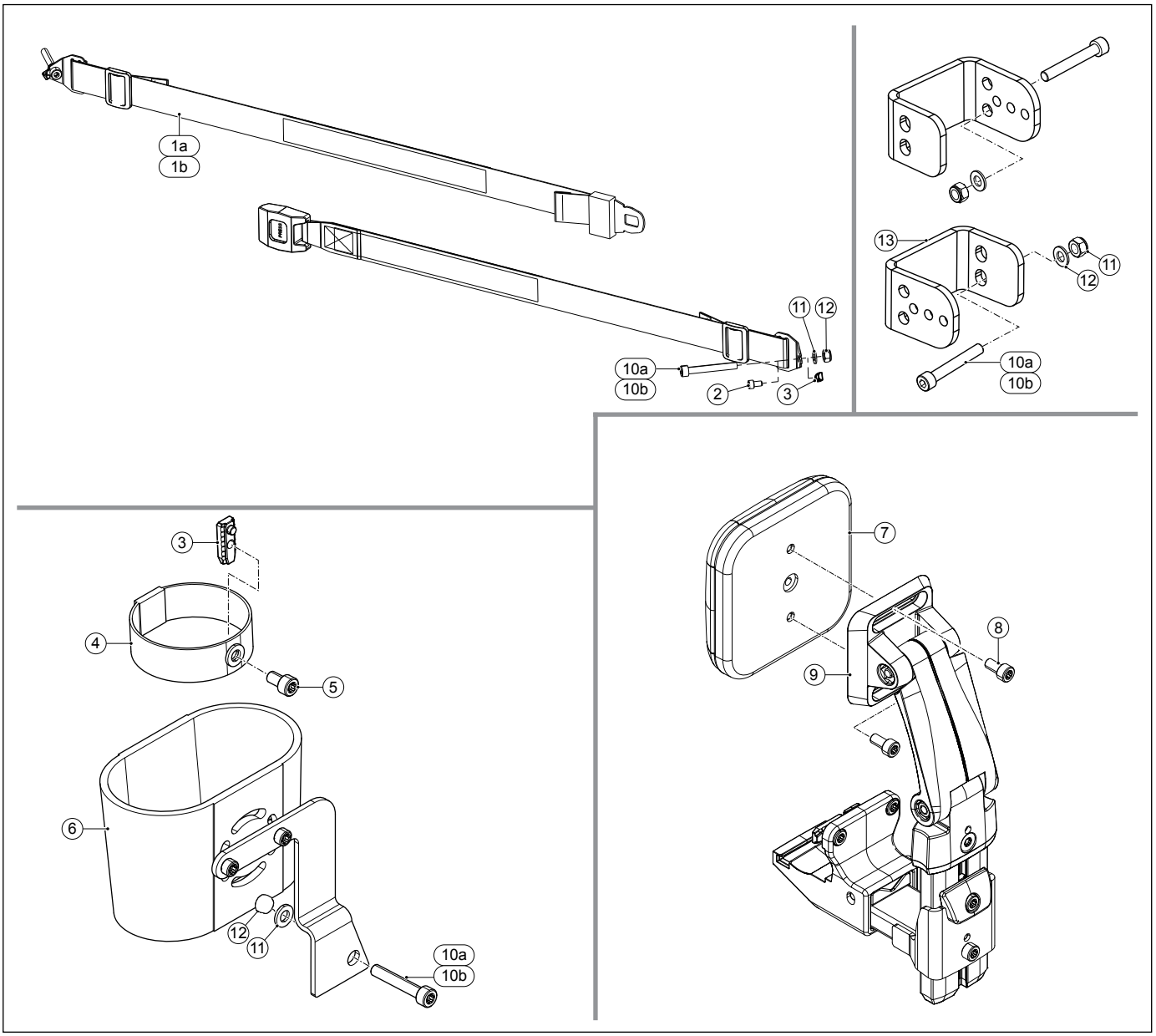

Pos	Qty	Article number	Description
1a,2,3,10-12	1	1010991	Positioning belt short
1b,2,3,10-12	1	1010992	Positioning belt long
2	2	1015331	Torx socket head screw M6x10 iso 14579 Precote 85 (100 pieces)
3	3	1010881	Clamp nut (10 pieces)
3-6,10-12	1	1012268	Cane holder
5	1	1015331	Torx socket head screw M6x10 iso14579 Precote 85 (100 pieces)
7-8	2	1010989	Thigh support cushion
8	2	1015332	Torx socket head screw M6x12 iso14579 Precote 85 (100 pieces)
9	2	1010988	Thigh support mounting bracket
7-9	1	1012905	Thigh support, set
10a	1	-	Socket head screw M8x50 DIN912
10b	1	-	Socket head screw M8x60 DIN912
10-13	2	1016560	Bracket positioning belt SW 50-54 cm, set
11	1	00000.2003	Washer flat M8
12	1	1021402	Lock nut M8 (10 pieces)

36 Sedeo Pro / Worktops manual wheelchair

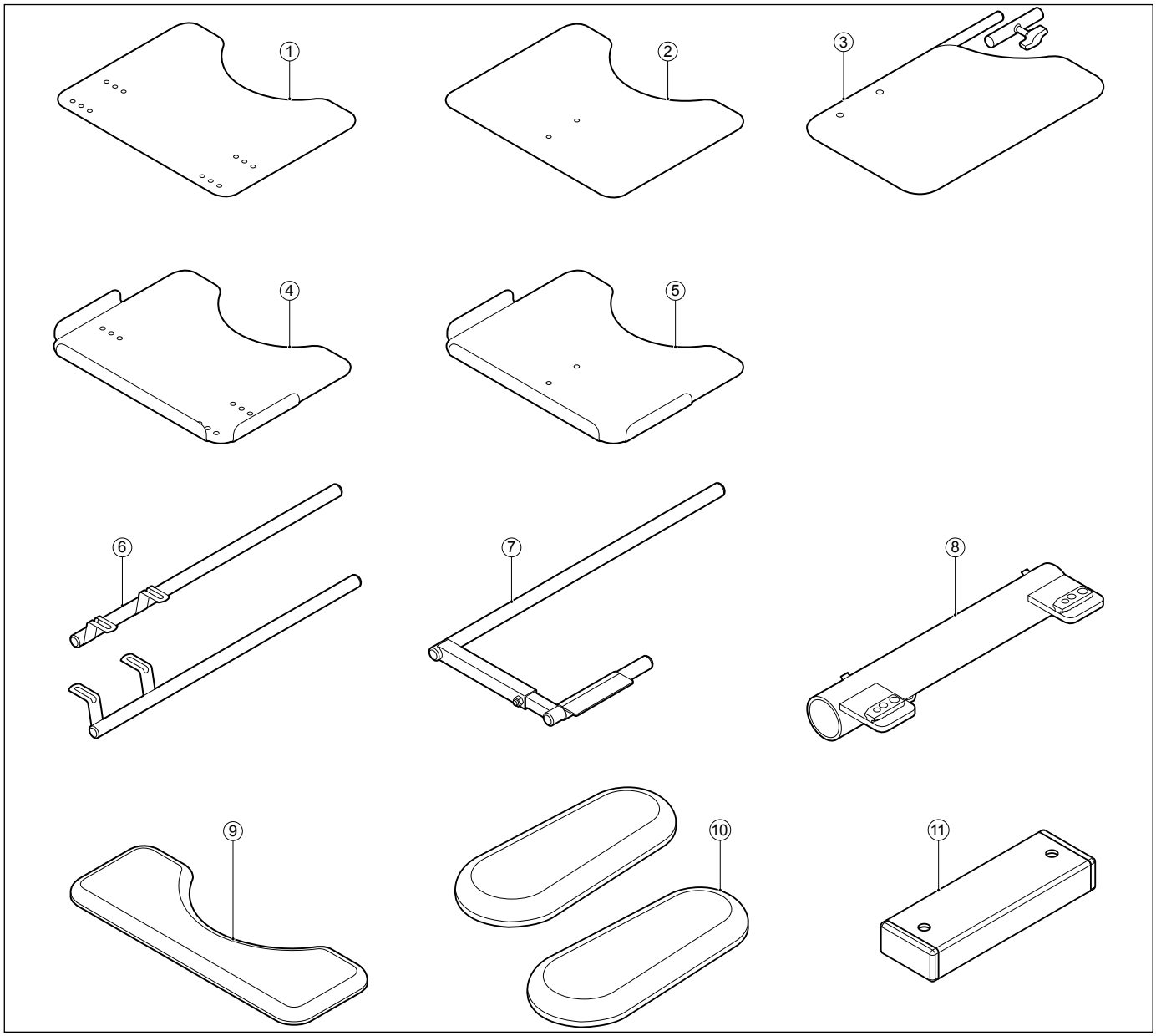

Pos	Qty	Article number	Description
1,6,8	1	1015155	Worktop, fixed, acrylic
2,7,8	1	1015160	Worktop, folding, acrylic
3	1	1015170	Half worktop, acrylic
4,6,8	1	1015159	Worktop, fixed, acrylic, with raised edges, suitable for upholstery
5,7,8	1	1015163	Worktop, folding, acrylic with raised edges, suitable for upholstery
8	1	1015157	Worktop receiving tube assy
9	1	223.00041.505	Partially padded, for worktop, black Sellaskin
10	2	221.00211.505	Elbow pad
11	1	1015664	Worktop holder spacer
-	1	1015171	Receiving tube for hemi worktop

37 Sedeo Pro / Worktops power wheelchair

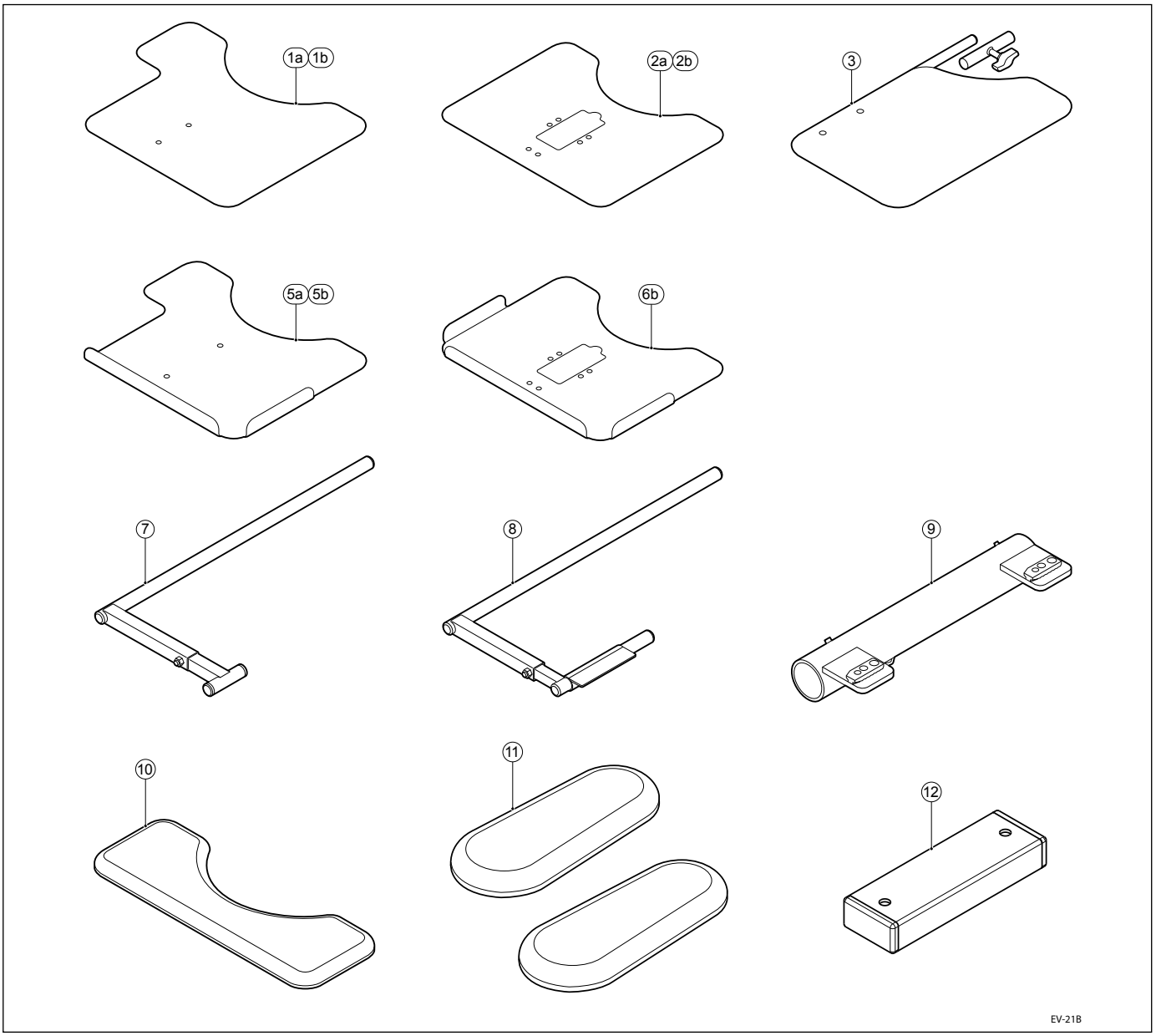

Pos	Qty	Article number	Description
1a,8,9	1	1015167	Worktop, folding, acrylic + joystick recess right hand side
1b,8,9	1	1015168	Worktop, folding, acrylic + joystick recess left hand side
2a,7,9	1	1015169	Worktop with center remote recess for DX
2b,7,9	1	1015455	Worktop with center remote recess for R-net
3	1	1015170	Half worktop, acrylic
5a,8,9	1	1015162	Worktop, folding, acrylic with raised edges, suitable for upholstery + joystick recess right hand side
5b,8,9	1	1015164	Worktop, folding, acrylic with raised edges, suitable for upholstery + joystick recess left hand side
6b,7,9	1	1015165	Worktop, folding, acrylic with raised edges, suitable for upholstery, with Center Remote Recess
9	1	1015157	Worktop receiving tube assy
10	1	223.00041.505	Partially padded, for worktop, black Sellaskin
11	2	221.00211.505	Elbow pad
12	1	1015664	Worktop holder spacer
-	1	1015171	Receiving tube for hemi worktop

38 Sedeo Pro / Third party backrest

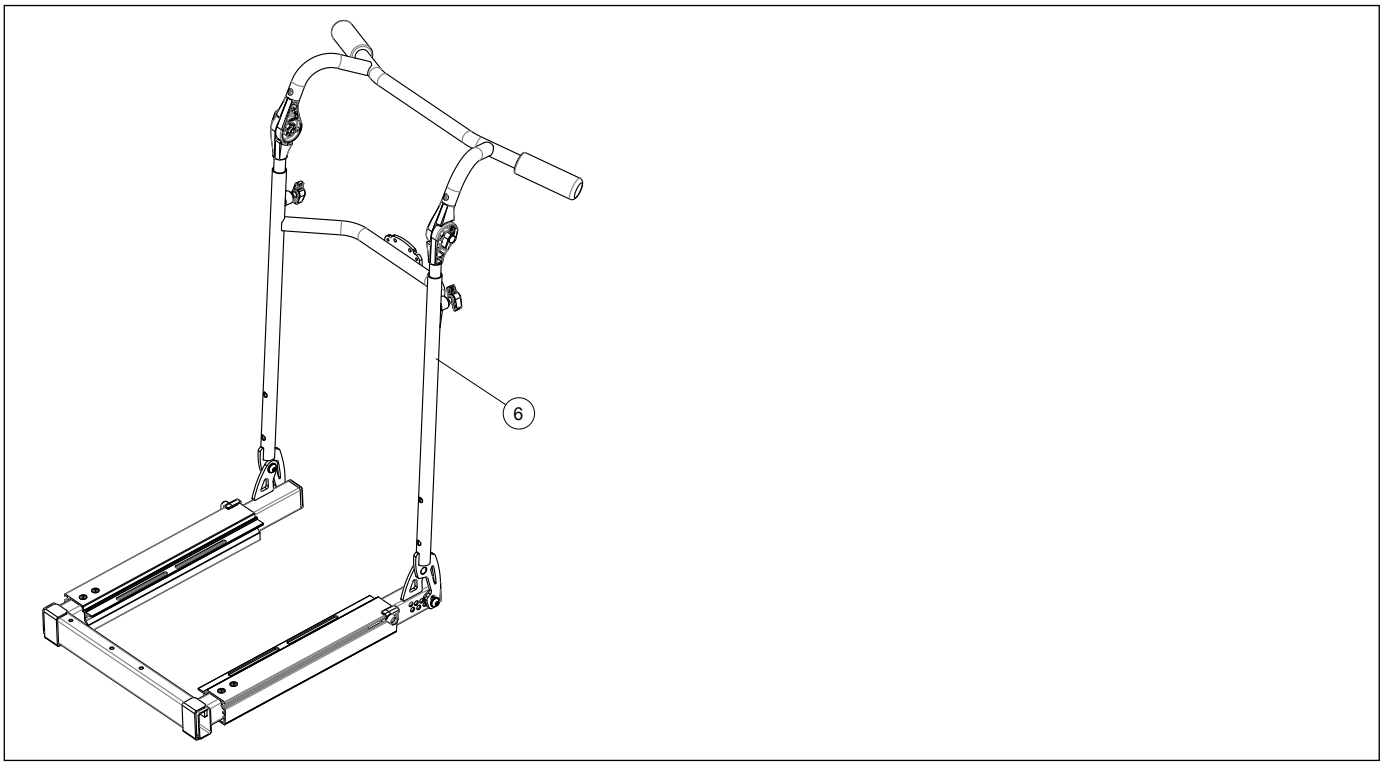

Pos	Qty	Article number	Description
6	1	1017907	Sedeo Pro seat frame with seat shell backrest frame

5 Service instructions

5.1 Maintenance plan / Reimbursement plan

Below, we have indicated what needs to be checked, how often this should be done and by whom.

Time	Description	To be carried out by	
		User	Supplier
Monthly	• Cleaning the seating system.	x	-
	• Cleaning the upholstery (if necessary).	x	-
Annually	• Inspecting the mechinical parts	-	x
	• Checking all fastenings and bolts: tighten if necessary	-	x

For disinfecting spray the chair with alcohol.

This document is a reference book to be used to order parts for the Sedeo seating system.

Assembly, replacement and adjustment instructions

The paragraphs § 5.2 (Sedeo Lite) and § 5.3 (Sedeo Pro) cover illustrated assembly, replacement and adjustment instructions.

Every separate visual instruction is prefaced with:
• Preparation remarks
• Instructions
• Relevant article numbers
• Tools used
• Notice (if applicable): extra notes covering information you need when executing the specific task)

5.2 Assembling, replacement and adjustment instructions Sedeo Lite

5.2.1 Replacing the backrest frames

Replacing a backrest frame with a different seat width

Preparation
Note! Switch off the wheelchair via remote control (power wheelchair only).

Instructions
Note! Suitable work area required!
- Follow the illustrated instructions for replacing the backrest hinge set and frame sling.
- Rebuild afterwards the wheelchair in reversed order.

Relevant article numbers
- 1012923/-24/-25/-26 Backrest hinge set SW 42/45/48/51
- 9006172/-73/-74/-75 Backrest frame sling SW 42/45/48/51
- 1012972/-73/-74/-75 Backrest frame strapped SW 42/45/48/51
- 1012950/-51/-52/-53 Backrest sling SW 42/45/48/51
- 1012954/1013161/1012955/1013162 Backrest with adjustable straps SW 42/45/48/51
- 1012921 Backrest wing bolt set
- 1012922 Cover set

Tools used

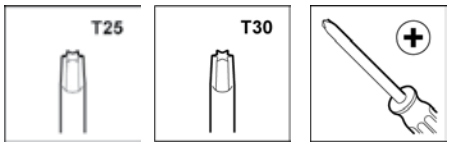

1

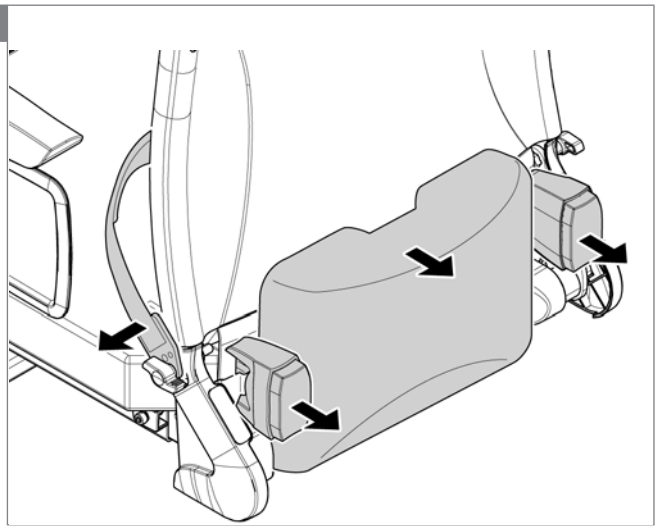

2

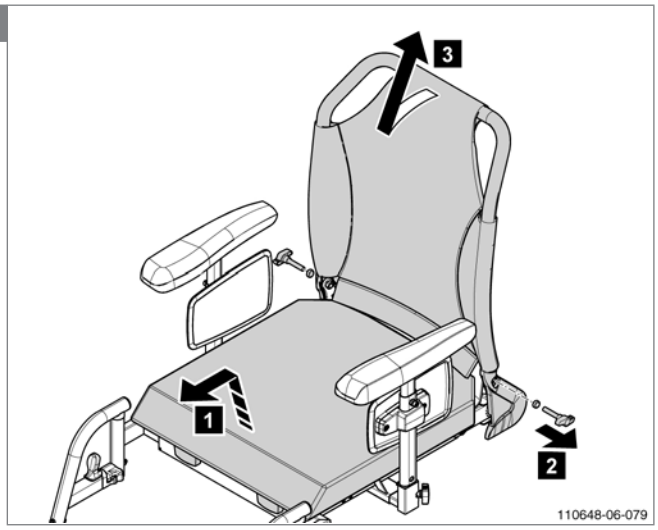

3

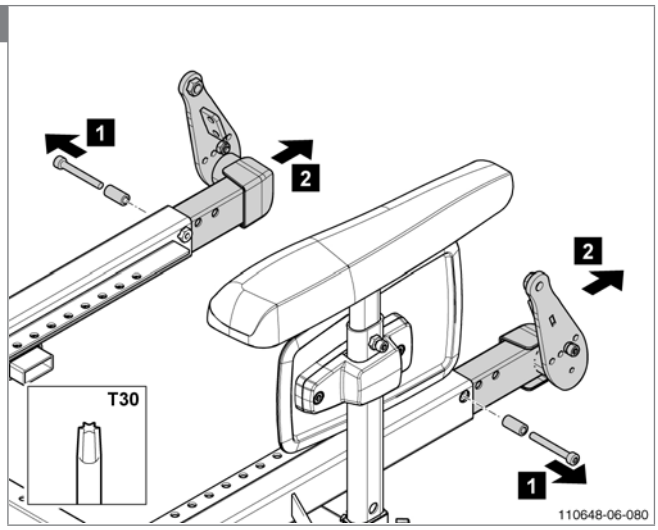
1
2
2
T30
1
110648-06-080

4

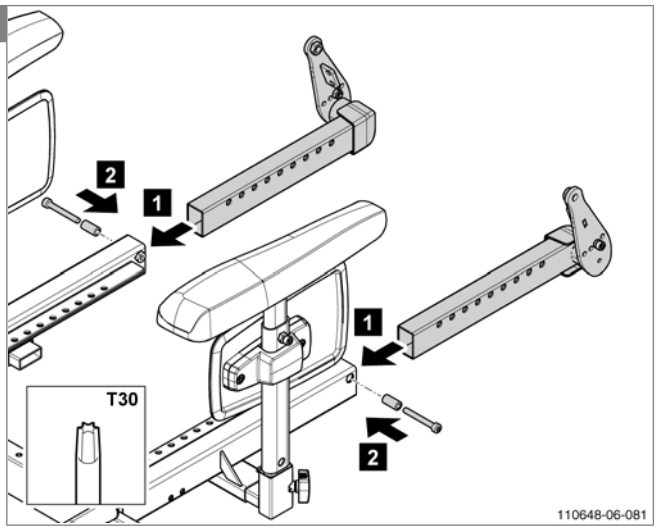
2
1
1
T30
2
110648-06-081

5

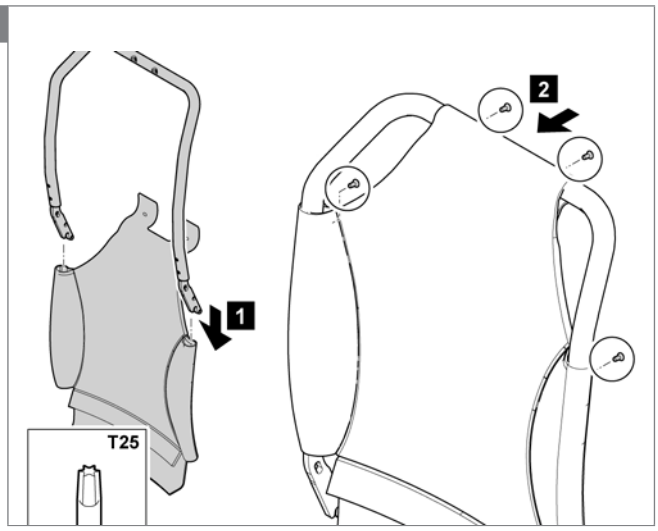
2
1
T25

6

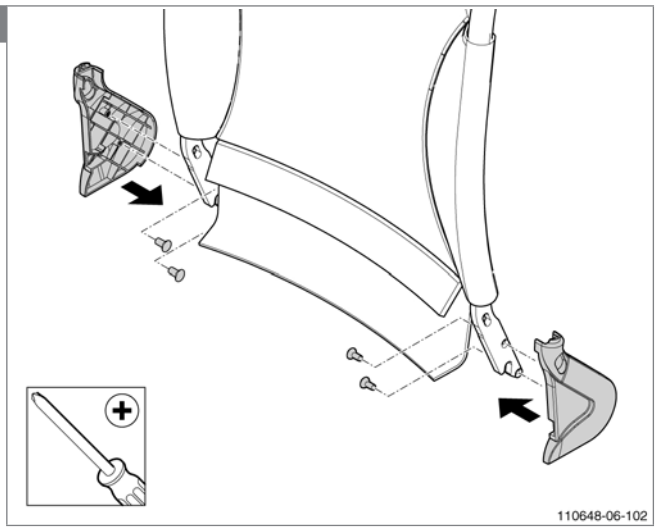
110648-06-102

7

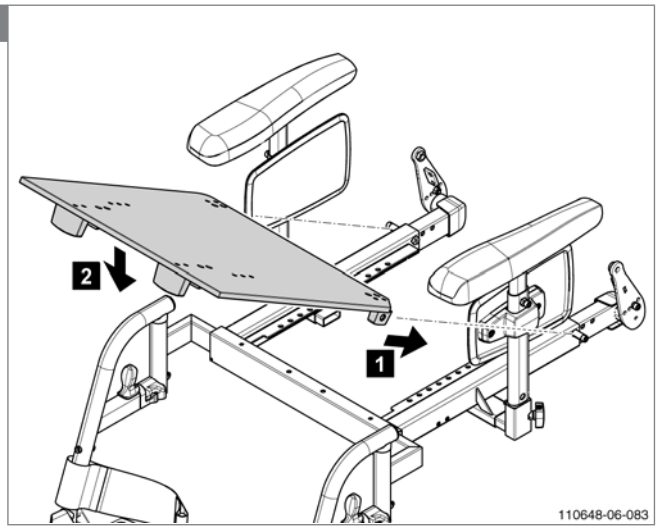
2
1
110648-06-083

8

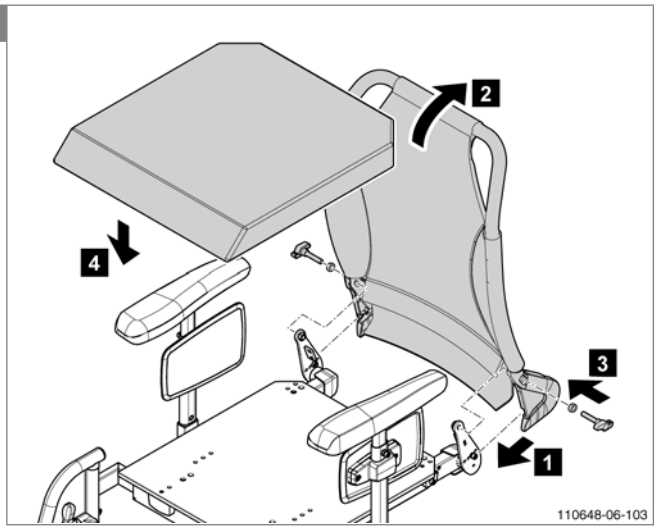
2
4
3
1
110648-06-103

Replacing a backrest sling frame for a backrest adjustable strapped frame

Preparation
Note! Switch off the wheelchair via remote control (power wheelchair only).

Instructions
Note! Suitable work area required!
- Follow the illustrated instructions for replacing the backrest sling frame for a backrest adjustable strapped frame.
- Rebuild afterwards the wheelchair in reversed order.

Relevant article numbers
- 1012927/-28/-29/-30 Backrest frame strapped SW 42/45/48/51
- 1012954/-55 Backrest with adjustable straps SW 42/48
- 1013161/-62 Backrest with adjustable straps SW 45/51
- 1012921 Backrest wing bolt set
- 1012922 Cover set

Tools used

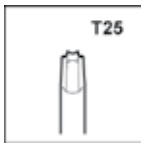

1
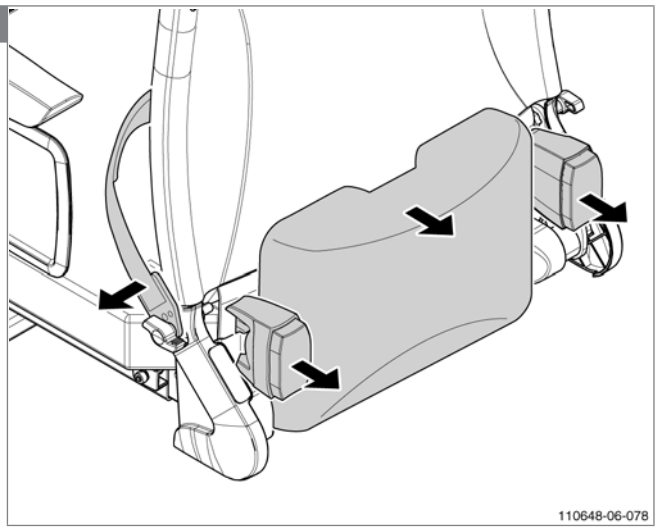

2
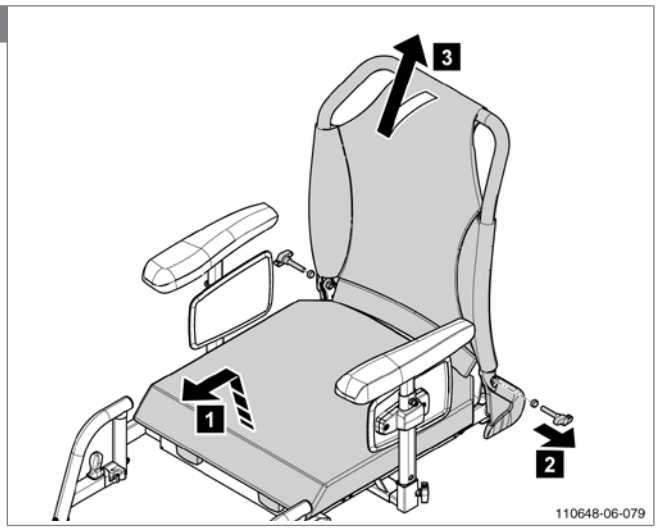

3
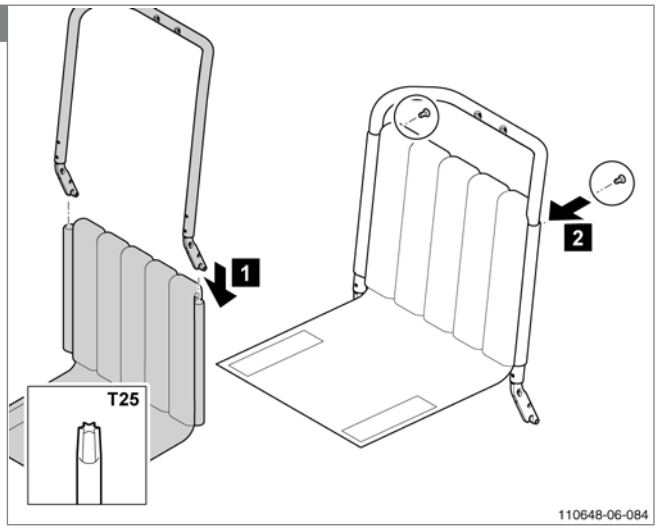

4
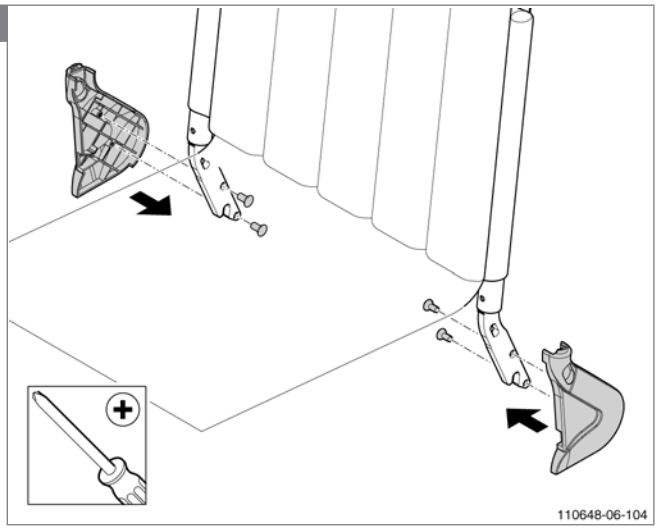

5

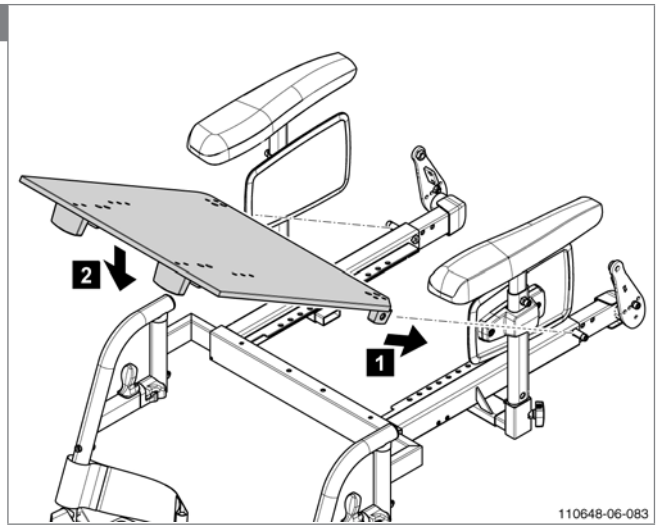

6

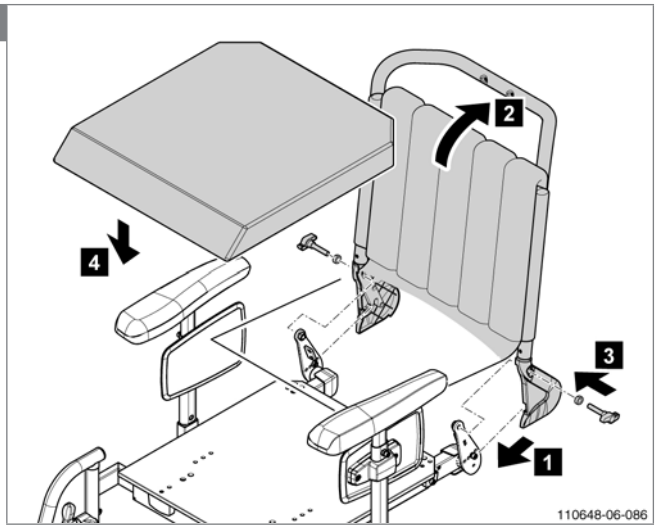

5.2.2 Adjusting or mounting the seat cushion fixation set

Preparation
Note! Switch off the wheelchair via remote control (power wheelchair only).

Instructions
Note! Suitable work area required!
- Follow the illustrated instructions for adjusting or mounting the seat cushion fixation.
- Rebuild afterwards the wheelchair in reversed order.

Relevant article numbers
- 1010953 Seat cushion fixation set
- 1012267 Interface board Sedeo Original

Tools used

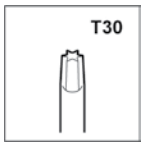

Notice
Ex-factory the fixation brackets on the cushion or seat are always mounted in the middle position! In case you want to reposition the seat cushion, place the fixation brackets at the front and backside always in the same holes! The seat board Sedeo Lite SD40 has only two positions. Ex-factory the fixation brackets on the seat board are mounted in the back position.

1

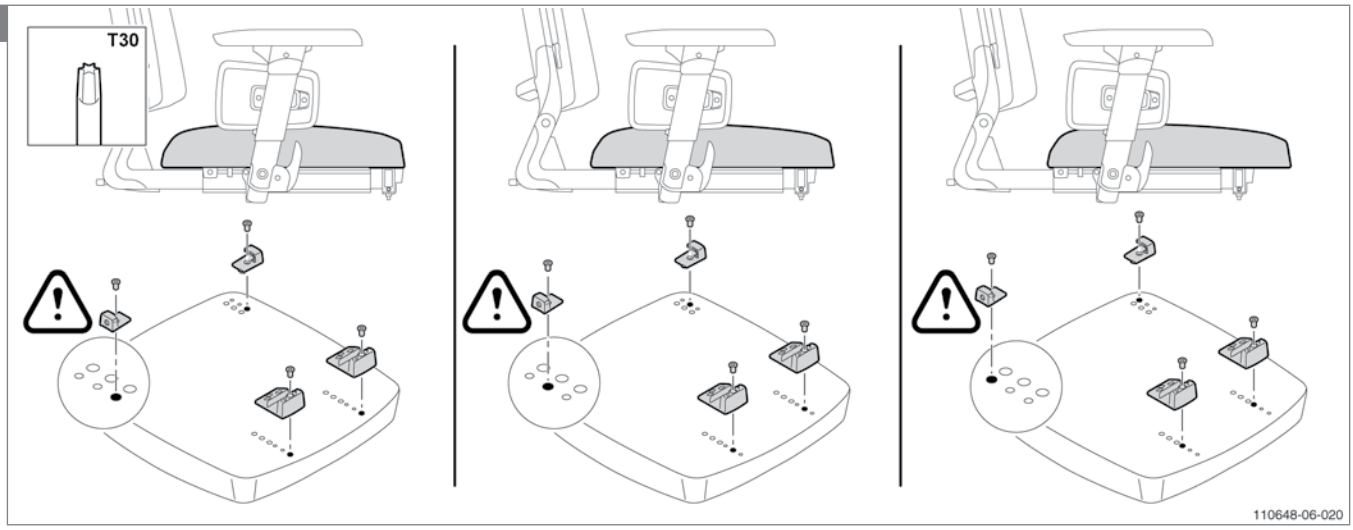

5.2.3 Mounting the standard or swing-away remote holder

Preparation
Note! Switch off the wheelchair via remote control (power wheelchair only).

Instructions
Note! Suitable work area required!
- Follow the illustrated instructions for mounting the standard or the swing-away remote bracket.
- **Note!** Check the cable laying after you have mounted the swing-away remote holder, connected the remote control and adjusted the height, width and depth of the armrest. The remote control cable needs enough clearance to swing away the remote control freely inwards and outwards.

Relevant article numbers
- 1010951 Swing-away remote holder
- 1010952 Standard remote holder
- 1011164 Swing-away remote holder complete
- 1011165 Standard remote holder complete

Tools used

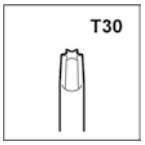

1

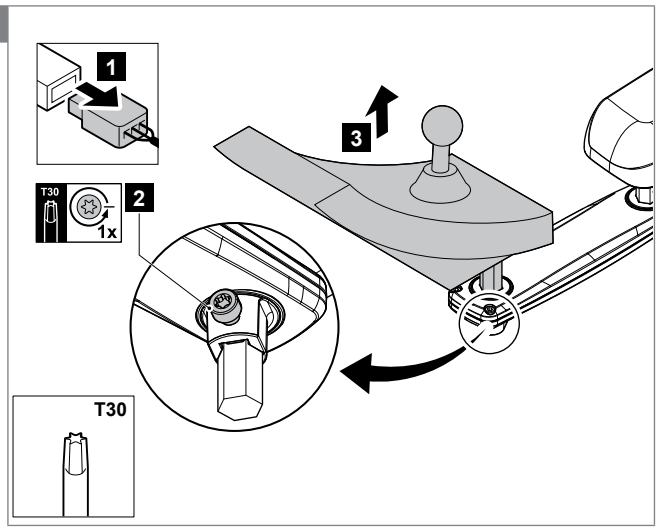

2

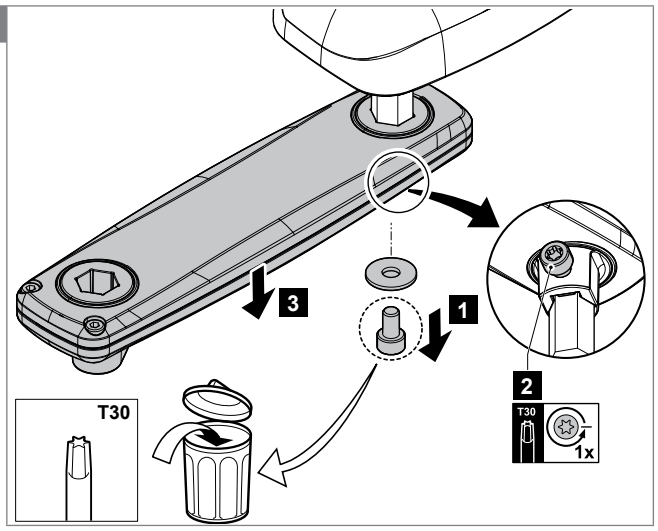

3

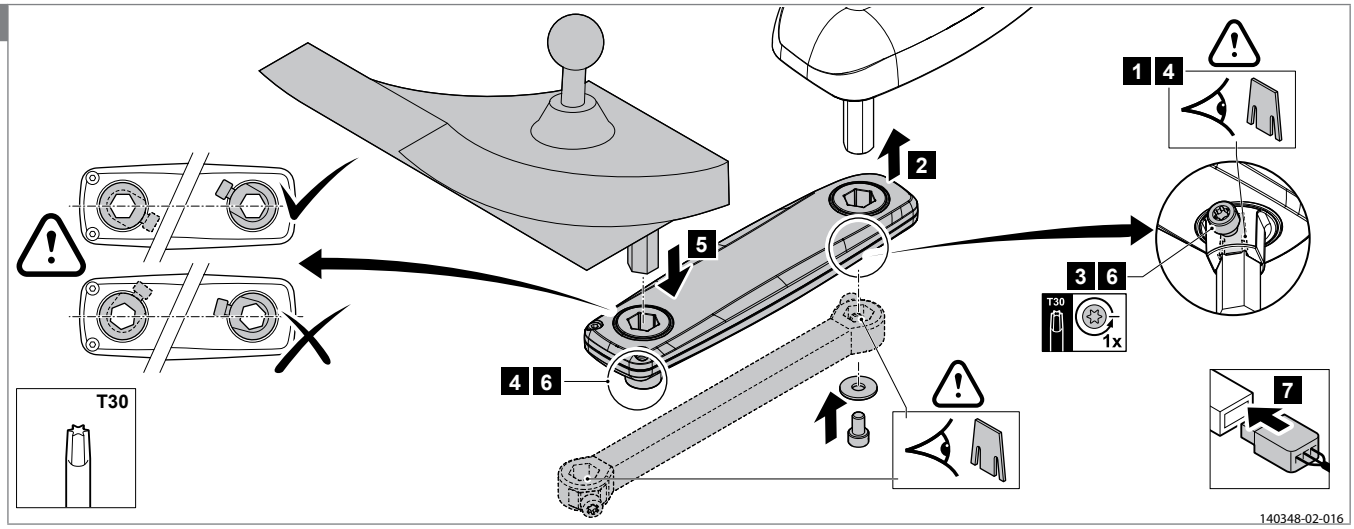

Note! Notice the position of the hexagon at any bracket. The hexagon should point with an edge forward!

5.2.4 Mounting the lights

Preparation
Note! Switch off the wheelchair via remote control (power wheelchair only).

Instructions
Note! Suitable work area required!
- Follow the illustrated instructions for mounting the lights.
- Rebuild afterwards the wheelchair in reversed order.

Relevant article numbers
- 1014907 Lighting set Shark
- 1014908 Lighting set DX2
- 1014909 Lighting set R-net
- 1014910 Lighting set VR2
- 1012957 Front light module incl mounting bracket, left = right
- 1012959 Rear light module incl mounting bracket, right
- 1012960 Rear light module incl mounting bracket, left
- 9006302 Lighting harness Shark, no tilt and/or lift
- 9006298 Lighting harness Shark with tilt and/or lift
- 9006312 Lighting harness DX2, no tilt and/or lift
- 9006313 Lighting harness DX2 with tilt and/or lift
- 9006331 Lighting harness R-net lighting
- 9006332 Lighting harness R-net lighting and horn
- 9006333 Lighting harness VR 2

Tools used

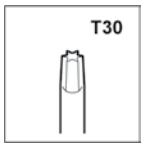

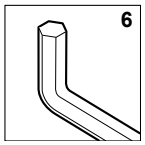

1

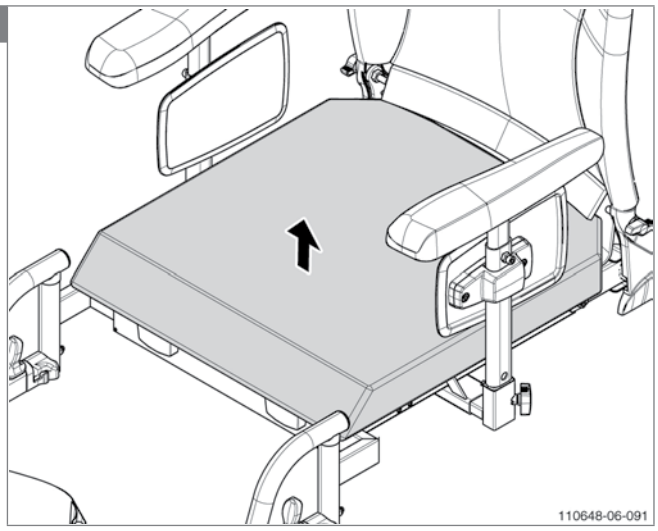

2

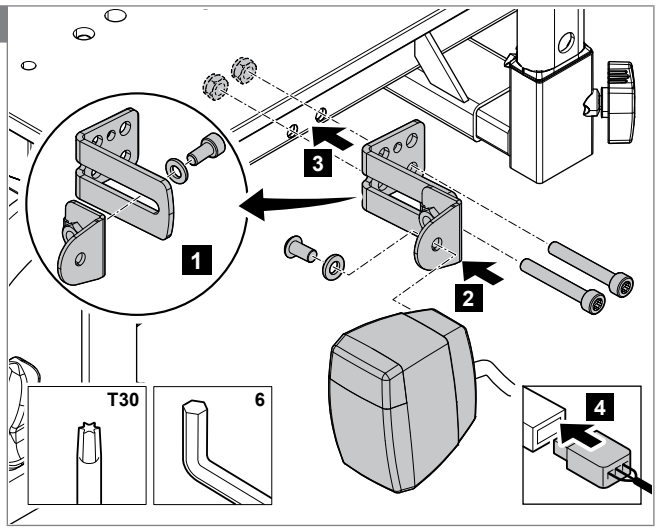

3

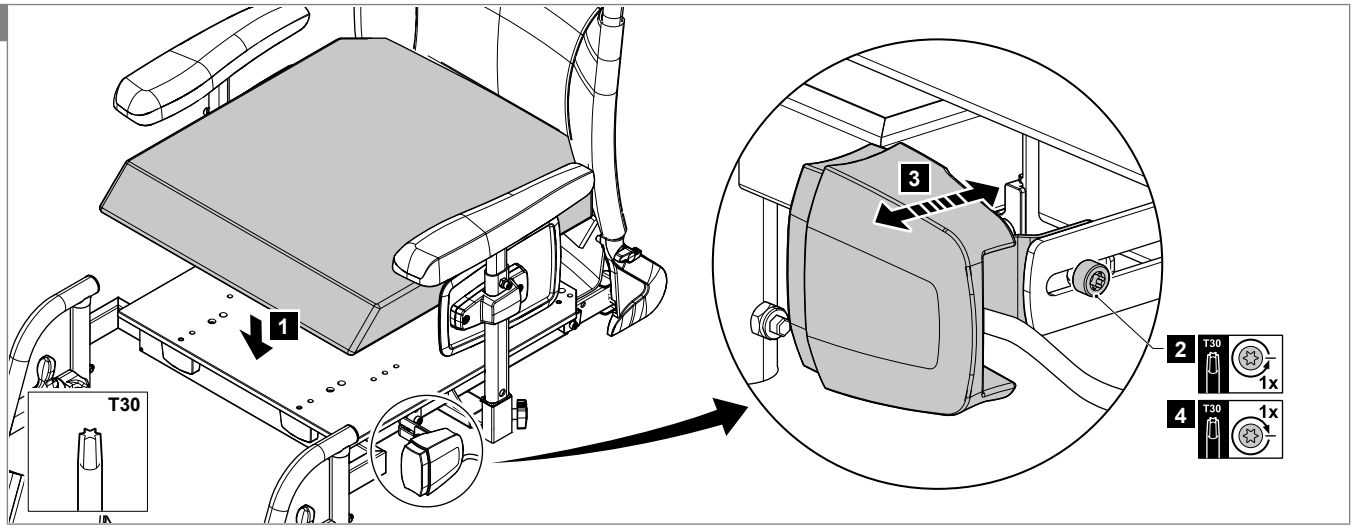

4

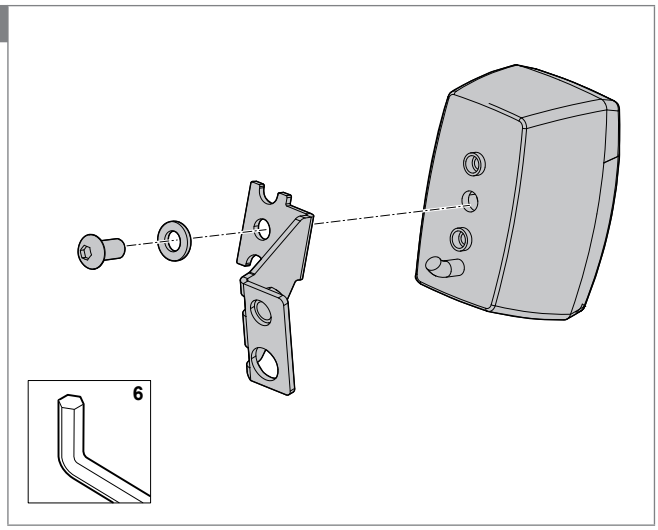

5

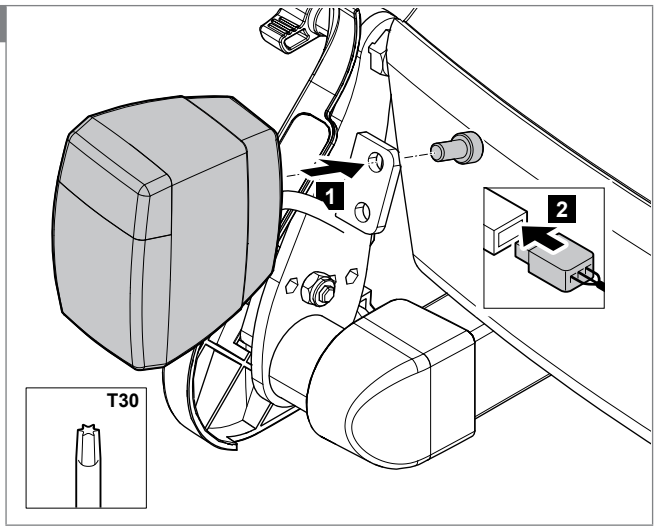

5.2.5 Mounting the positioning belt

Preparation
Note! Switch off the wheelchair via remote control (power wheelchair only).

Instructions
Note! Suitable work area required!
- Follow the illustrated instructions for mounting the positioning belt short or long.

Relevant article numbers
- 1010991 Positioning belt short
- 1010992 Positioning belt long

1

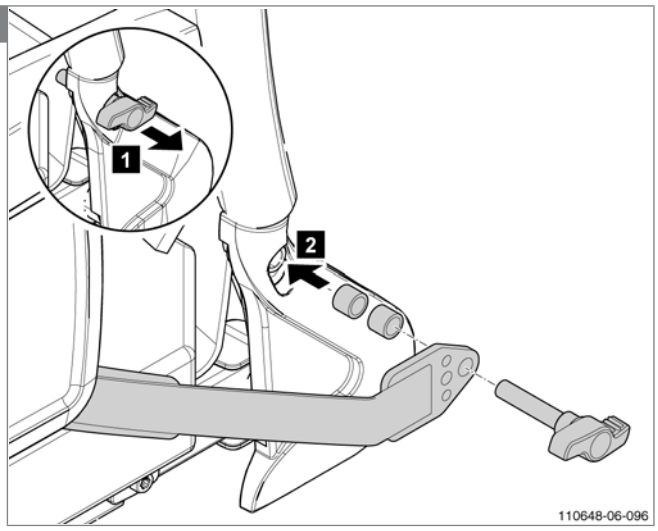

5.3 Assembly, replacement and adjustment instructions Sedeo Pro

5.3.1 General instruction: Removing drop out protection parts

Introduction
Sedeo Pro has parts that are protected against dropping out, at the moment you take them out to maximum position. Parts like armrests (width/height), legrests (width/height) and sliders have such a protection.

Preparation
Note! Switch off the wheelchair via remote control (power wheelchair only).

Instructions
Note! Suitable work area required!
- Loosen the wing nut or T30 Torx bolt one turn, pull out the part in the maximum position and press the locking pin to take out the part.

Relevant article numbers
- N.a.

Tools used

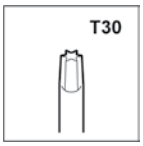

1

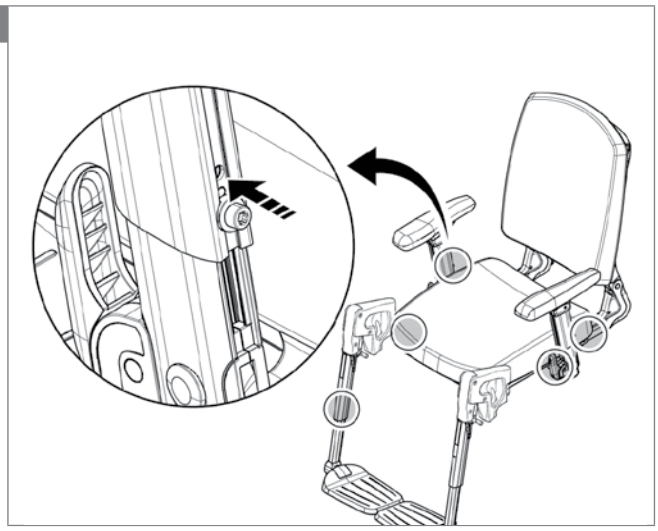

2

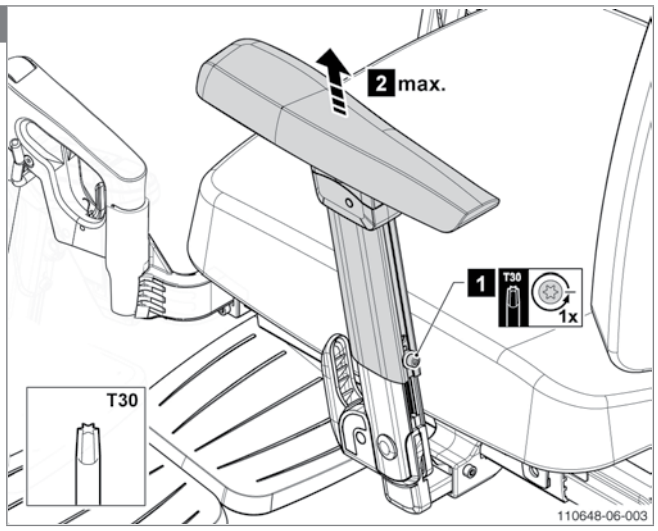

3

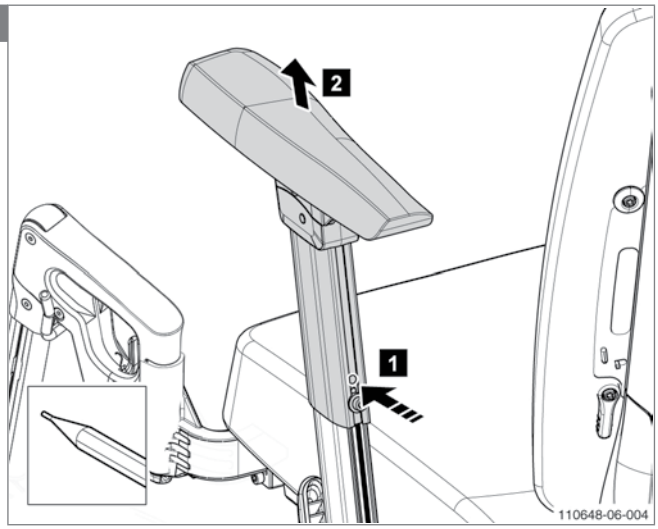

5.3.2 General instruction: The use of the clamp nut

Introduction
Sedeo Pro is build with extrusion profiles. The clamp nut connection is designed for strong and reliable connections and easy adjustable parts. Most part connections, mounted on extrusion profiles, have such a clamp nut connection.

Preparation
Note! Switch off the wheelchair via remote control (power wheelchair only).

Instructions
Note! Suitable work area required!
- Each clamp nut has a protection, which has to be positioned across a protection opening.
- The following actions are required for adjusting these parts: loosen the Torx bolt one or two turns, position part in the desired position and tighten the Torx bolt.

Relevant article numbers
- N.a.

Tools used

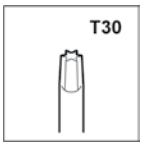

1
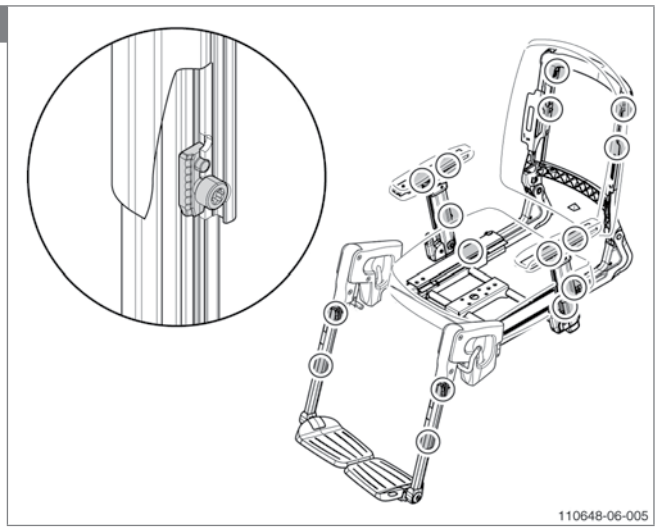

2
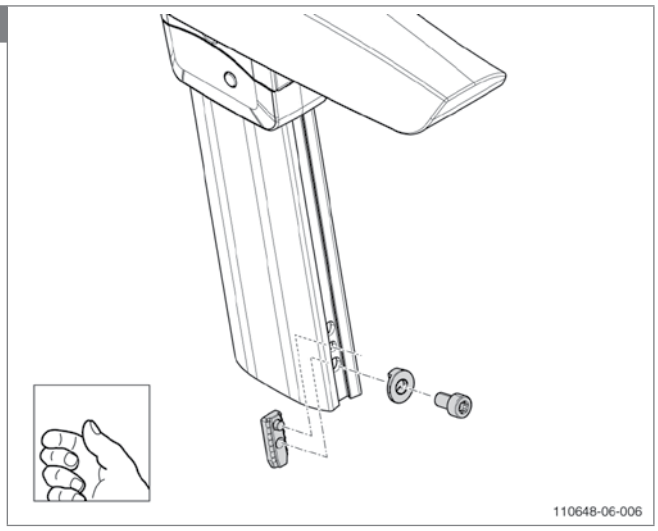

3
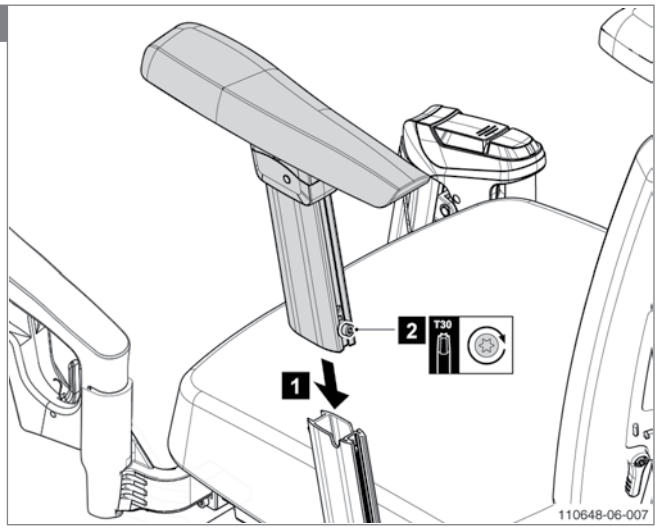

4
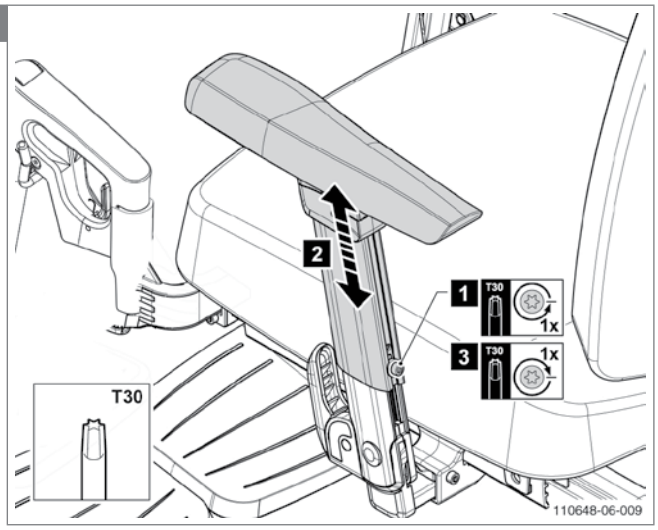

5.3.3 Replacing the angle adjustable/reclining backrests

Removing the angle adjustable backrest

Preparation
Note! Switch off the wheelchair via remote control (power wheelchair only).

Instructions
Note! Suitable work area required!
Note! This task is a preparation for mounting the manually reclining backrest or mounting the electrically reclining backrest.
- Follow the illustrated instructions for removing the angle adjustable backrest (right handed slider).

Relevant article numbers
- N.a.

Tools used

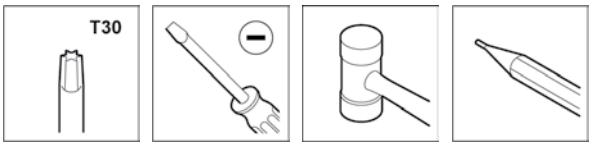

1
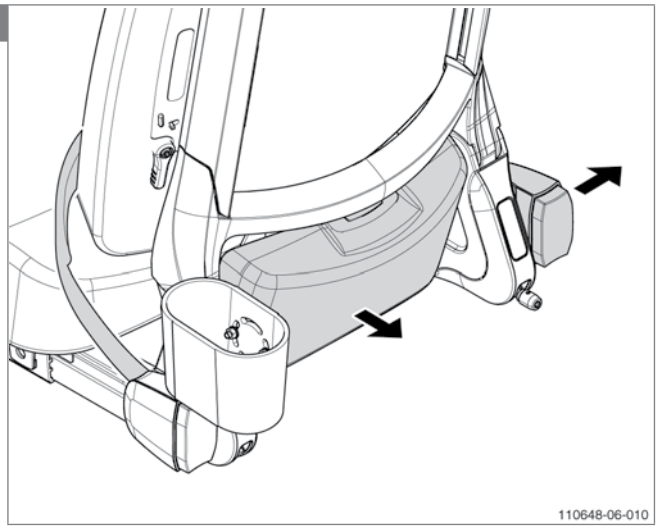

2
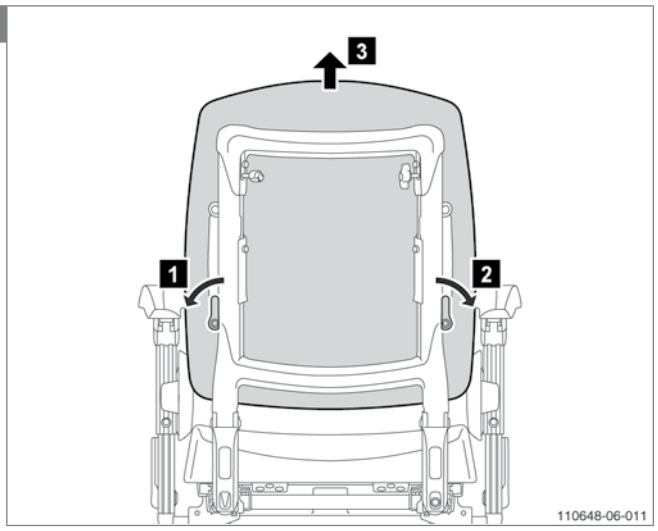

3
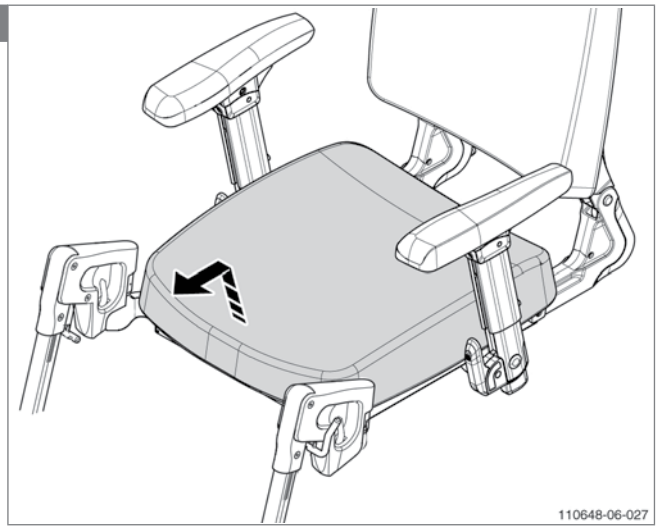

4
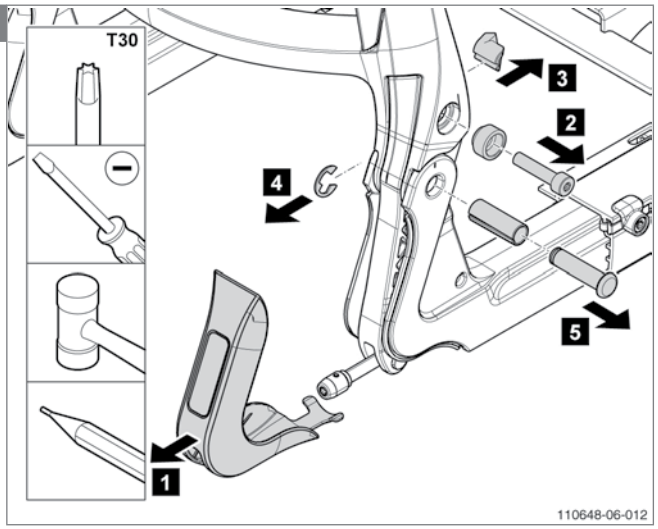

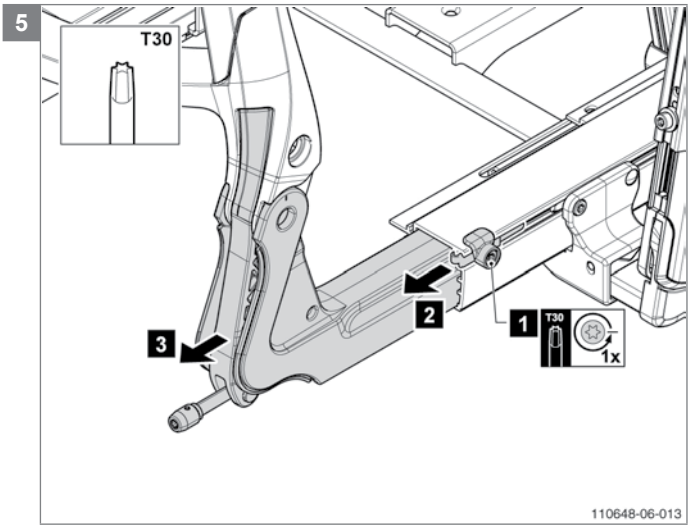
5
T30
3
2
1
T30
1x
110648-06-013

Mounting the manually reclining backrest

Preparation
Note! Switch off the wheelchair via remote control (power wheelchair only).

Instructions
Note! Suitable work area required!
Note! Before mounting the manually reclining backrest you have to remove the angle adjustable backrest.
See § 5.3.3.
- Follow the illustrated instructions for mounting the manually reclining backrest.
- Rebuild afterwards the wheelchair in reversed order.

Relevant article numbers
- 1010964 Backrest slider right gas spring

Tools used

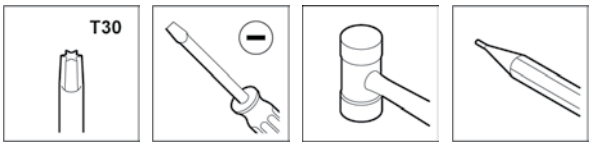

1

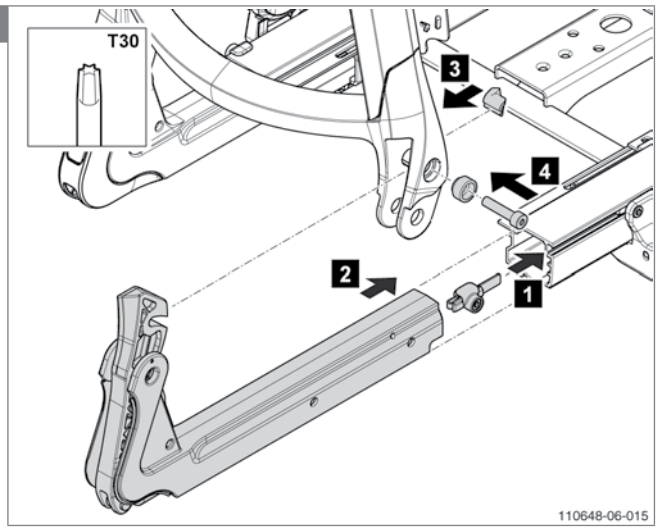

2

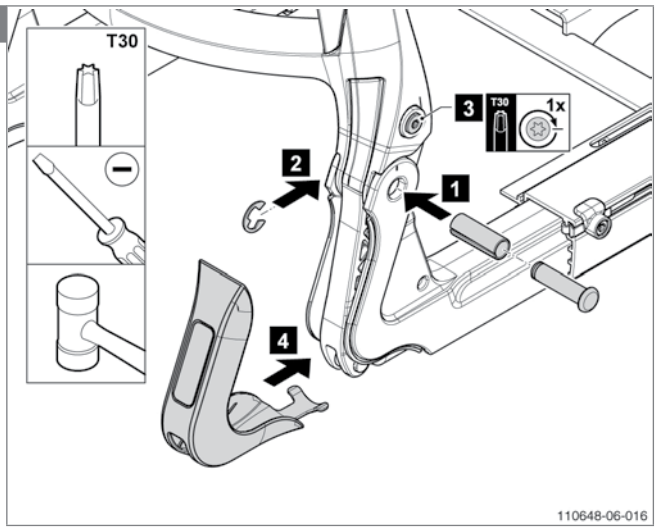

3

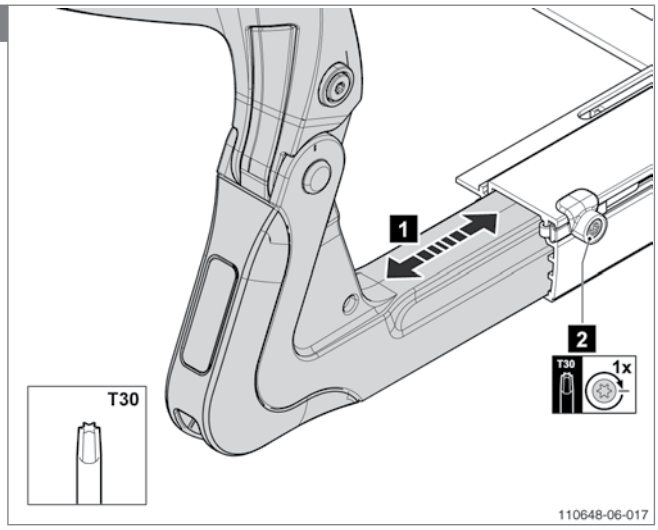

Mounting the electrically reclining backrest

Preparation
Note! Switch off the wheelchair via remote control (power wheelchair only).

Instructions
Note! Suitable work area required!
Note! Before mounting the electrically reclining backrest you have to remove the angle adjustable backrest.
See § 5.3.3.
- Follow the illustrated instructions for mounting the electrically reclining backrest.
- Rebuild afterwards the wheelchair in reversed order.

Relevant article numbers
- 1010965 Backrest slider electrical

Tools used

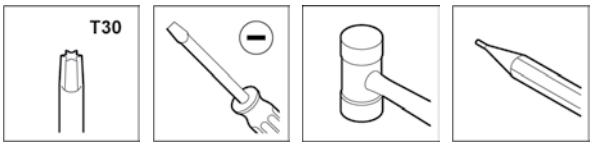

1

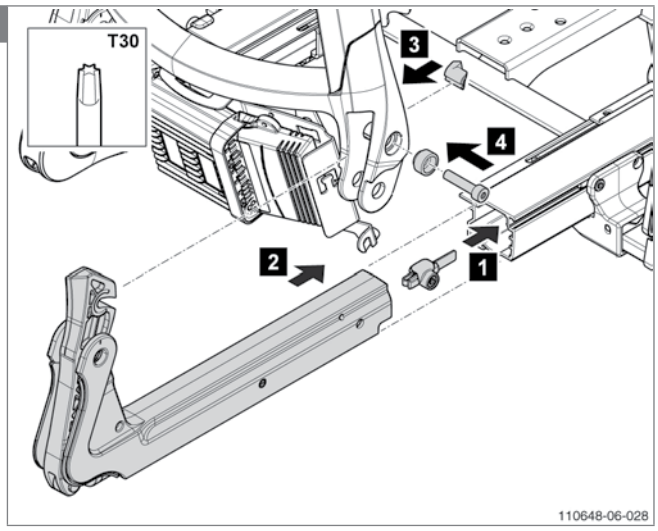

2

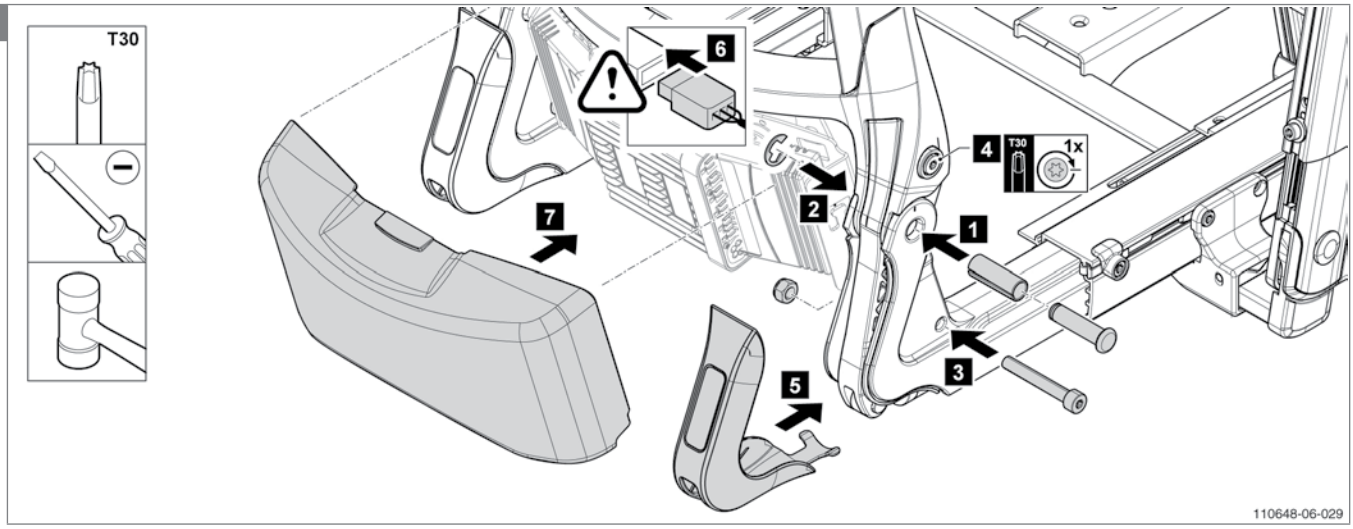

3

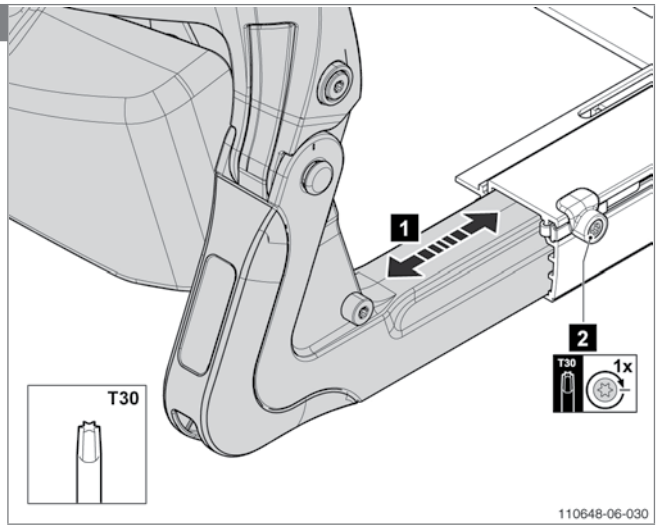

5.3.4 Mounting the push bars

Replacing the height adjustable push bars, or mounting the angle adjustable push bar (manual wheelchair only).

Preparation
N.a.

Instructions
Note! Suitable work area required!
- Follow the illustrated instructions for replacing the height adjustable push bars or mounting the angle adjustable push bars.
- Rebuild afterwards the wheelchair in reversed order.
- In case you mount the push bar for the first time, remove both covers backrest frame.

Relevant article numbers
- 1010890 Push handle left
- 1010891 Push handle right
- 1010998 Push bar, angle adjustable
- 1010893 Push handle locking clip
- 1010894 Wing screw, M6 x 25 (10 pieces)

Tools used

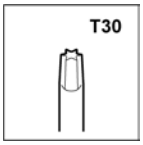

1
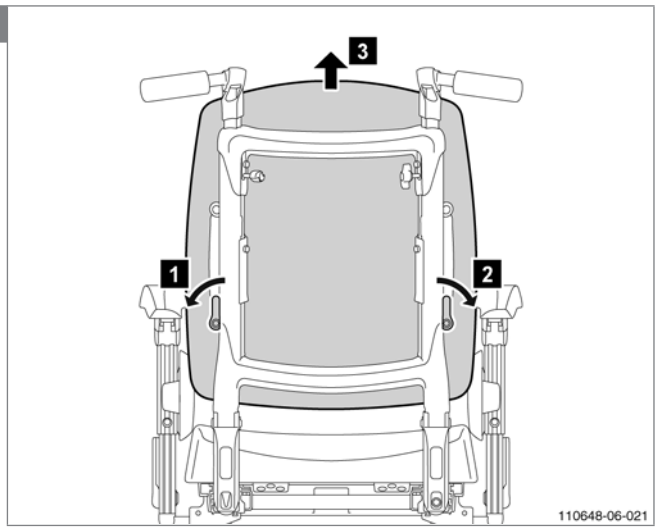

2
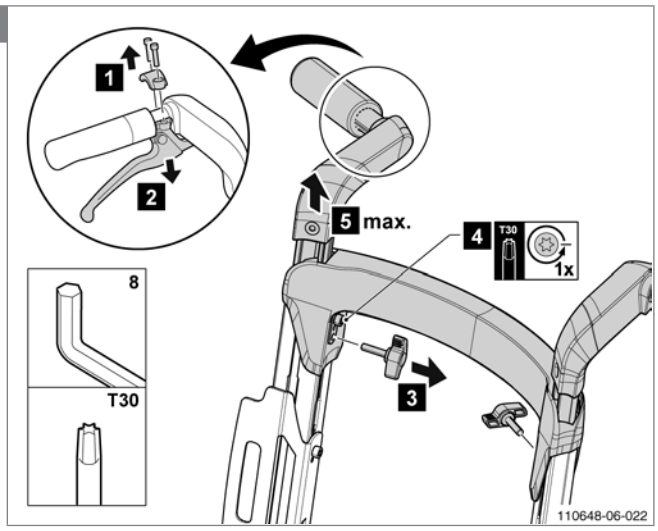

3
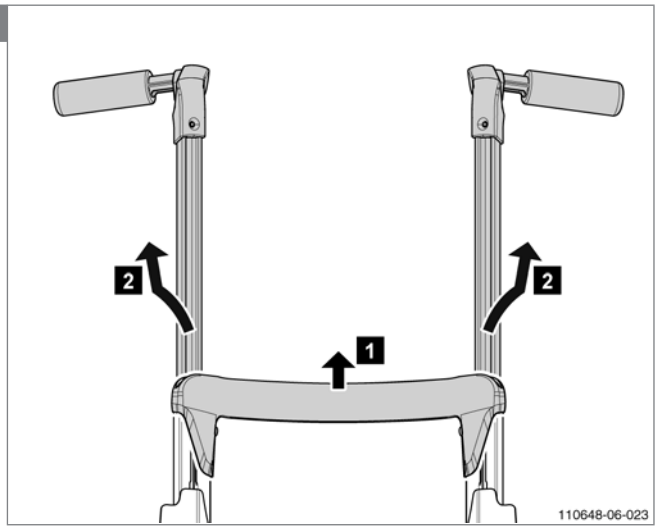

4
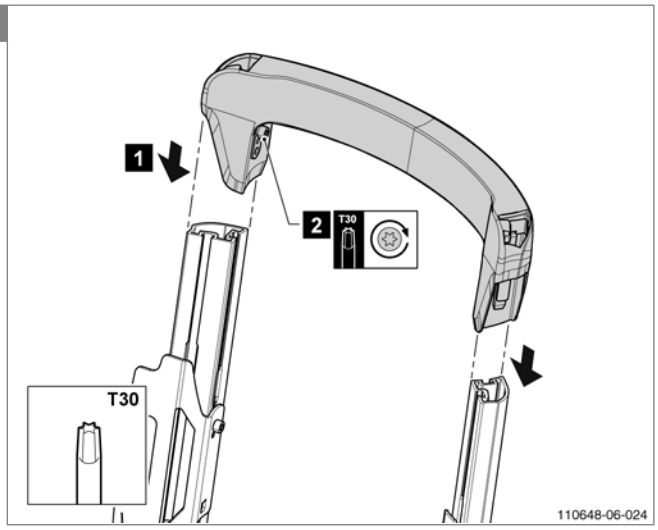

5

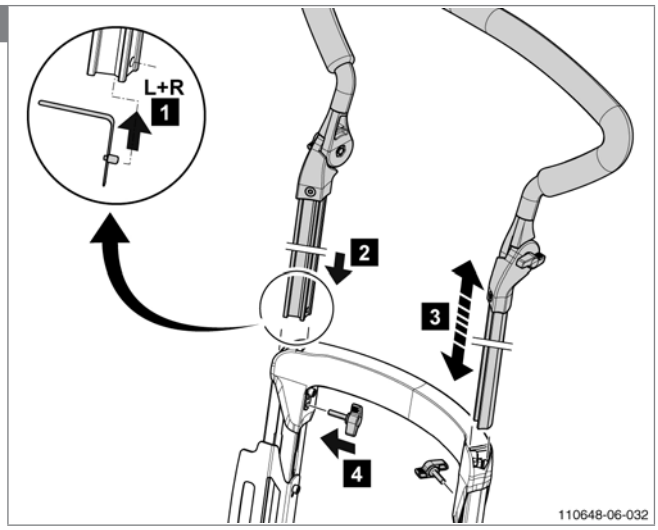

Note! Be sure you mount the two push handle locking clips.

Mounting the push bar for attendant control (power wheelchair only).

Preparation
Note! Switch off the wheelchair via remote control (power wheelchair only).

Instructions
Note! Suitable work area required!
- Follow the illustrated instructions for mounting the adjustable push bar for attended control.
- Rebuild afterwards the wheelchair in reversed order.

Relevant article numbers
- 1012272 Push bar for attended control
- 1010893 Push handle locking clip
- 1010894 Wing screw, M6 x 25 (10 pieces)

Tools used

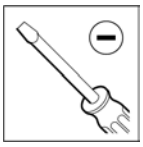

1

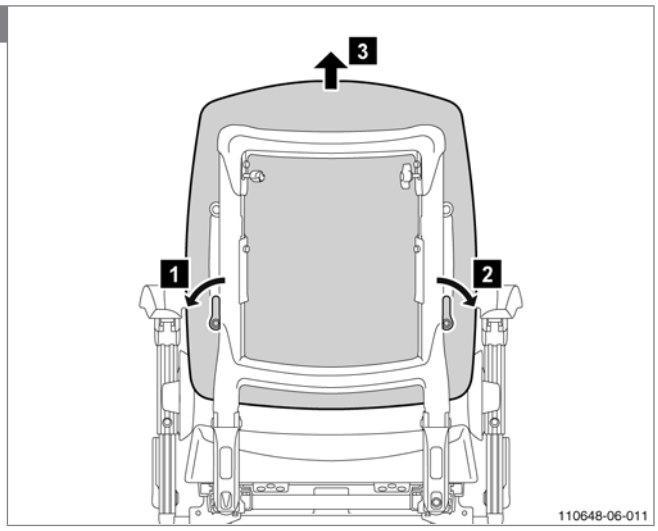

2

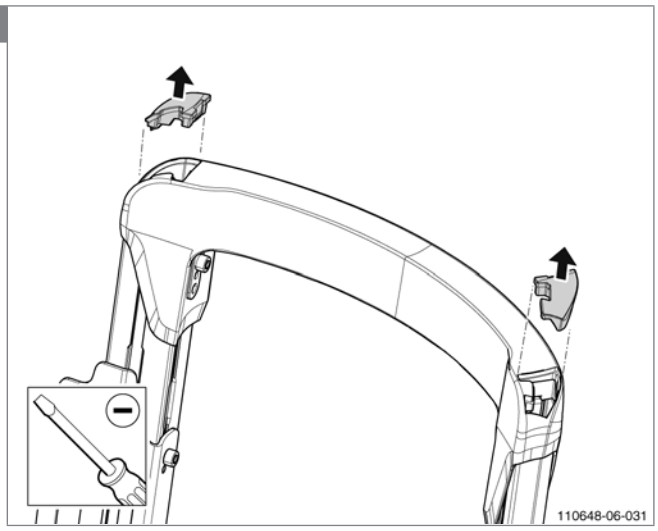

3

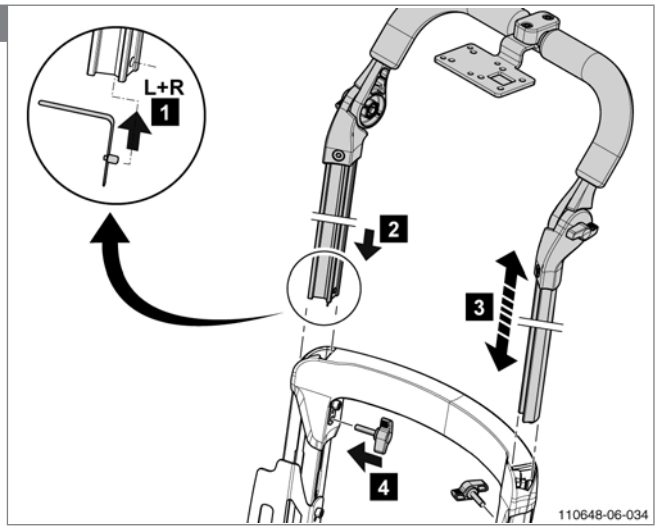

5.3.5 Adjusting or mounting the seat cushion fixation set

Preparation
Note! Switch off the wheelchair via remote control (power wheelchair only).

Instructions
Note! Suitable work area required!
- Follow the illustrated instructions for adjusting or mounting the seat cushion fixation.

Relevant article numbers
- 1010953 Seat cushion fixation set
- 1012267 Interface board Sedeo Original

Tools used

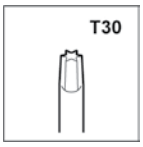

Notice
Ex-factory the fixation brackets on the cushion or seat are always mounted in the middle position! In case you want to reposition the seat cushion, place the fixation brackets at the front and backside always in the same holes! The seat board Sedeo Lite SD40 has only two positions. Ex-factory the fixation brackets on the seat board are mounted in the back position.

1

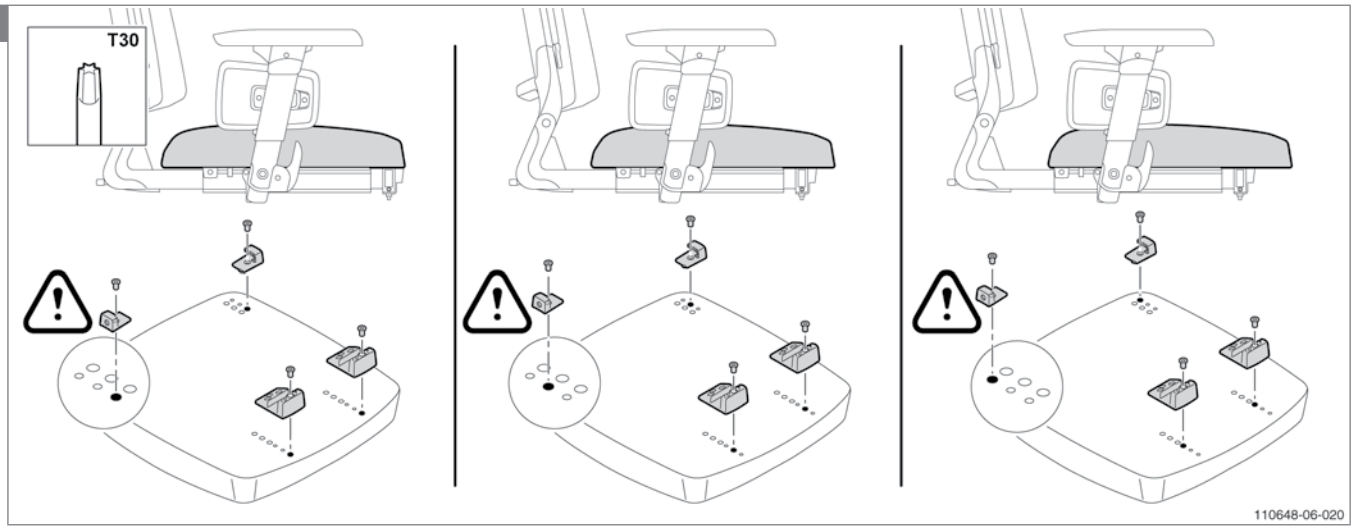

5.3.6 Mounting the backrest cushion fixation set

Preparation
Note! Switch off the wheelchair via remote control (power wheelchair only).

Instructions
Note! Suitable work area required!
- Follow the illustrated instructions for mounting the backrest seat cushion fixation set.
- Rebuild afterwards the wheelchair in reversed order.

Relevant article numbers
- 1010889 Backrest mounting set

Tools used

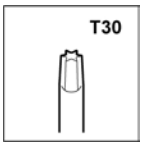

1

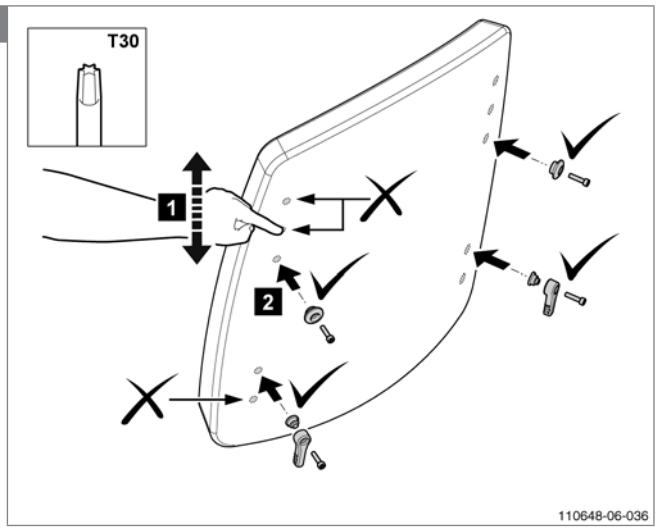

Note! Define by feeling the lowest hole at the top of the frame and the highest hole at the bottom of the frame. The unused holes are intended for the Sedeo Original seat frame!

5.3.7 Mounting the thoracic supports

Preparation
Note! Switch off the wheelchair via remote control (power wheelchair only).

Instructions
Note! Suitable work area required!
- Follow the illustrated instructions for mounting the thoracic supports.
- Rebuild afterwards the wheelchair in reversed order.

Relevant article numbers
- 1010979 Thoracic support set complete
- 1010978 Thoracic support mounting set
- 1010980 Thoracic support cushion

Tools used

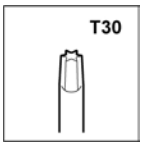

Notice
Some parts needs to be replaced; the replacement is indicated by a symbol.

1

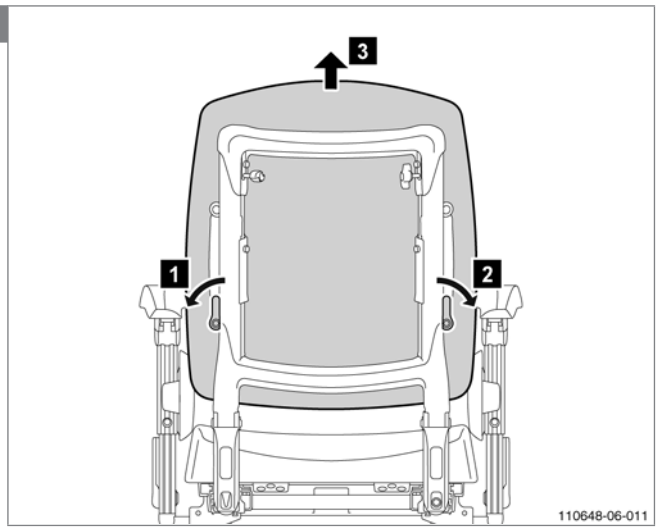

2

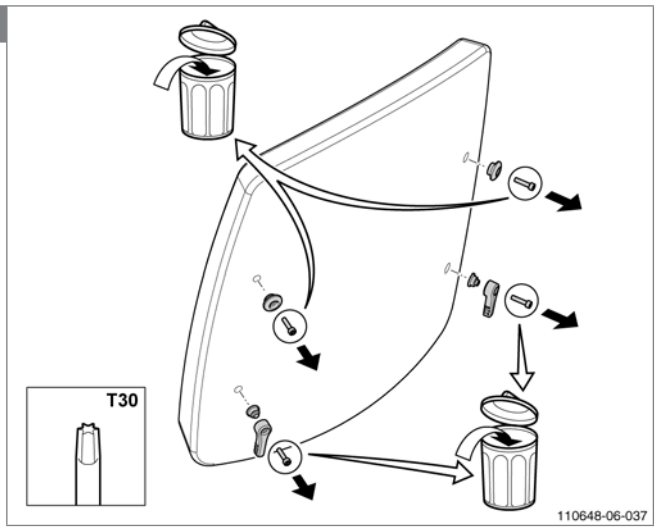

3

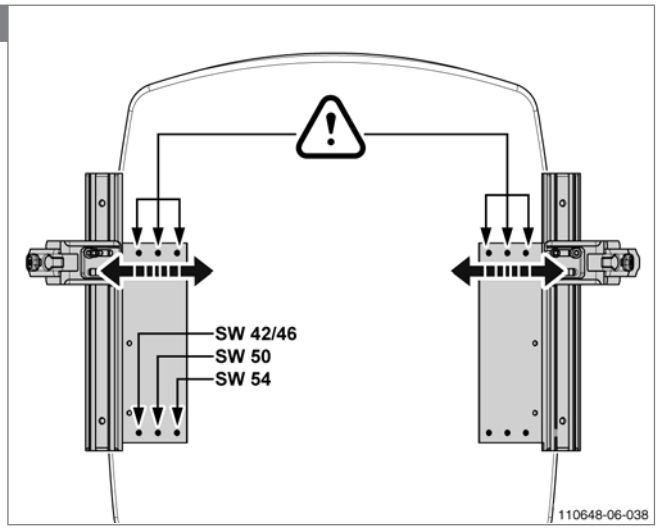

Note! Define the desired width adjustment, taking into account the different width adjustments of the bracket and cushion depths!

4

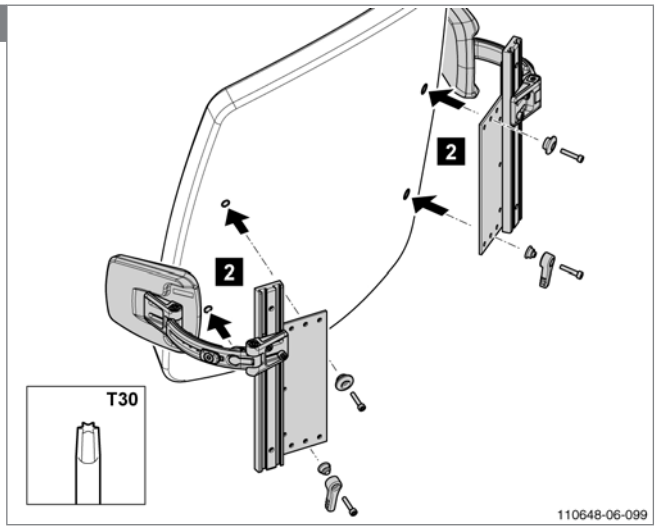

5.3.8 Mounting the standard legrest

Preparation
Note! Switch off the wheelchair via remote control.

Instructions
Note! Suitable work area required!

- Mount the legrest mounting bracket to the seat support frame.
- Release the footplate fixing screw and lower the footplate to remove it from the legrest.
- Position the clamp nuts in the legrest profile and attach the calf plate to the clamp nuts.
- Adjust the calf plate height to the desired position, tighten the clamp nuts.
- Reposition the footplate and tighten the fixing screw. Adjust the calf plate depth to the desired position.
- Adjust the calf plate inwards/outwards to the desired position. Lower the legrest into the tube of the mounting bracket, holding the footplate outwards. Swing the legrest inwards to lock it in position.
  Note! Make sure the locking pin falls in place (with a 'click') and secures the legrest from becoming detached.
  Note! If locking fails: Adjust the screw from the locking mechanism.

Relevant article numbers

1018285 Standard legrest RHS SW 42-46
1018288 Standard legrest LHS SW 42-46
1018286 Standard legrest RHS SW 50
1018289 Standard legrest LHS SW 50
1018287 Standard legrest RHS SW 54
1018290 Standard legrest LHS SW 54

Tools used

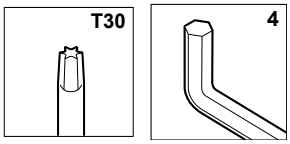

1

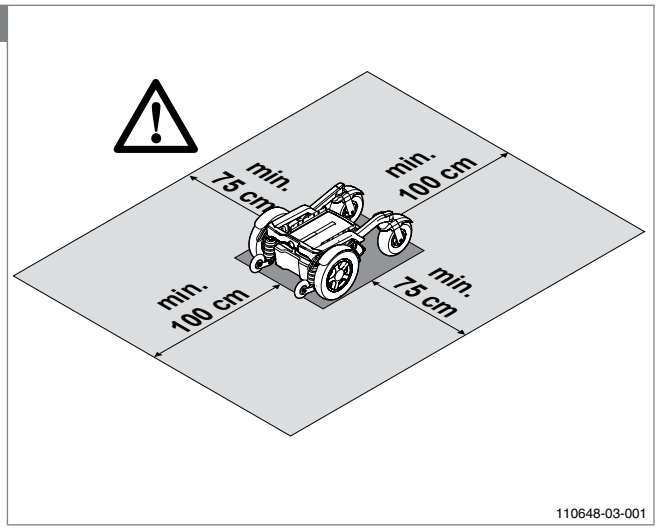

2

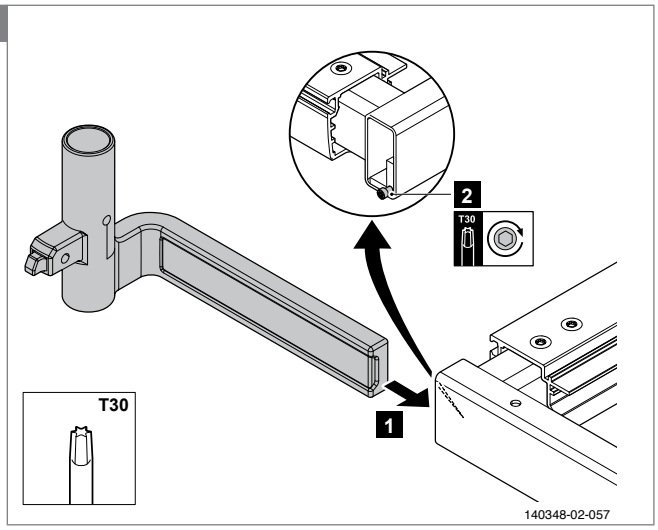

3

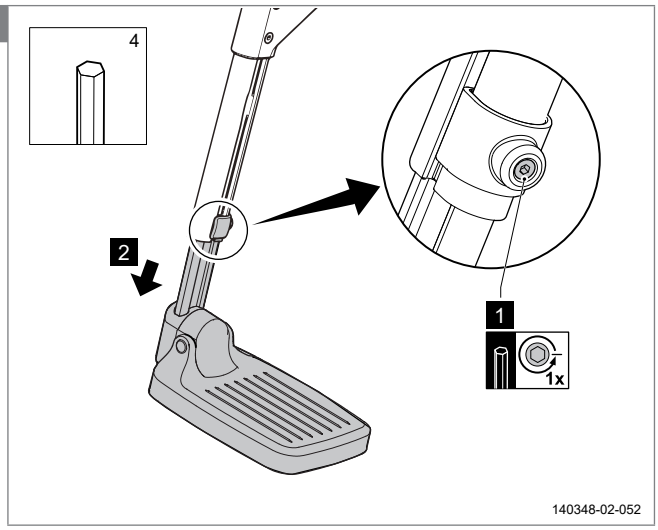
4
2
1
1x
140348-02-052

4

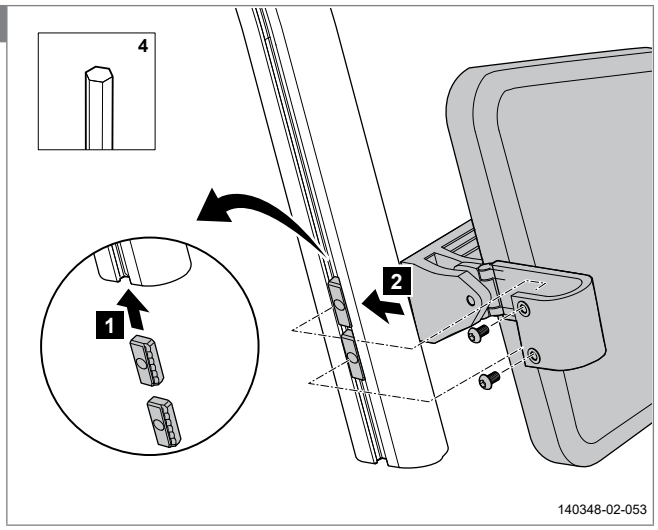
4
1
2
140348-02-053

5

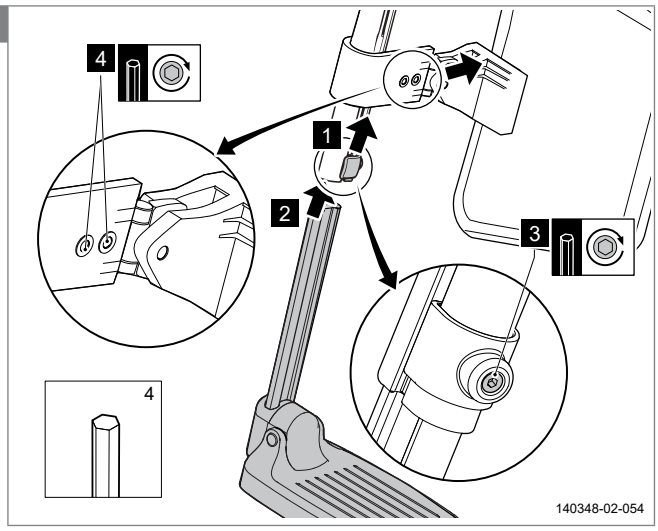
4
1
2
3
4
140348-02-054

6

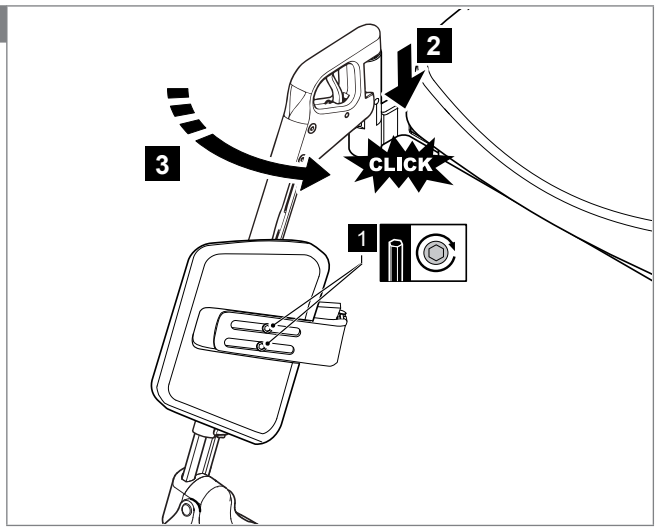
2
3
CLICK
1

5.3.9 Mounting the manually elevating legrest

Preparation
Note! Switch off the wheelchair via remote control.

Instructions
Note! Suitable work area required!
- Mount the legrest mounting bracket to the seat support frame.
- Secure the legrest in its upper position.
- Release the footplate fixing screw and lower the footplate to remove it from the legrest.
- Unscrew the lower clamp of the damper unit.
- Position the clamp nuts in the legrest profile and attach the calf plate to the clamp nut.
- Adjust the calf plate height to the desired position, tighten the clamp nuts.
- Remount the lower clamp of the damper unit.
- Reposition the footplate and tighten the fixing screw. Adjust the calf plate depth to the desired position.
- Adjust the calf plate inwards/outwards to the desired position. Lower the legrest into the tube of the mounting bracket, holding the footplate outwards. Swing the legrest inwards to lock it in position.

Note! Make sure the locking pin falls in place (with a 'click') and secures the legrest from becoming detached.
Note! If locking fails: Adjust the screw from the locking mechanism.

Relevant article numbers
1018305 Manually elevating legrest set with calfplates SW 42-46
1018291 Manually elevating legrest RHS SW 42-46 cm
1018294 Manually elevating legrest LHS SW 42-46 cm
1018293 Manually elevating legrest RHS SW 54 cm
1018295 Manually elevating legrest LHS SW 50 cm
1018292 Manually elevating legrest RHS SW 50 cm
1018296 Manually elevating legrest LHS SW 54 cm

Tools used

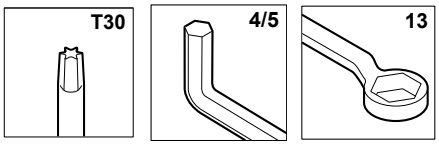

1
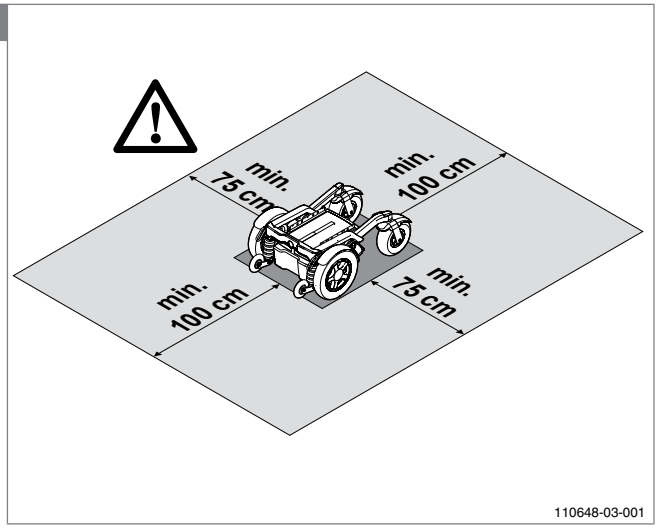

2
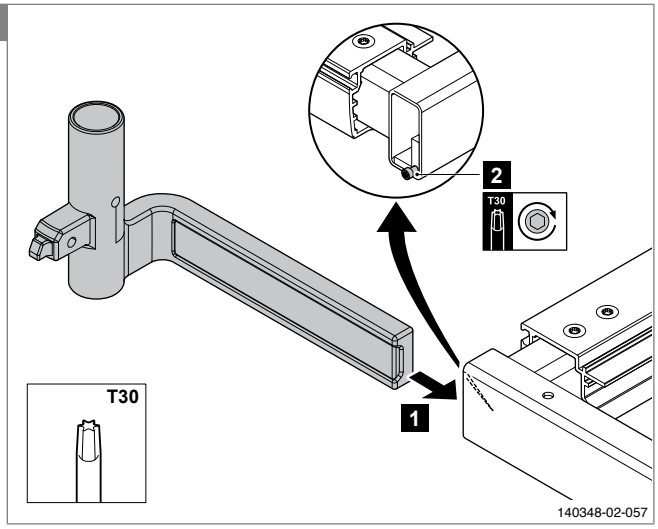

3

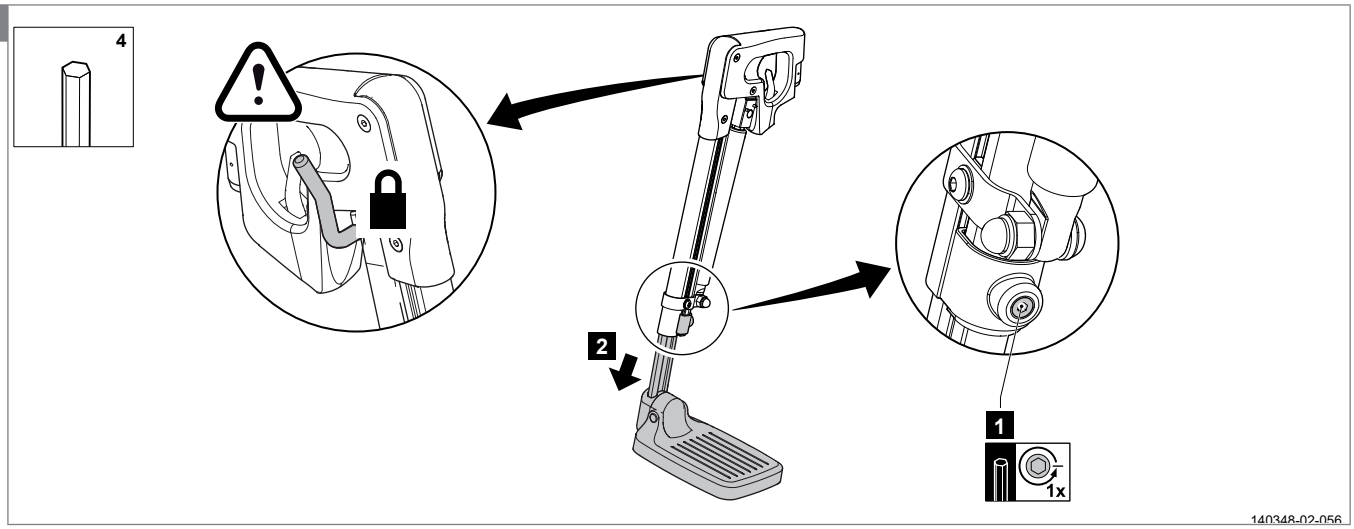
4
2
1
1x
140348-02-056

4

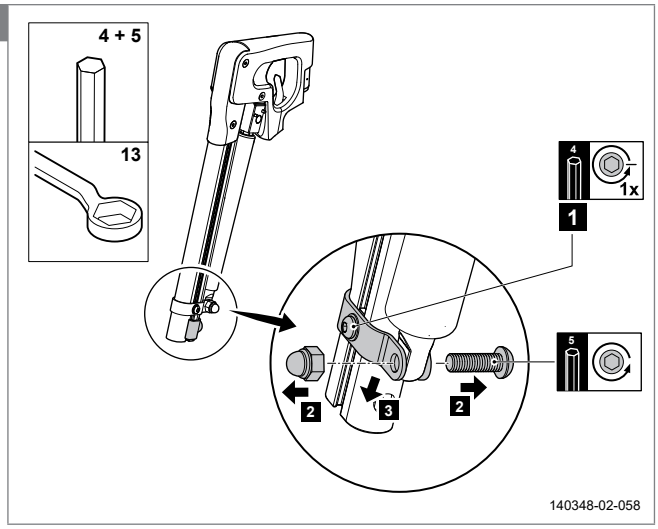
4 + 5
13
4
1x
1
5
2
3
2
140348-02-058

5

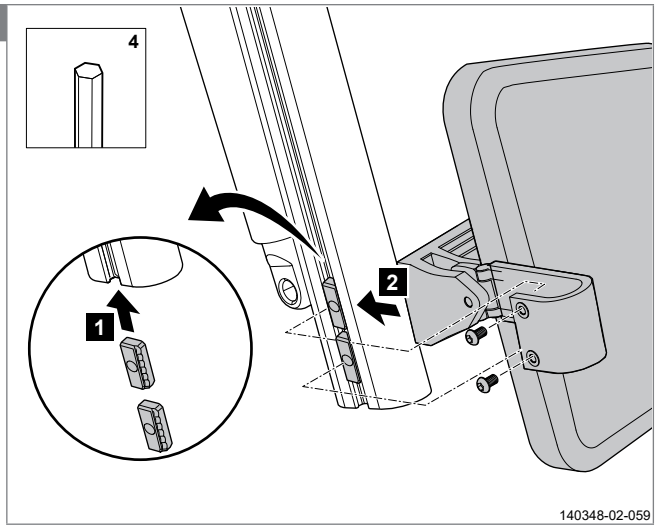
4
1
2
140348-02-059

6

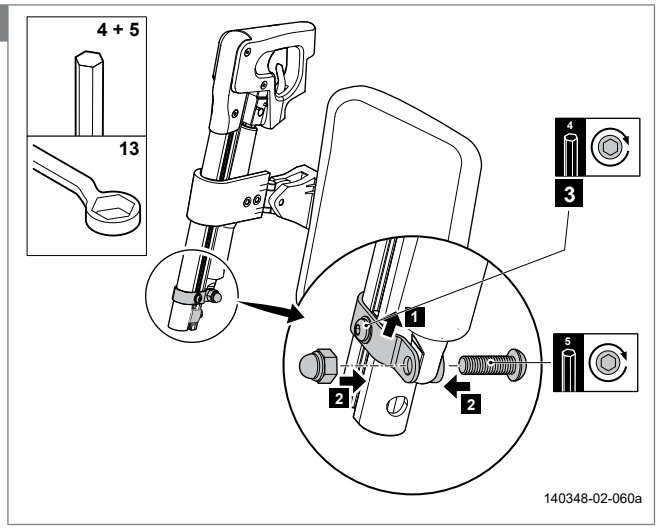
4 + 5
13
4
3
1
5
2
2
140348-02-060a

7

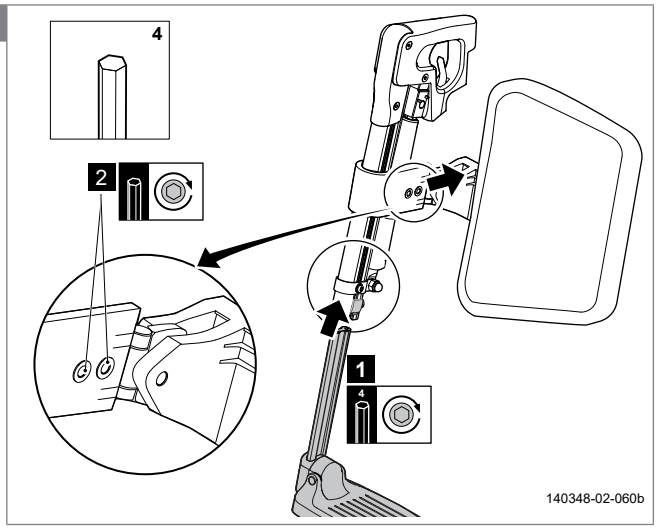
4
2
1
4
140348-02-060b

8

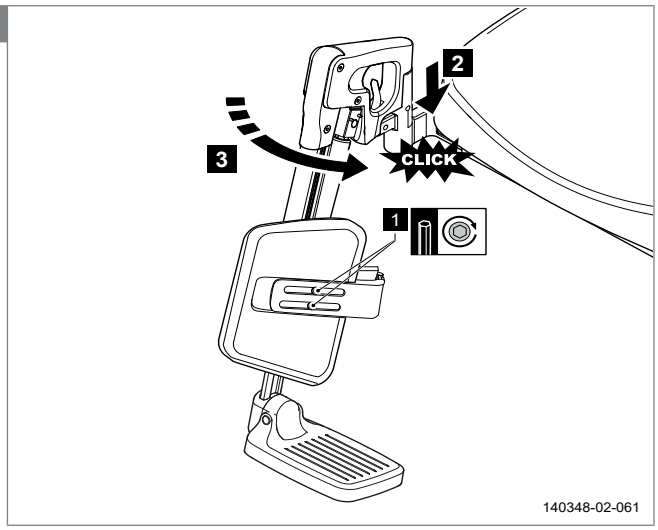

5.3.10 Mounting the electrically elevating legrest

Preparation
Note! Switch off the wheelchair via remote control.

Instructions
Note! Suitable work area required!

- Remove seat and legrests.
- Place cable with plug from the top downwards into the tube from the legrest support. Secure the plug.
- Attach the connectors to the cables.
  Note! Attach the brown cable to connector position with the (dot-) marking.
- Attach the cable extensions to the connectors and control box.
  Note! See the backside of the control box cover for a wiring diagram.
- Release the footplate fixing screw and lower the footplate to remove it from legrest.
- Unscrew the lower clamp of the damper unit.
- Position the clamp nuts in legrest profile and attach the calf plate to the clamp nuts.
- Adjust the calf plate height to the desired position, tighten the clamp nuts.
- Remount the lower clamp of the damper unit.
- Reposition the footplate and tighten the fixing screw. Adjust the calf plate depth to the desired position.
- Adjust the calf plate inwards/outwards to the desired position. Lower the legrest into the tube of the mounting bracket, holding the footplate outwards. Swing the legrest inwards to lock it in position.
  Note! Make sure the locking pin falls in place (with a 'click') and secures the legrest from becoming detached.
  Note! If locking fails: Adjust the screw from the locking mechanism.

Relevant article numbers
1018306 Electrically elevating legrest set with calfplates SW 42-46
1018297 Electrically elevating legrest RHS SW 42-46 cm
1018300 Electrically elevating legrest LHS SW 42-46 cm
1018298 Electrically elevating legrest RHS SW 50 cm
1018301 Electrically elevating legrest LHS SW 50 cm
1018299 Electrically elevating legrest RHS SW 54 cm

Tools used

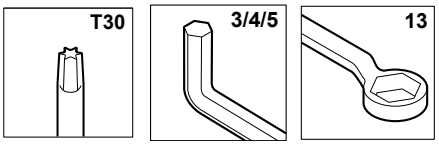

1

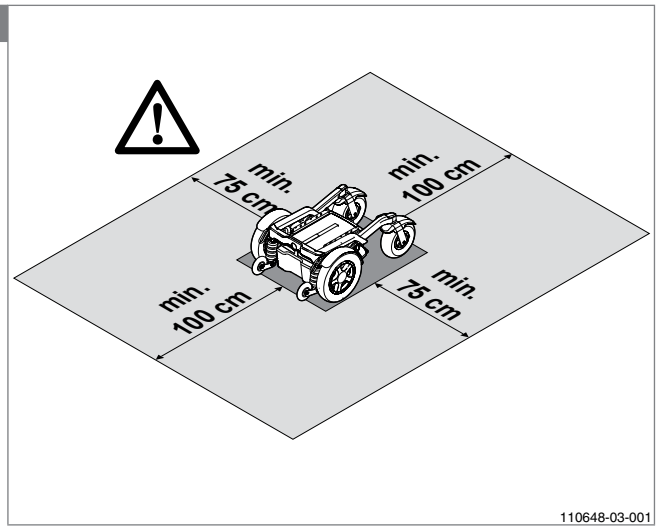

2

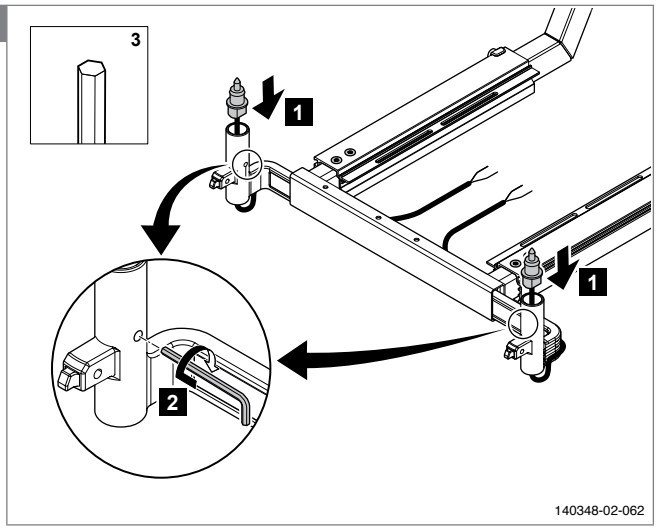

3

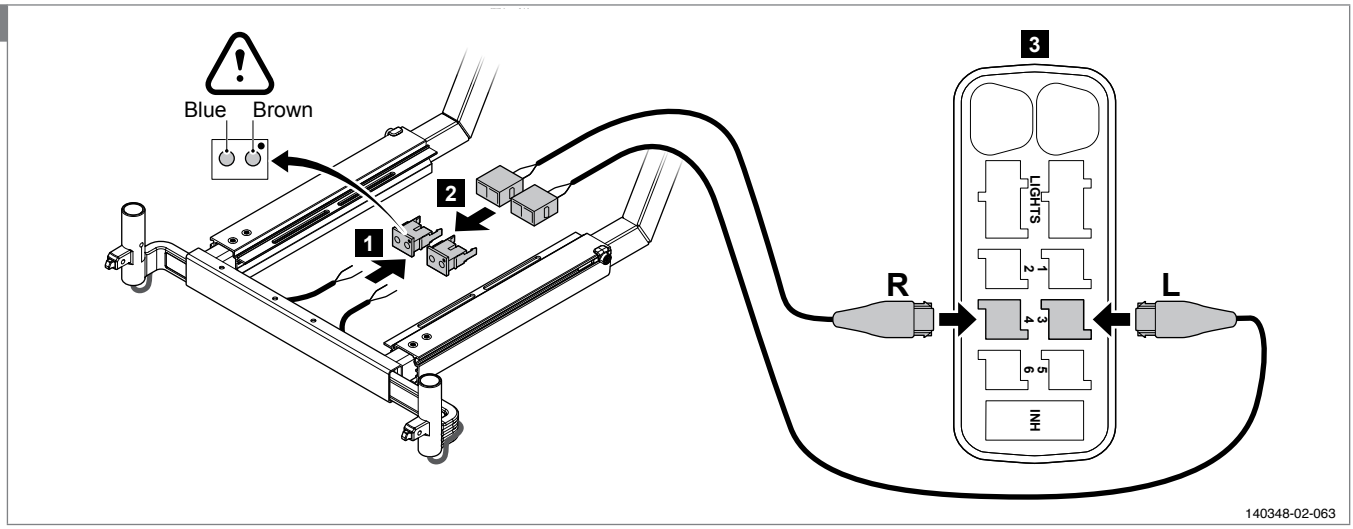
Blue
Brown
1
2
3
R
L
LIGHTS
1
2
3
4
5
6
INH
140348-02-063

4

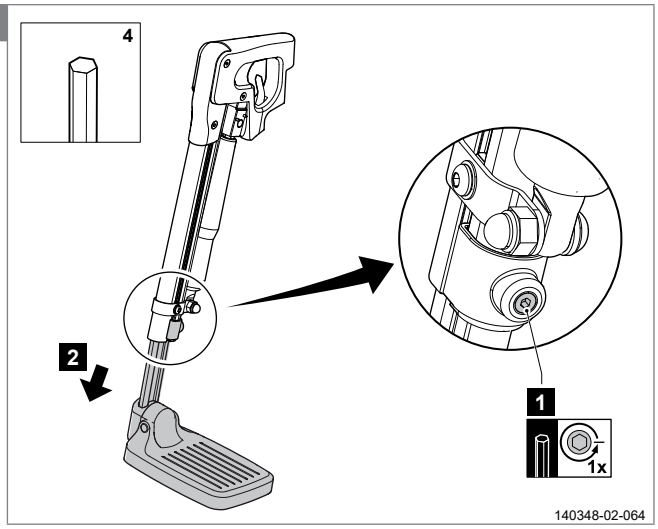
4
2
1
1x
140348-02-064

5

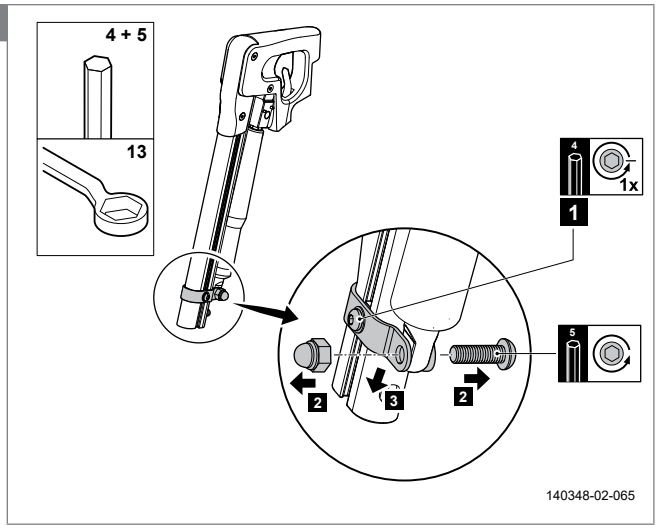
4 + 5
13
4
1x
1
5
2
3
2
140348-02-065

6

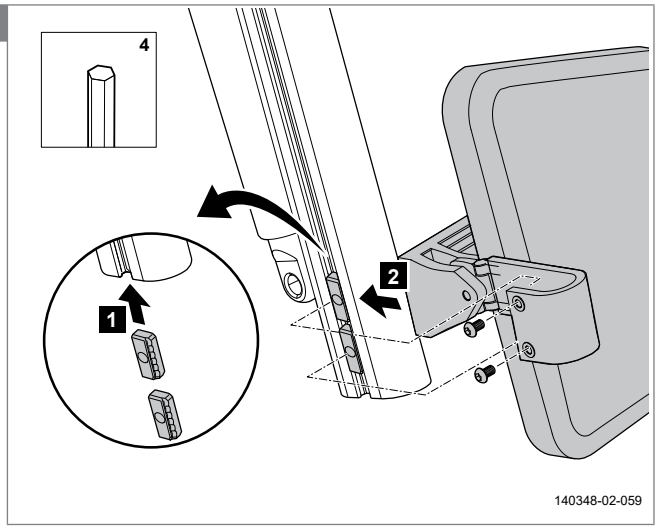
4
1
2
140348-02-059

7

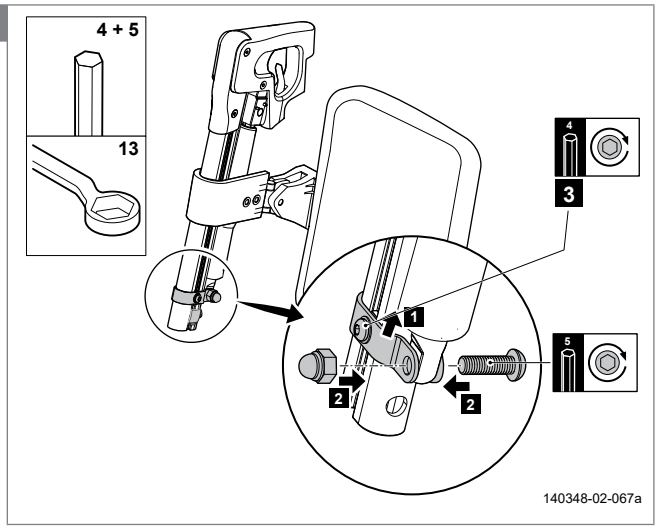
4 + 5
13
4
3
1
5
2
2
140348-02-067a

8

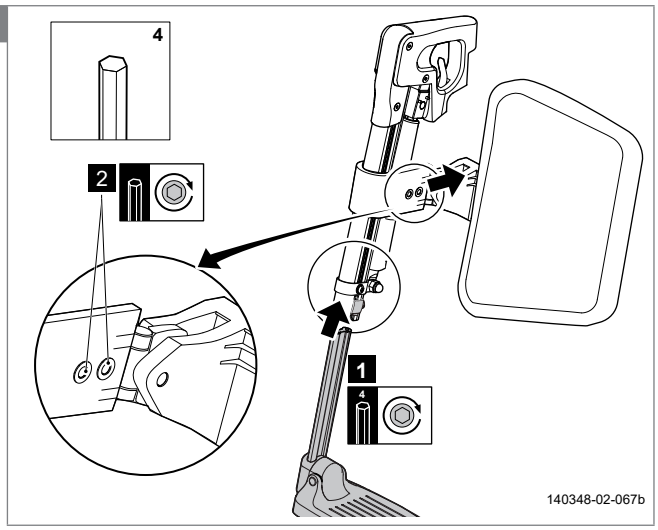

9

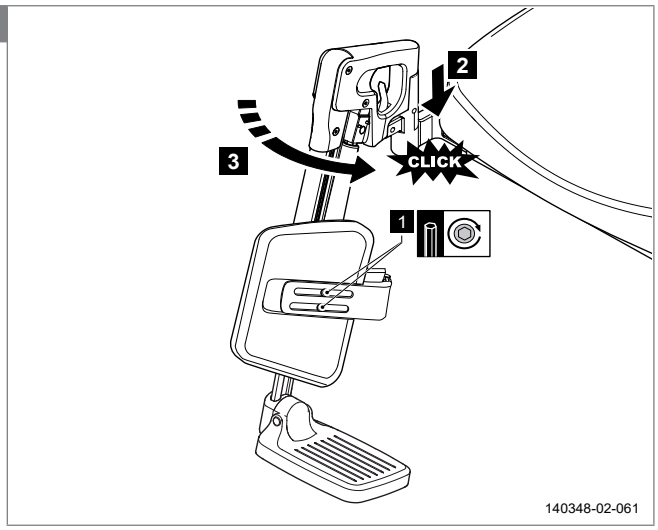

5.3.11 Mounting the (manually elevating) central legrest

Preparation
Note! Switch off the wheelchair via remote control (power wheelchair only).

Instructions
Note! Suitable work area required!
- Follow the illustrated instructions for mounting the manually elevating central legrest
- Adjust the level of friction of the footplate by tightening / unscrewing the Torx on the bottom of the footplate.

Relevant article numbers
- 1011156 Standard central legrest
- 1011157 Standard central legrest with calf plate
- 1011158 Manually elevating central legrest
- 1011159 Manually elevating central legrest with calf plate

Tools used

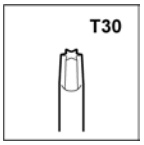

1
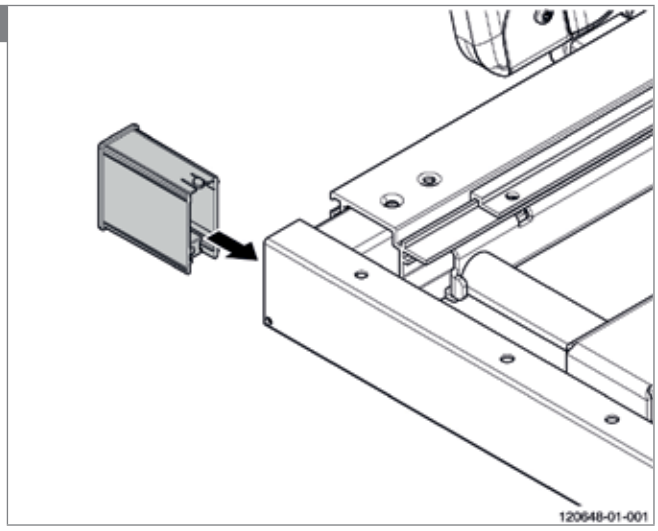

2
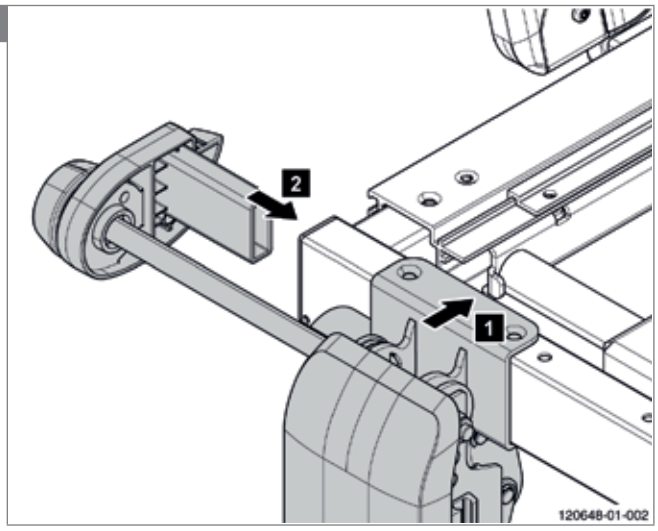

Note! Release the operating lever

3
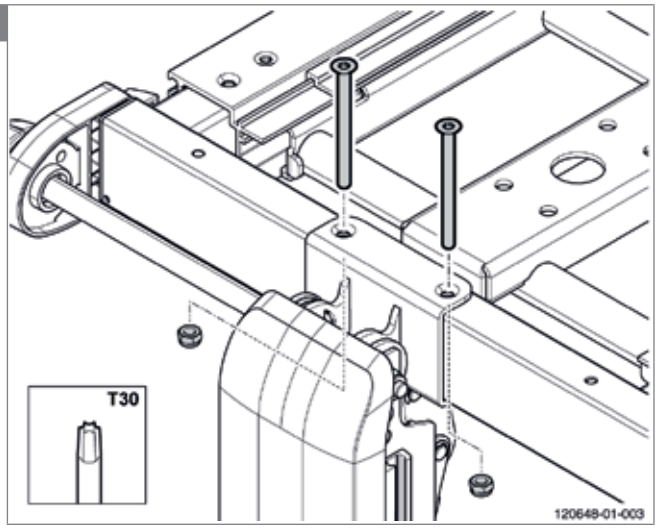

4
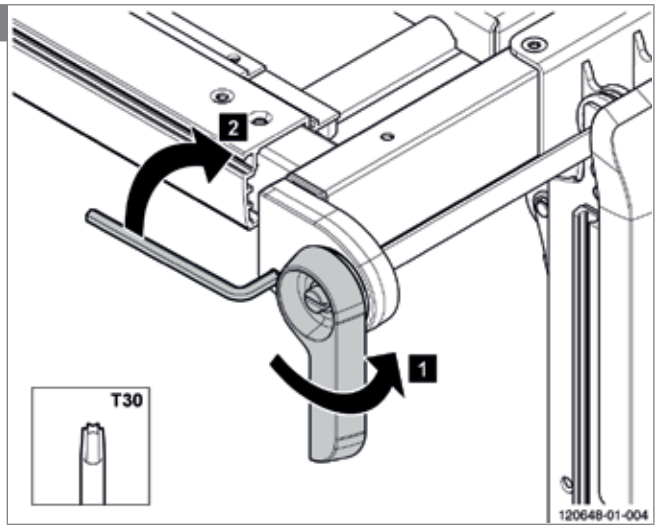

5

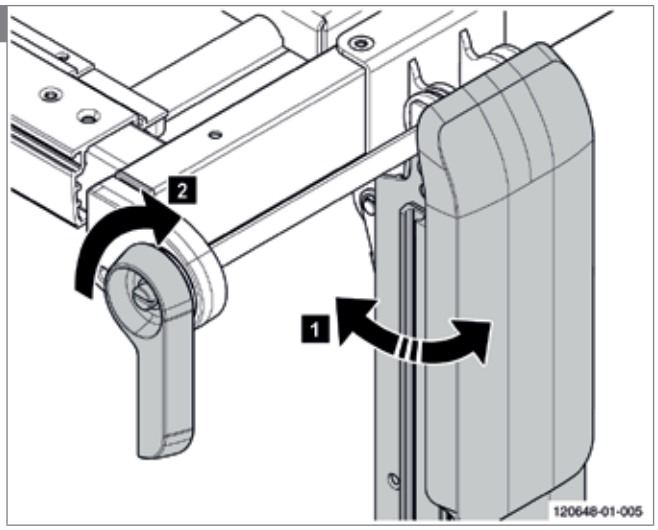

6

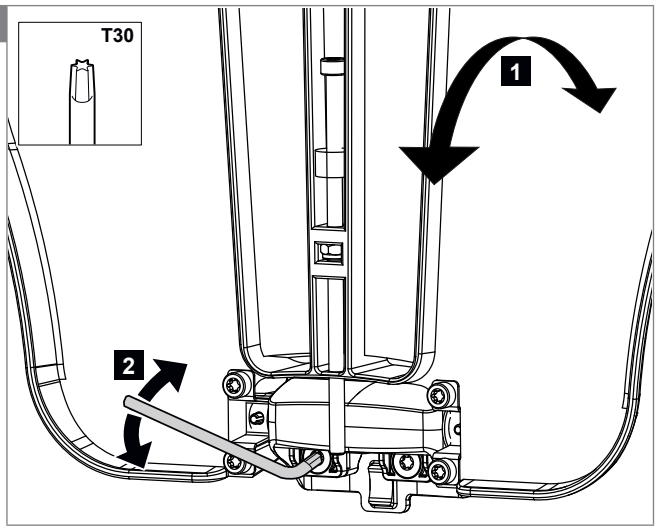

5.3.12 Mounting the electrically elevating central legrest

Preparation
Note! Switch off the wheelchair via remote control.

Instructions
Note! Suitable work area required!
- Remove seat and legrests.
- Unscrew the bolts (4x) that attach the legrest support frame to the seat support frame.
- Release the footplate fixing screw and lower the footplates to remove it from the legrest.
- Screw the calf plate mounting bracket to the central column.
- Mount the calf plates to the mounting bracket.
- Slide the central legrest unit into the front of the seat support frame and secure the central legrest unit with the bolts (4x) on the top and one bolt on either side of the seat support frame.
- Attach cable extensions to connectors and control box

  Note! See backside of control box cover for wiring diagram.
- Hook the seat in place and push it downwards into position.
- **Caution!** Reprogram the controls of the chair.

Relevant article numbers
1016781 Electrically elevating central legrest without calfplates

Tools used

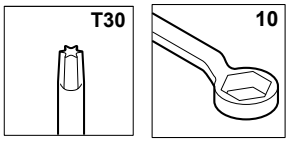

1
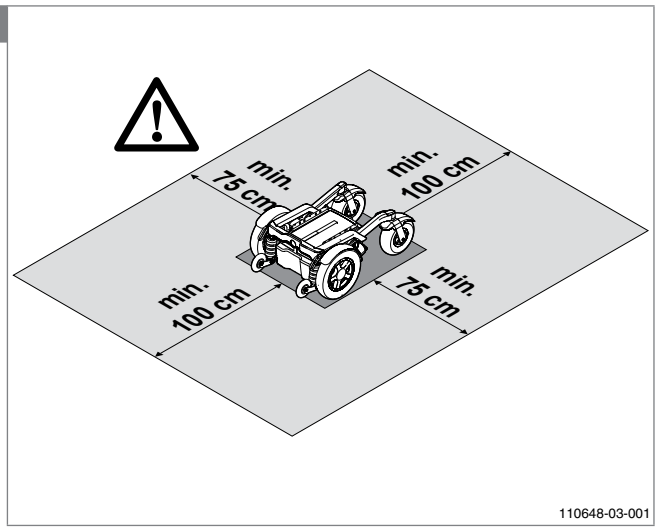

2
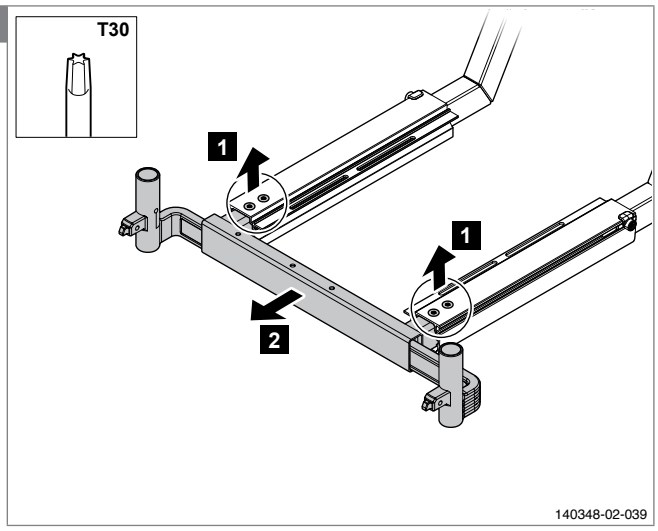

3
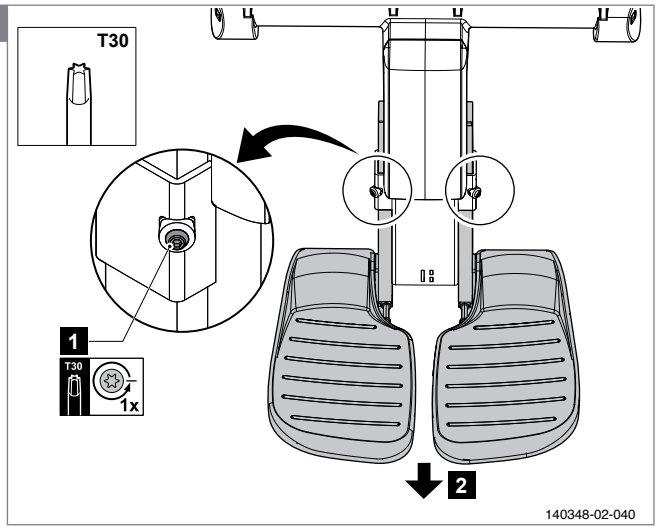

4
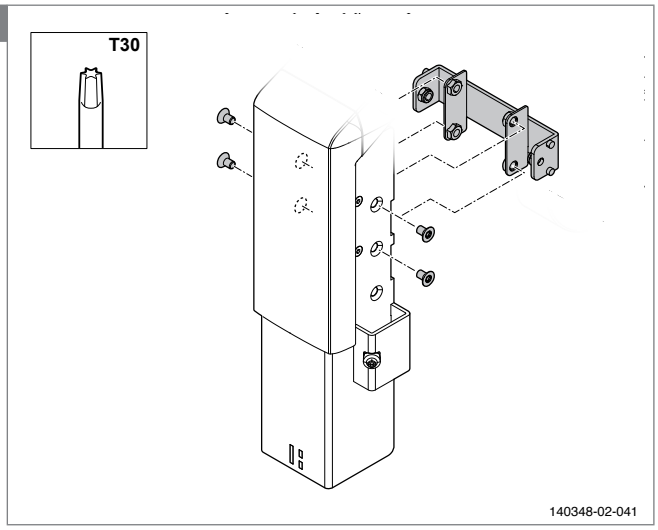

5

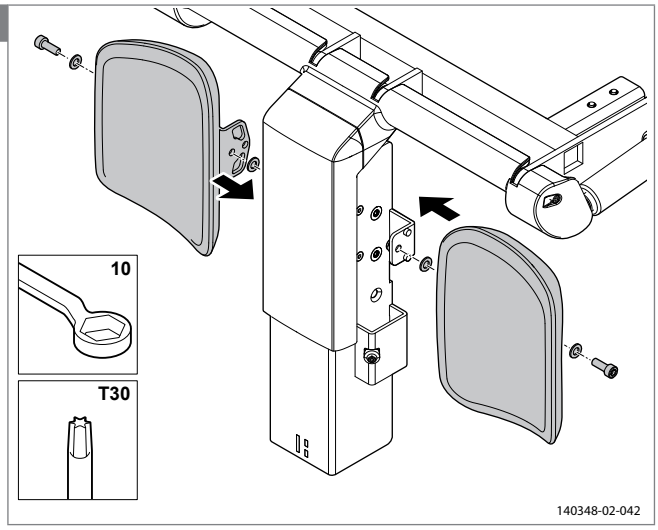
10
T30
140348-02-042

6

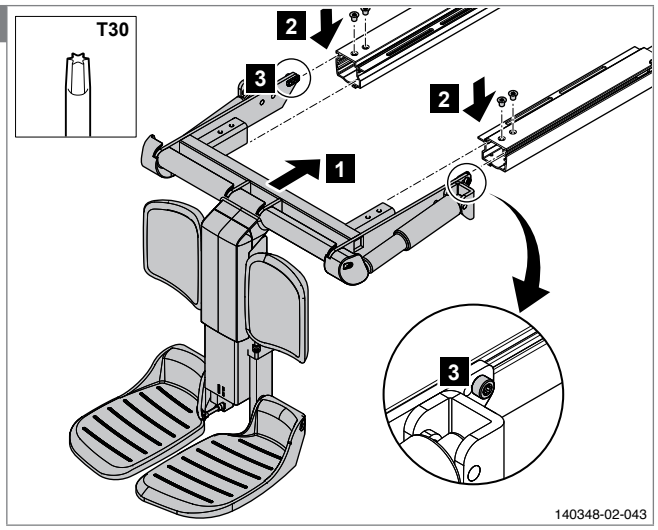
T30
2
3
2
1
3
140348-02-043

7

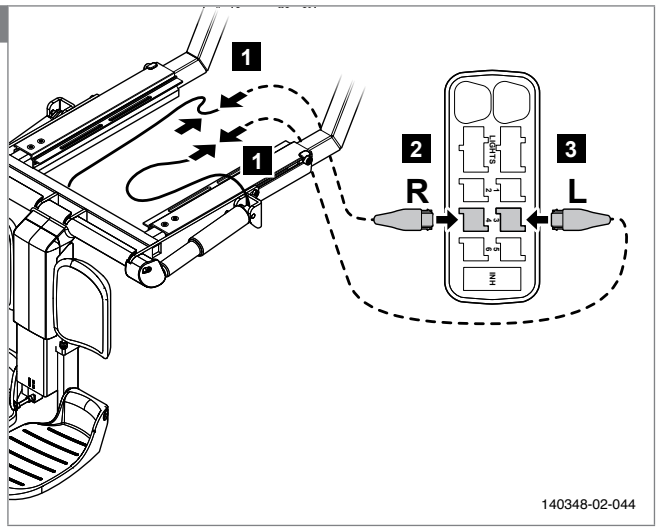
1
1
2
R
3
L
140348-02-044

8

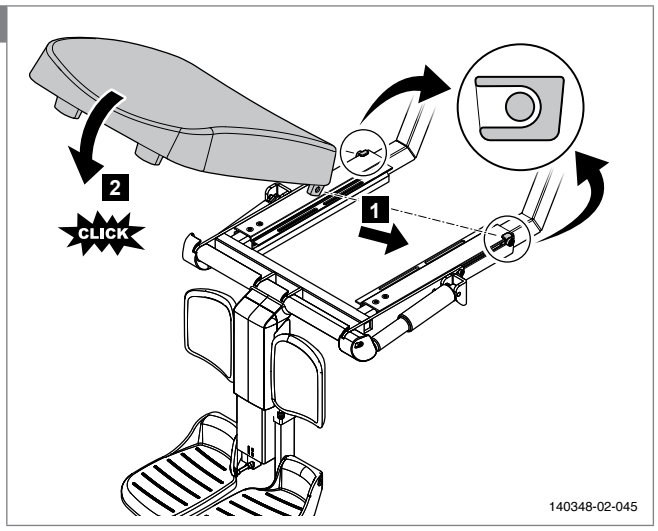
2
CLICK
1
140348-02-045

5.3.13 Replacing the actuators of the electrically elevating central legrest

Preparation
Note! Switch off the wheelchair via remote control.

Instructions
Note! Suitable work area required!
- Remove seat and legrests.
- Unscrew the bolts (4x) that attach the legrest support frame to the seat support frame.
- Release the footplate fixing screw and lower the footplates to remove it from the legrest.
- Screw the calf plate mounting bracket to the central column.
- Mount the calf plates to the mounting bracket.
- Slide the central legrest unit into the front of the seat support frame and secure the central legrest unit with the bolts (4x) on the top and one bolt on either side of the seat support frame.
- Attach cable extensions to connectors and control box

  Note! See backside of control box cover for wiring diagram.
- Hook the seat in place and push it downwards into position.
- **Caution!** Reprogram the controls of the chair.

Relevant article numbers
1016781 Electrically elevating central legrest without calfplates

Tools used

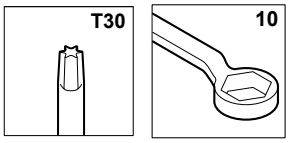

1
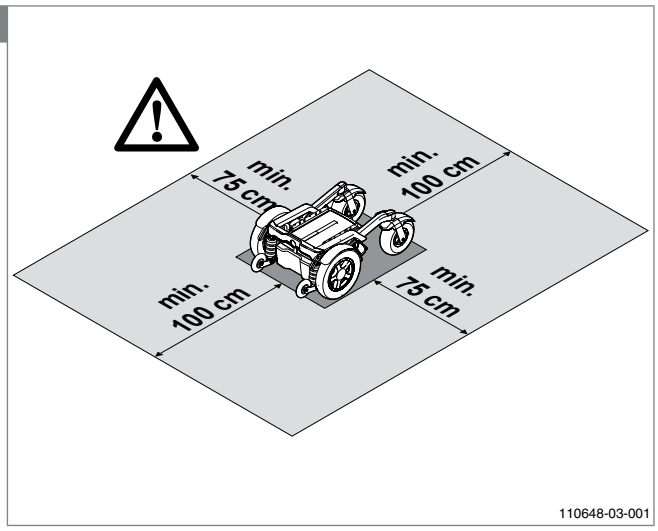

2
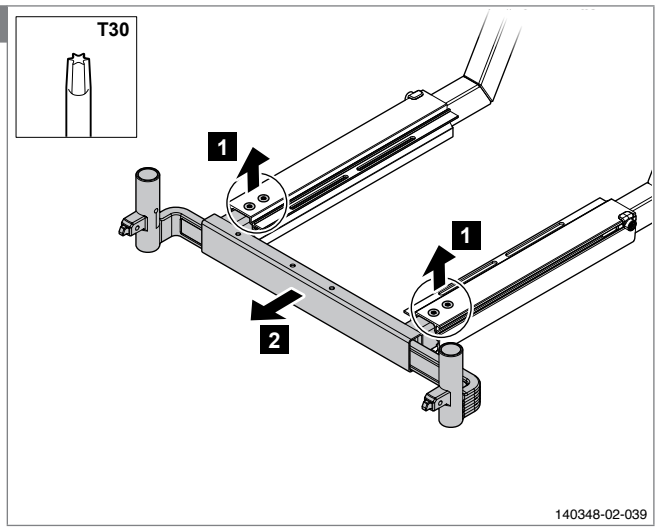

3
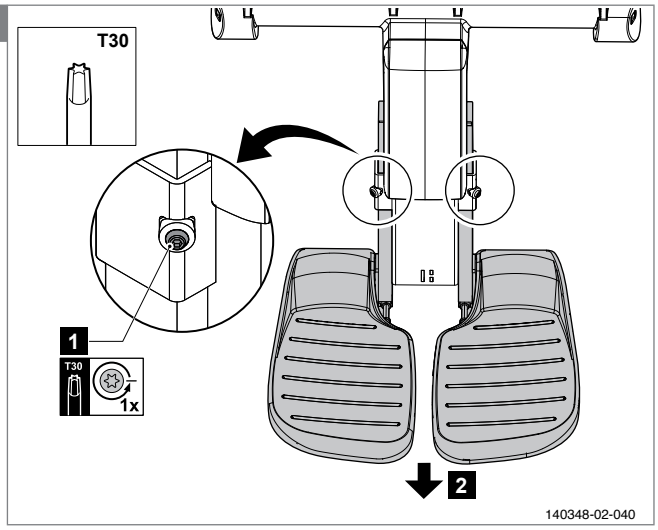

4
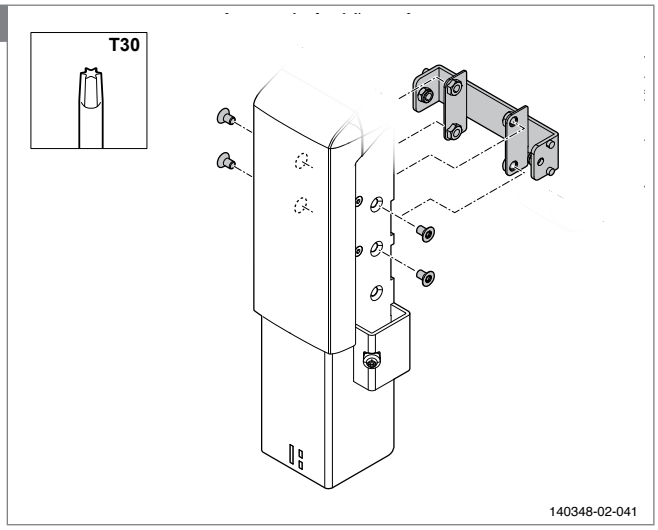

5

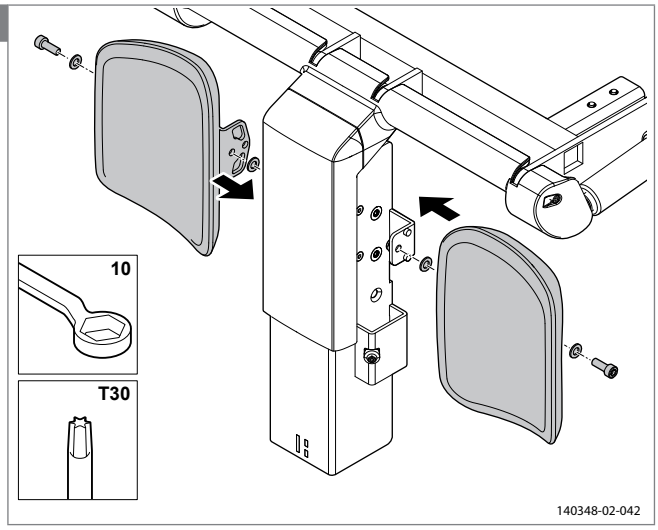
10
T30
140348-02-042

6

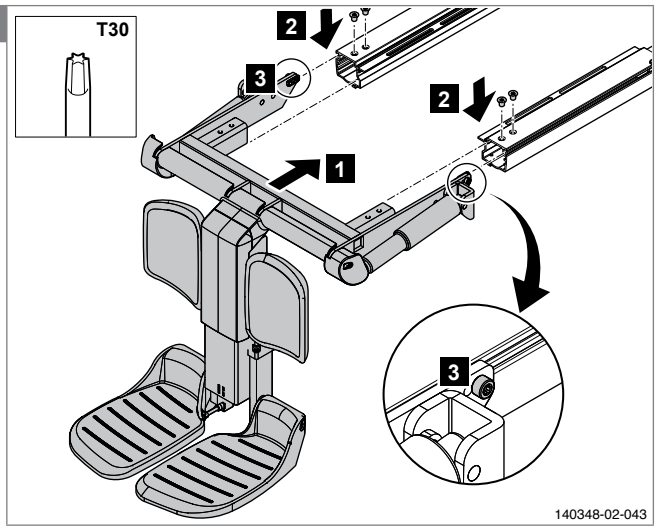
T30
2
3
2
1
3
140348-02-043

7

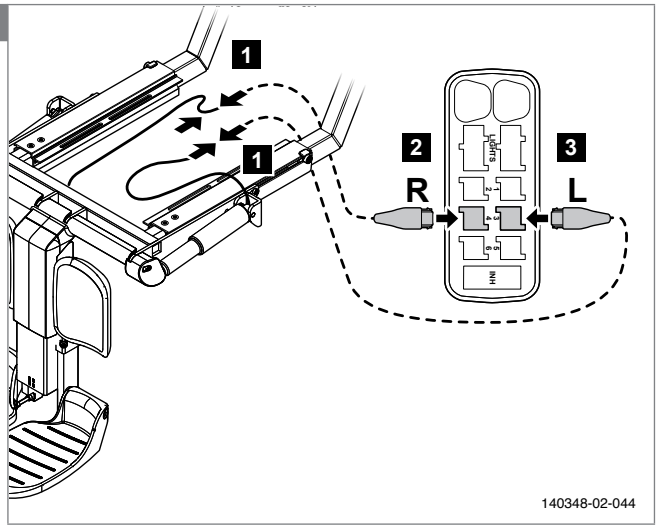
1
1
2
R
3
L
140348-02-044

8

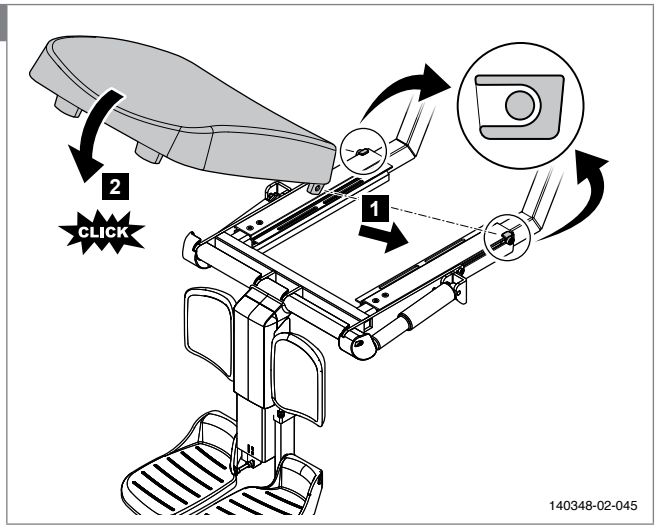
2
CLICK
1
140348-02-045

5.3.14 Replacing the flip up armrest hinge

Preparation
Note! Switch off the wheelchair via remote control (power wheelchair only).

Instructions
Note! Suitable work area required!
Note! This task is a preparation for replacing the flip up armrest hinge.
- Follow the illustrated instructions.
- Rebuild afterwards the wheelchair in reversed order.

Relevant article numbers
- 9007777 Flip up armrest lever

Tools used

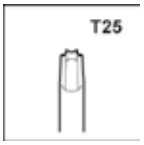

1

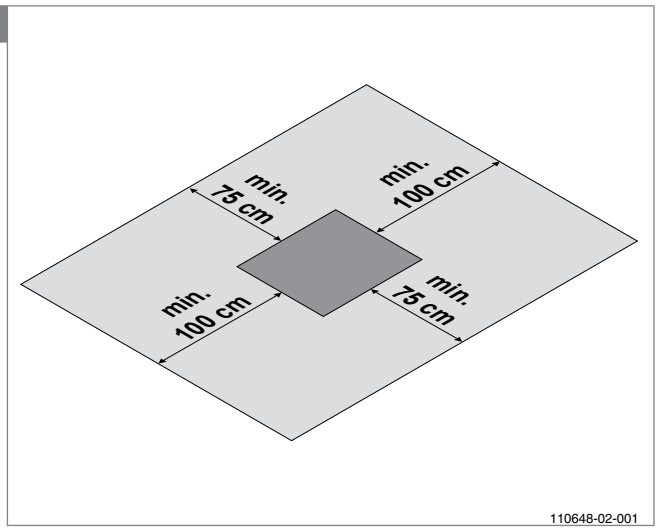

2

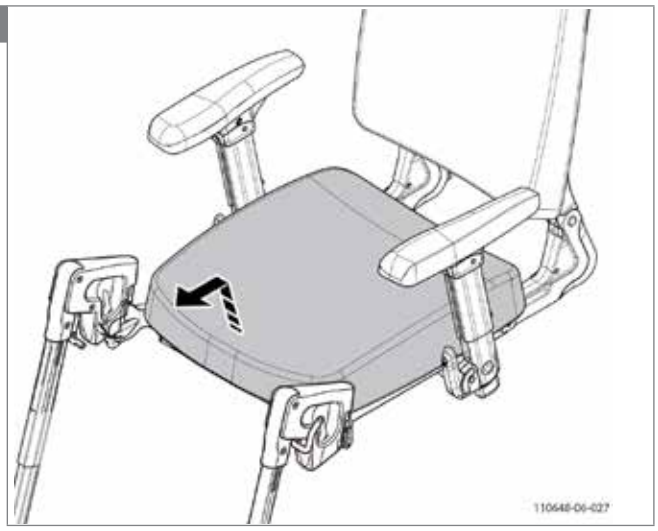

3

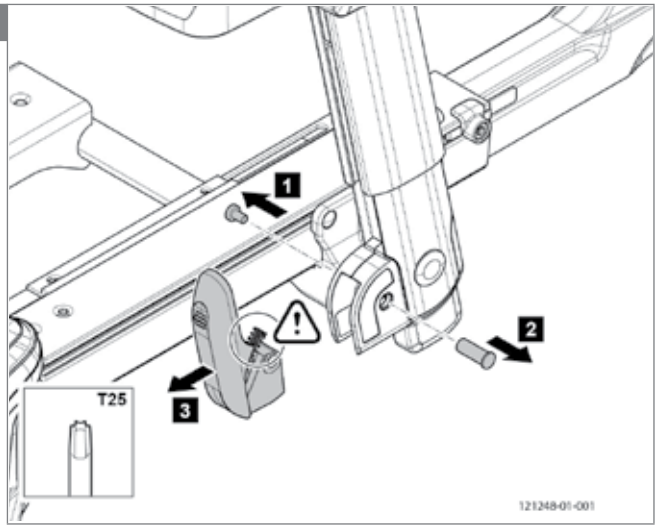

4

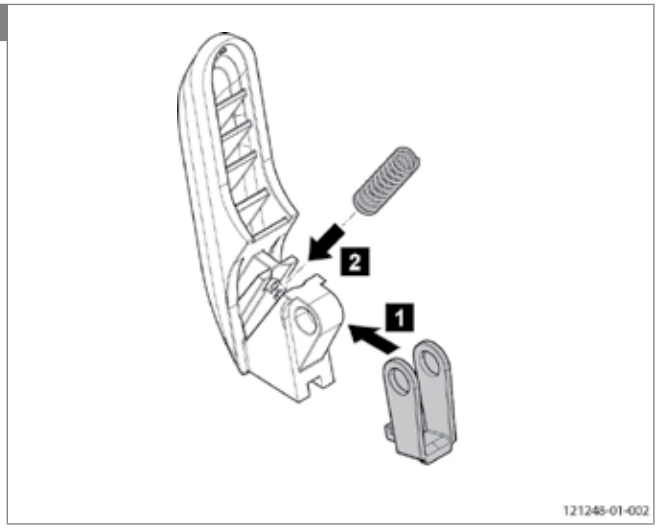

5

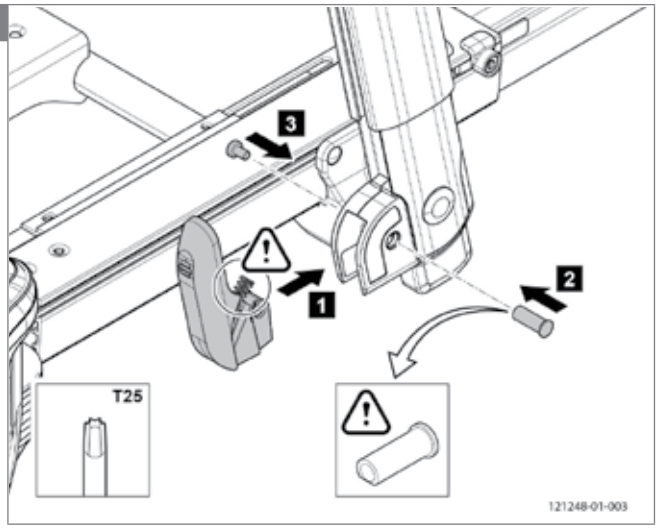

5.3.15 Mounting the standard or swing-away remote holder

Preparation
Note! Switch off the wheelchair via remote control (power wheelchair only).

Instructions
Note! Suitable work area required!
- Follow the illustrated instructions for mounting the standard or the swing-away remote bracket.
- **Note!** Check the cable laying after you have mounted the swing-away remote holder, connected the remote control and adjusted the height, width and depth of the armrest. The remote control cable needs enough clearance to swing away the remote control freely inwards and outwards.

Relevant article numbers
- 1010951 Swing-away remote holder
- 1010952 Standard remote holder
- 1011164 Swing-away remote holder complete
- 1011165 Standard remote holder complete

Tools used

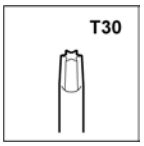

1

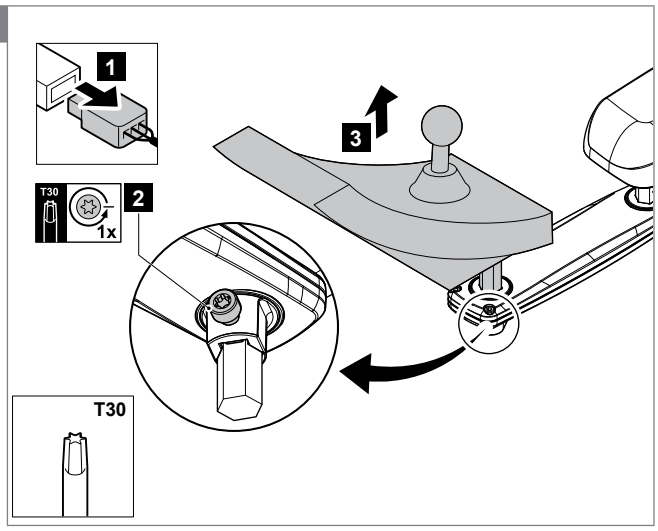

2

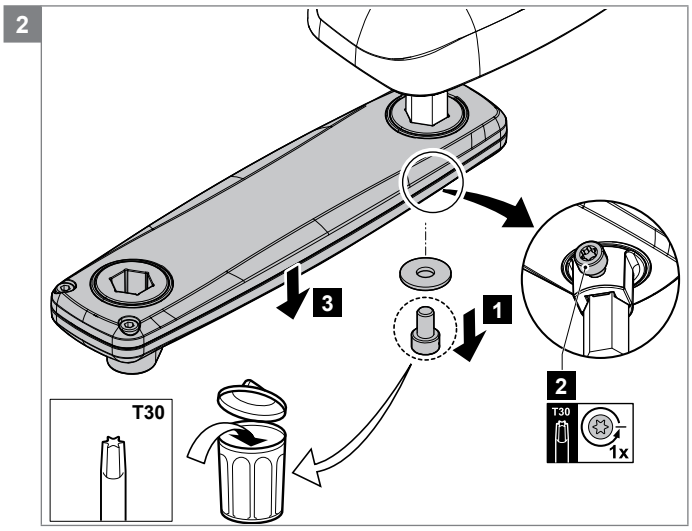

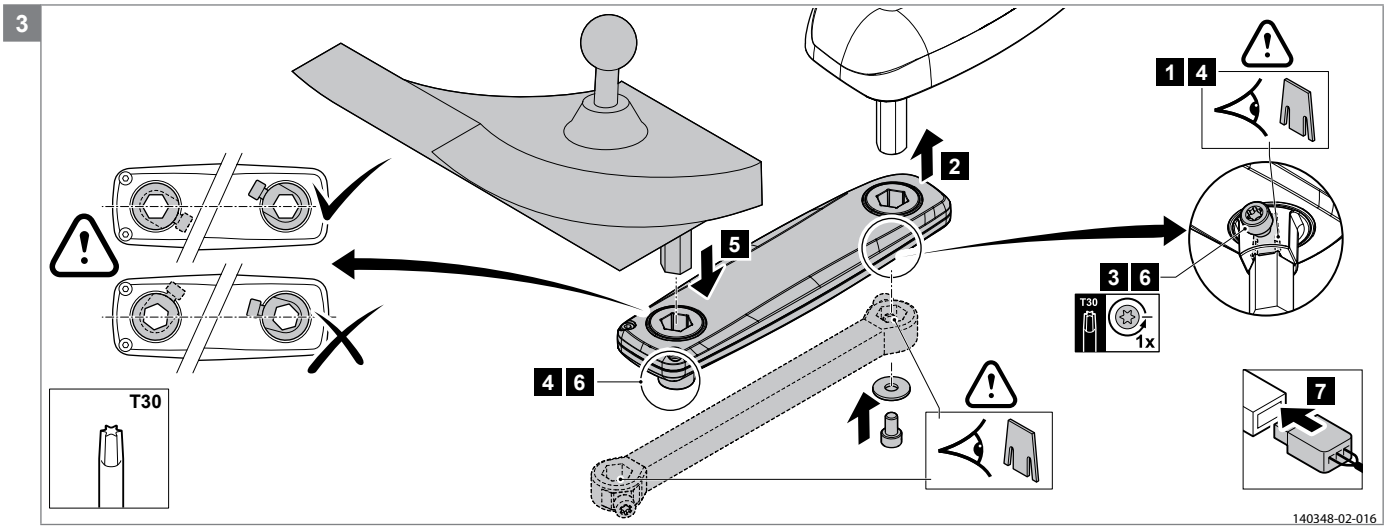

Note! Notice the position of the hexagon at any bracket. The hexagon should point with an edge forward!

5.3.16 Mounting the lighting on flip-up armrest

Preparation
Note! Switch off the wheelchair via remote control (power wheelchair only).

Instructions
Note! Suitable work area required!
- Follow the illustrated instructions for mounting the lights.
- Rebuild afterwards the wheelchair in reversed order.

Relevant article numbers
- 1010963 Lighting set Shark
- 1014904 Lighting set DX2
- 1014905 Lighting set R-net
- 1014906 Lighting set VR2
- 1010959 Front light module for mounting on flip up armrest, left = right
- 1010961 Rear light module for mounting on flip up armrest, left = right
- 9006302 Lighting harness Shark, no tilt and/or lift
- 9006298 Lighting harness Shark with tilt and/or lift
- 9006312 Lighting harness DX2, no tilt and/or lift
- 9006313 Lighting harness DX2 with tilt and/or lift
- 9006331 Lighting harness R-net lighting
- 9006332 Lighting harness R-net lighting and horn
- 9006333 Lighting harness VR2

Socket head screw M8x50 DIN912 in combination with electronic box Socket head screw M8x60 DIN912 required

Tools used

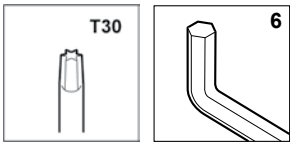

1
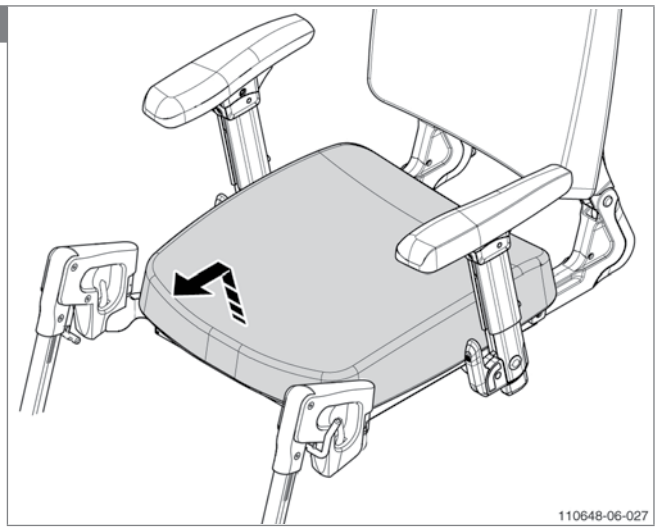

2
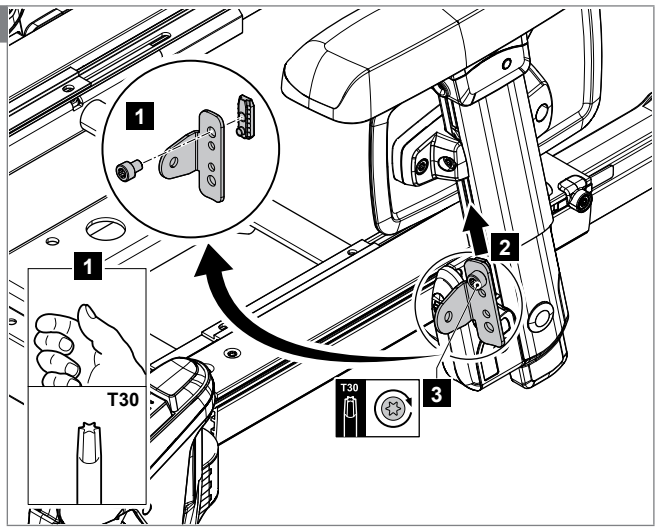

3
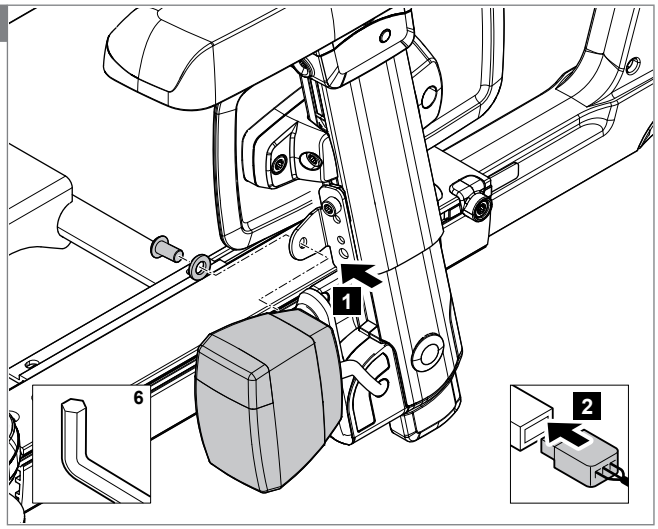

4
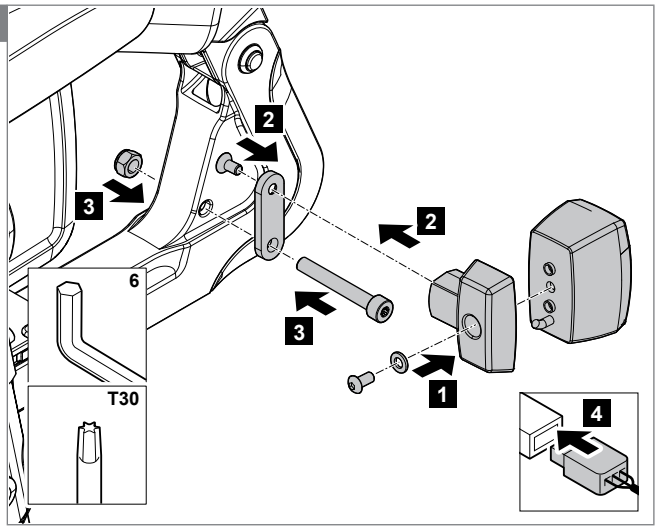

Note! In combination with electronic box Socket head screw M8x60 DIN912 required

5.3.17 Mounting the abduction support

Preparation
Note! Switch off the wheelchair via remote control (power wheelchair only).

Instructions
Note! Suitable work area required!
- Follow the illustrated instructions for mounting the abduction support.
- Rebuild afterwards the wheelchair in reversed order.

Relevant article numbers
- 1011002 Abduction support

Tools used

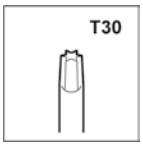

1

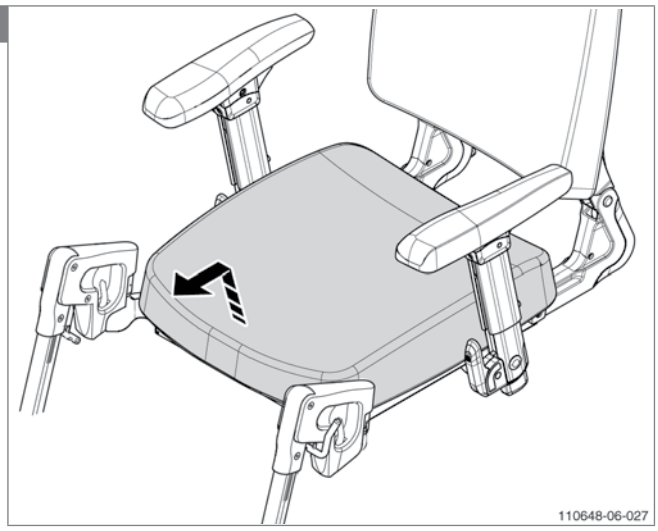

2

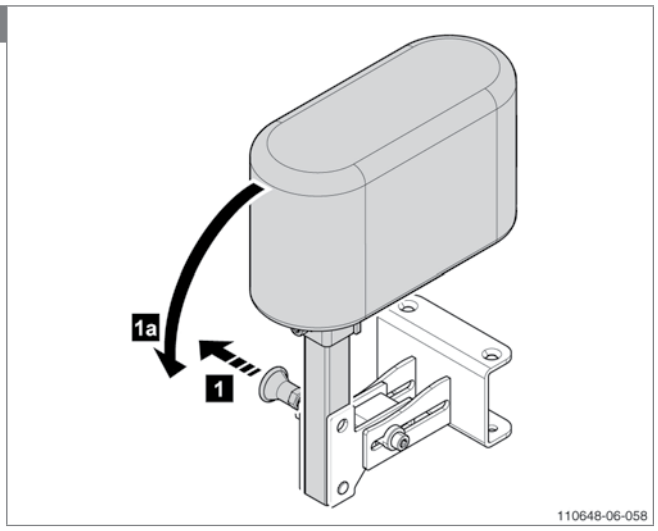

3

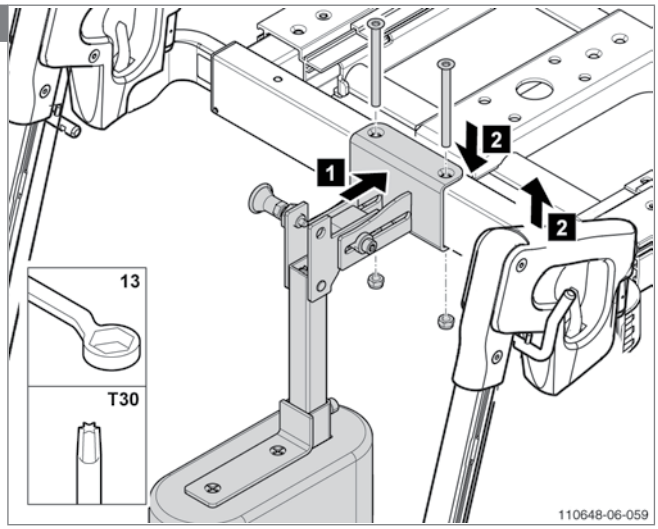

4

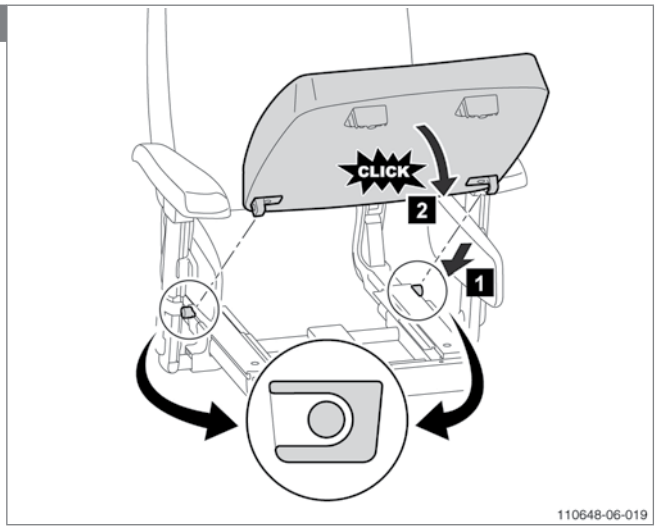

5

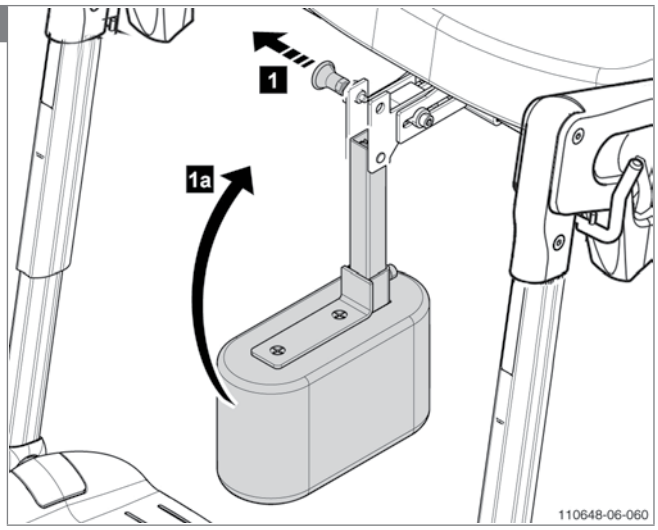

Note! Adjust the abduction support to the desired position, see the Sedeo Pro user manual.

5.3.18 Mounting the hemiplegia armrest

Preparation
Note! Switch off the wheelchair via remote control (power wheelchair only).

Instructions
Note! Suitable work area required!
- Follow the illustrated instructions for mounting the hemiplegia armrest.

Relevant article numbers
- 1010977 Hemiplegia armrest

Tools used

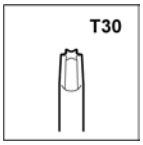

1

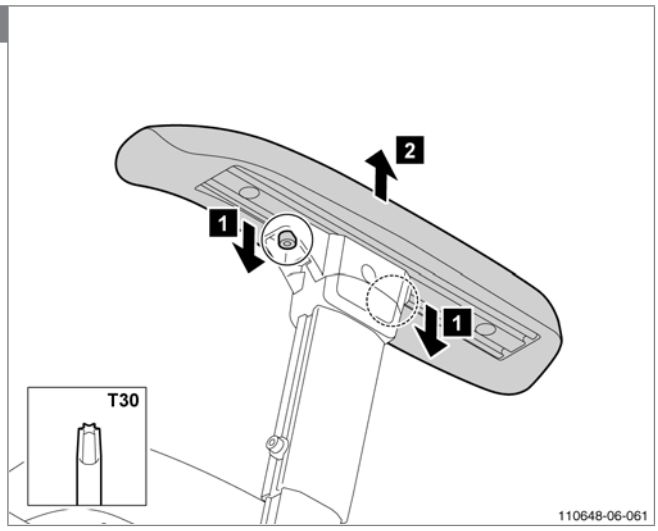

2

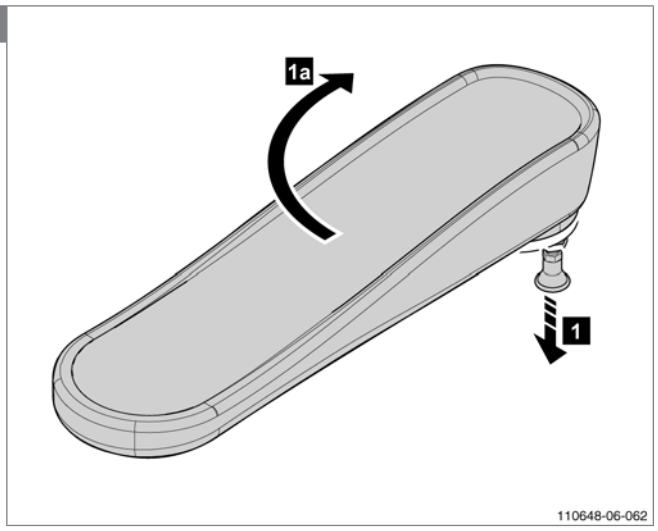

3

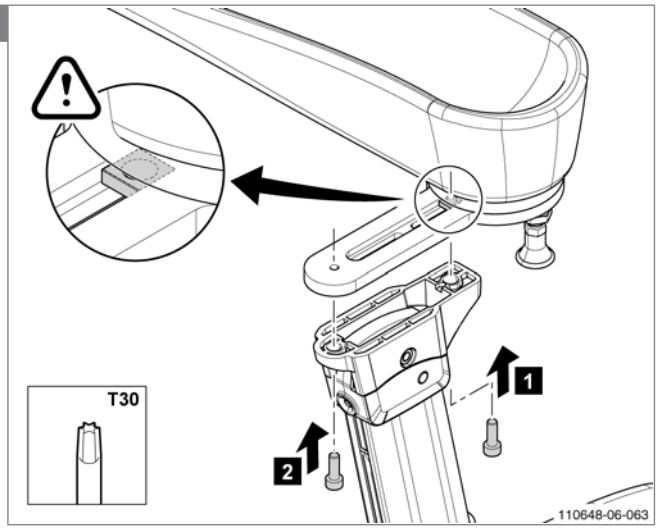

4

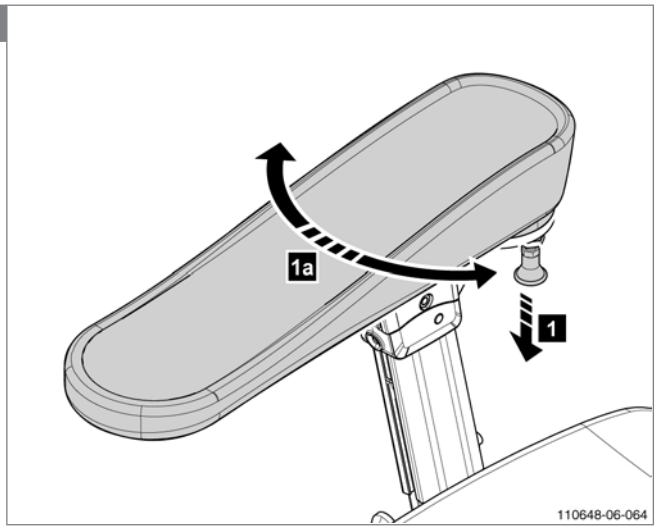

5.3.19 Mounting the mirror

Preparation
Note! Switch off the wheelchair via remote control (power wheelchair only).

Instructions
Note! Suitable work area required!
- Follow the illustrated instructions for mounting the mirrors at both sides (joystick side, 1-4/ not joystick side, 5-8)

Relevant article numbers
- 1012269 Mirror joystick side right
- 1012320 Mirror joystick side left
- 1012319 Mirror not joystick side right
- 1012321 Mirror not joystick side left

Tools used

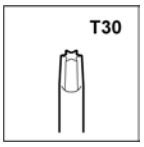

1

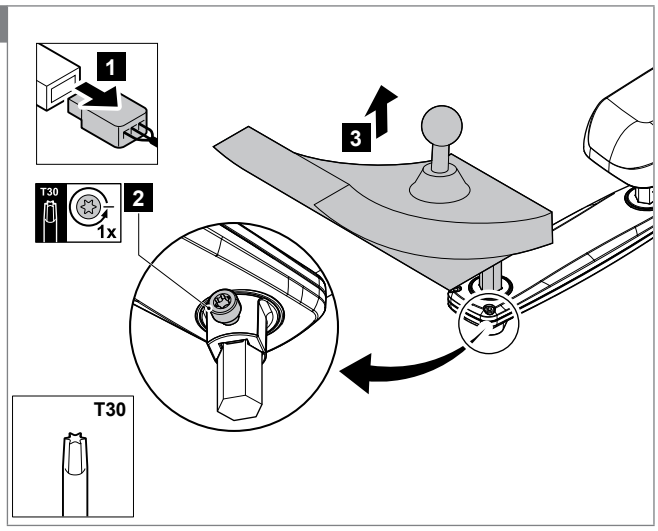

2

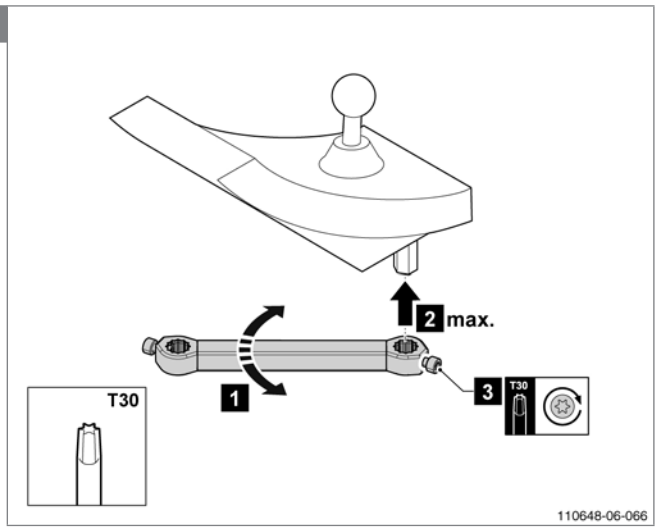

Note! Adjust mirror bracket when charger plug not in reach

3

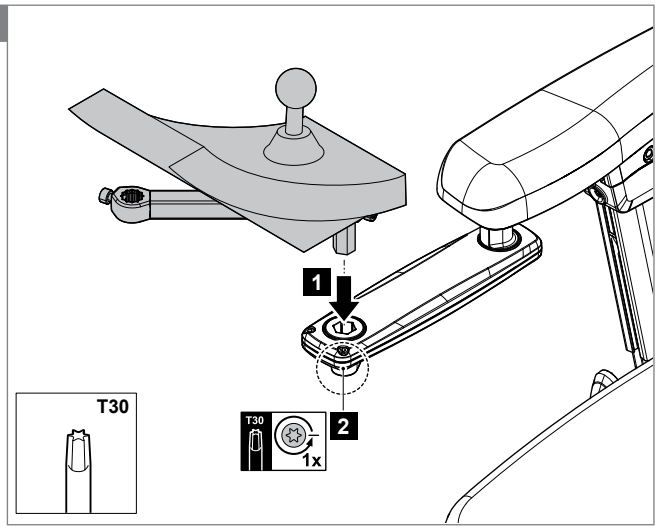

4

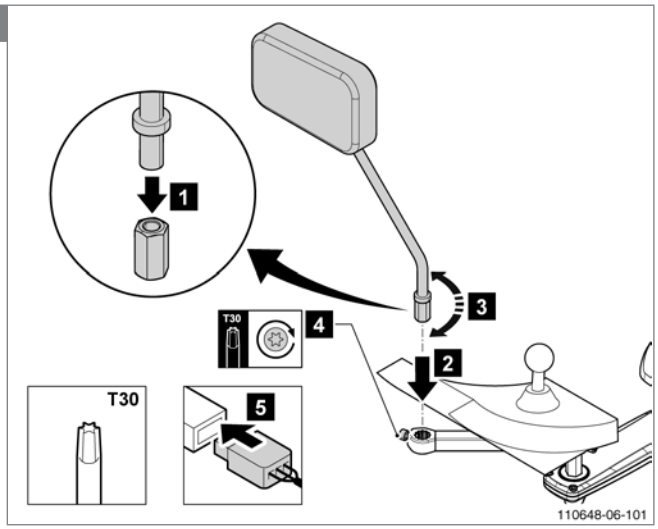

5

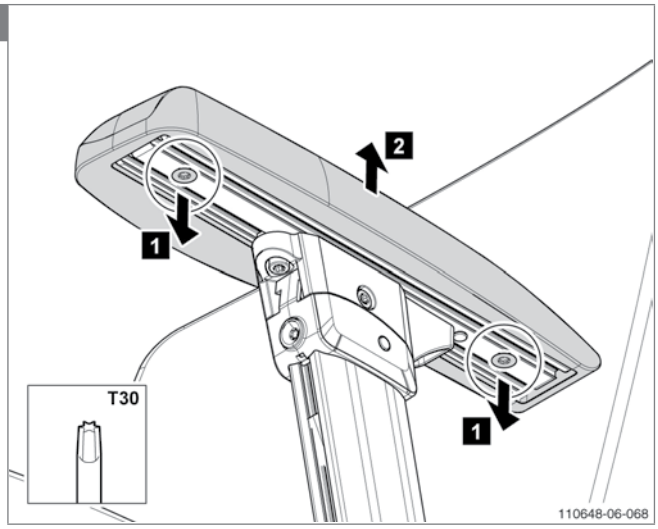
1
2
1
T30
110648-06-068

6

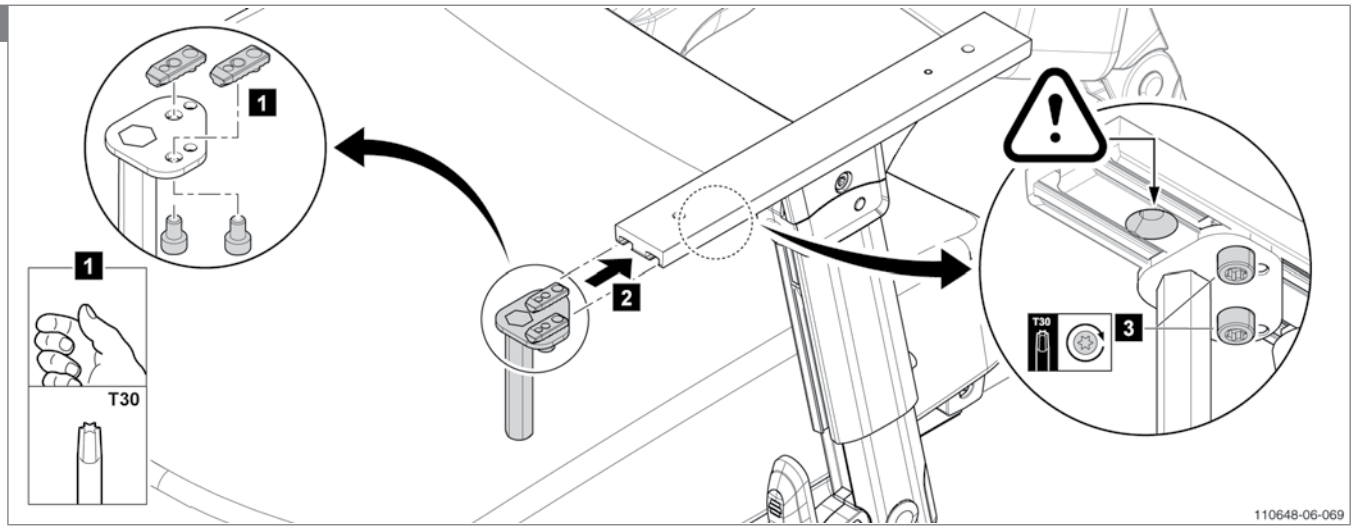
1
1
T30
2
T30
3
110648-06-069

7

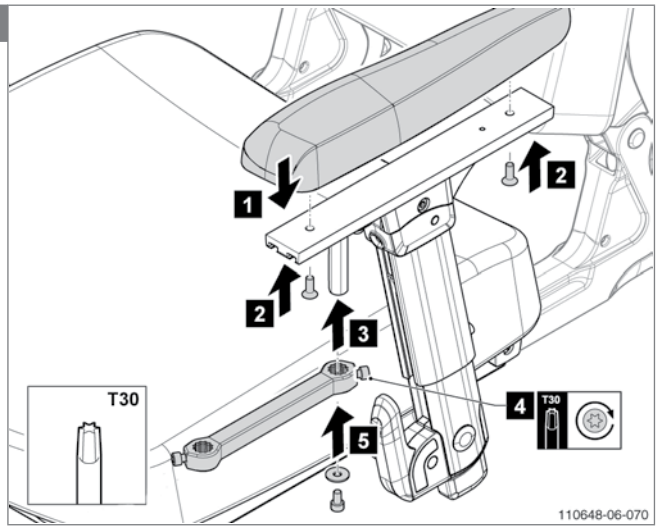
1
2
2
3
T30
4
T30
5
110648-06-070

8

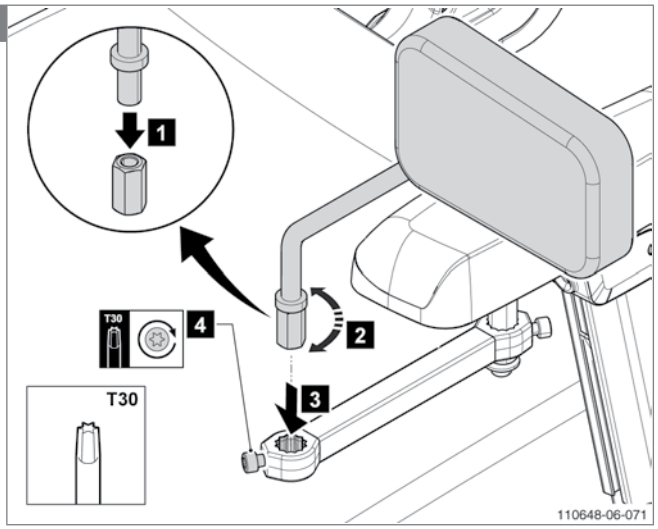
1
T30
4
2
T30
3
110648-06-071

5.3.20 Mounting the positioning belt

Preparation
Note! Switch off the wheelchair via remote control (power wheelchair only).

Instructions
Note! Suitable work area required!
- Follow the illustrated instructions for mounting the positioning belt short or long.
- Mounting on the seat frame, see ill. 1.
- Mounting on the slider, see ill. 2.

Relevant article numbers
- 1010991 Positioning belt short
- 1010992 Positioning belt long

Socket head screw M8x50 DIN912 in combination with electronic box Socket head screw M8x60 DIN912 required

Tools used

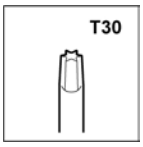

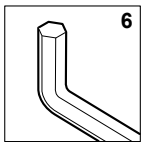

1

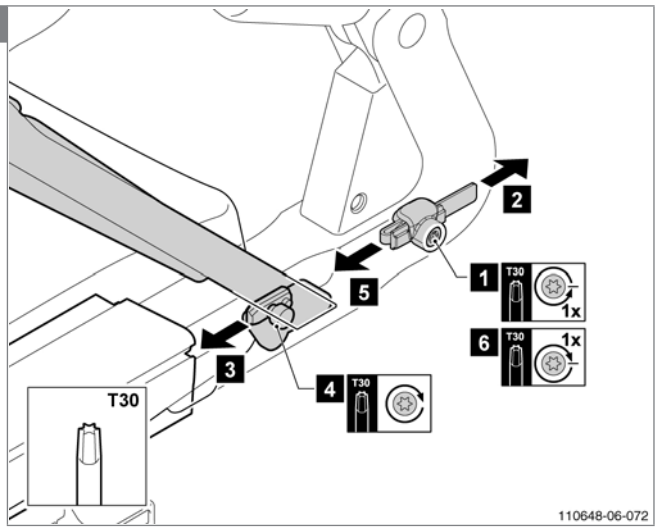

2

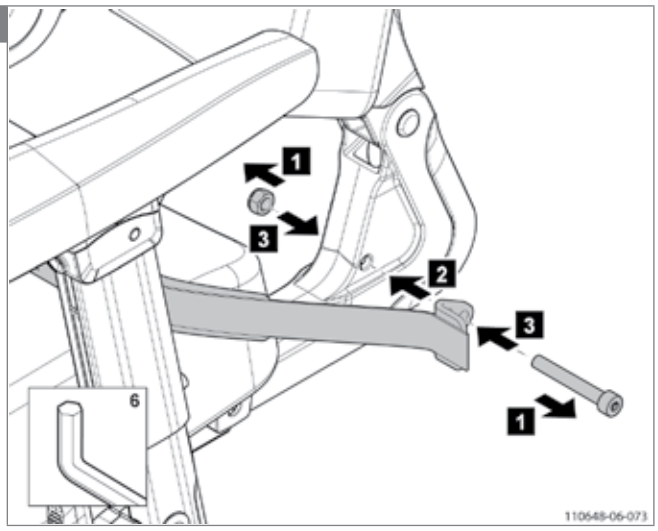

Note! In combination with electronic box Socket head screw M8x60 DIN912 required

5.3.21 Mounting the cane holder

Preparation
Note! Switch off the wheelchair via remote control (power wheelchair only).

Instructions
Note! Suitable work area required!
- Follow the illustrated instructions for mounting the cane holder.
- Rebuild afterwards the wheelchair in reversed order.

Relevant article numbers
- 1012268 Cane holder

Socket head screw M8x50 DIN912 in combination with electronic box Socket head screw M8x60 DIN912 required

Tools used

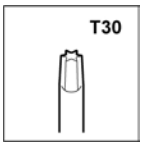

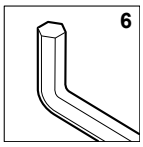

1

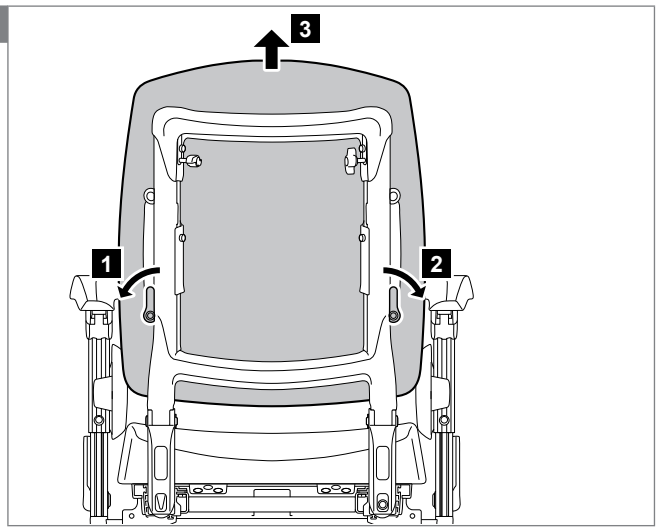

2

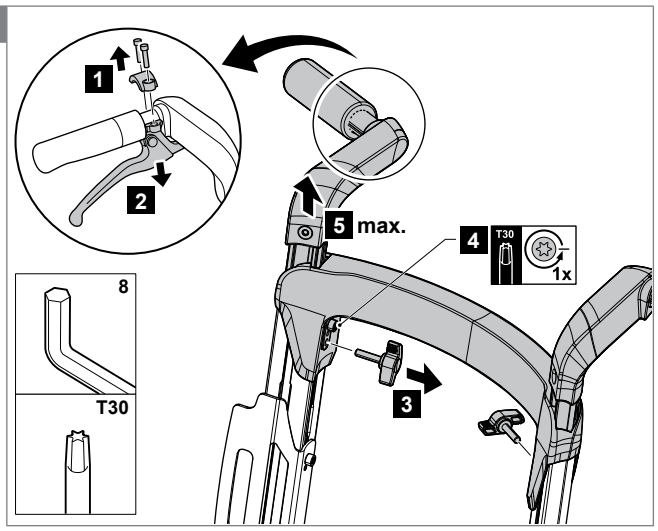

3

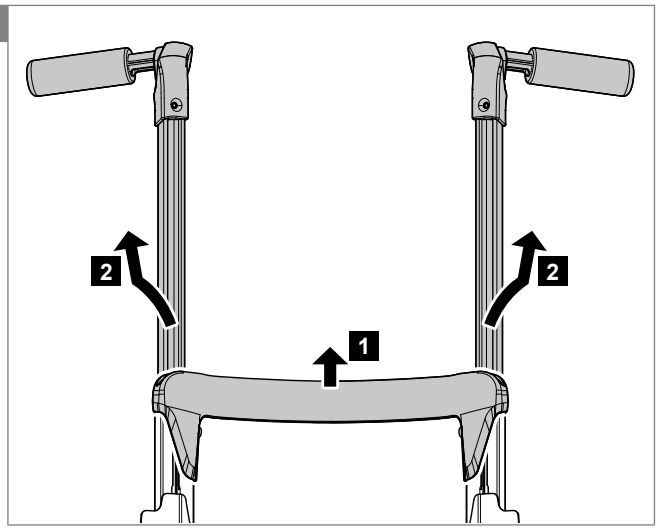

4

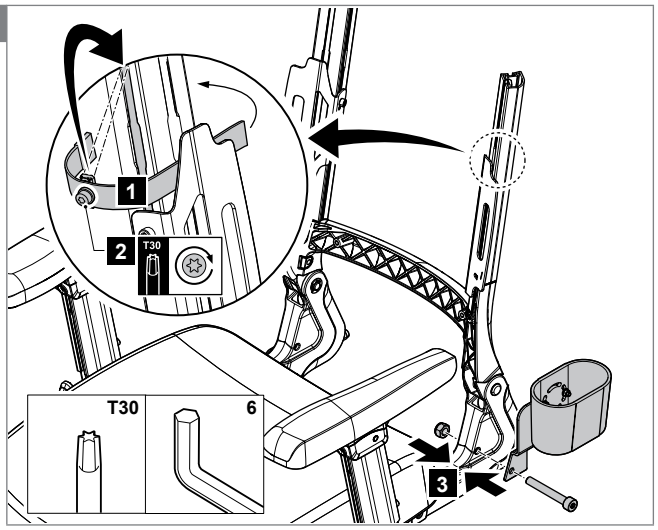

Note! In combination with electronic box Socket head screw M8x60 DIN912 required

5

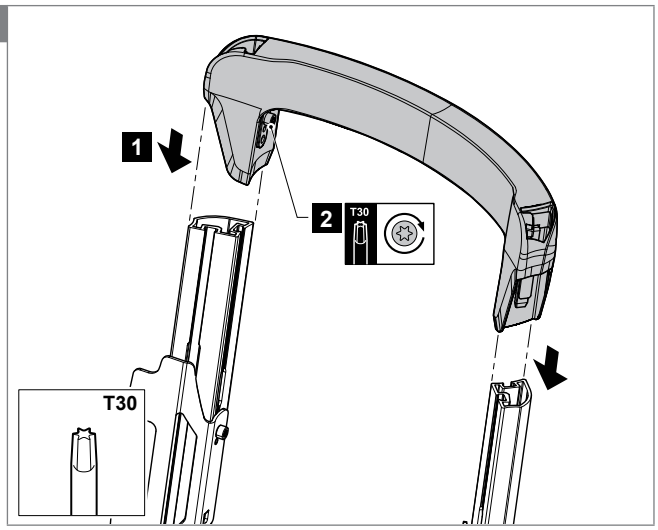

6

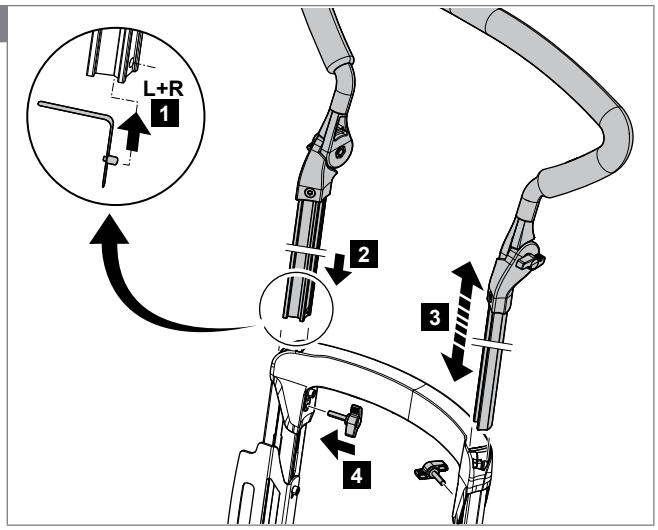

Note! Be sure you mount the two push handle locking clips.

6 Trouble shooting

If the Sedeo seating system is not working or not working as it should, contact your supplier.

7 Specifications

7.1 CE declaration of conformity

The product is in conformity with the provisions of the Medical Devices Directive and carries the CE mark.

The product also meets the following requirements and standards. This has been verified by independent test organizations.

1. EN 12183 (2009) Manual seating systems or EN 12184 (2009) Electrically powered seating systems.
2. ISO 7176-8 Requirements for impact, static and fatigue strength.
3. ISO 7176-9 Climatic tests for electric seating systems and scooters.
4. ISO 7176-16 Requirements for resistance to ignition of upholstered parts.
5. ISO 7176-19 Crash test.
6. EN-ISO 10993-5 (1999-11) Biological evaluation of medical devices.
7. EN 1021 1,2 Assessment of the ignitability of upholstered furniture. Ignition source: smouldering cigarete/match flame equivalent.

7.2 Technical information Sedeo Lite

Description	Unit	Values
Seating system		
User Weight	kg	136
Seat width	mm	400 - 510
Seat depth	mm	420 / 440 / 460 / 480 / 500
Point of gravity	mm	0 / 20 / 40 / 60
Seat		
Seat cushion depth position	mm	-20 / 0 / +20
Backrest		
Backrest height	mm	480
Backrest angle	°	92 / 97 / 102 / 107
Armrest		
Armrest pad width	mm	-20 / 0 per side
Armrest pad height	mm	170 - 290
Armrest pad depth	mm	80
Standard legrest (set)		
Lower leg length (with compressed seat cushion)	mm	360 - 460
Knee angle*	°	70
Elevating legrest (set)		
Lower leg length (with compressed seat cushion)	mm	360 - 530
Knee angle*	°	10 - 75
Ankle angle	°	0 - 180
Calf support width	mm	50
Calf support height	mm	250
Calf support depth	mm	50
Calf support angle (flexible)	°	0 - 25
Headrest		
Headrest height (memory)	mm	170
Headrest depth	mm	180
Headrest vertical angle	°	-45 - 45
Controller bracket		
Controller bracket height	mm	60
Controller bracket depth	mm	35
Controller bracket swing away		
Controller bracket height	mm	50
Controller bracket depth	mm	35
Controller position angle	°	0 - 45

* = 0 ° legs straight ahead and 90 ° = legs in a right angle down

7.3 Technical information Sedeo Pro

Description	Unit	Values
Seating system		
User Weight	kg	160
Seat width	mm	400 - 540
Seat width (option)	mm	520 - 680
Seat depth	mm	440 - 600
Point of gravity	mm	95
Seat		
Seat cushion depth position	mm	-20 / 0 / +20
Backrest		
Backrest height	mm	500 - 640
Backrest angle	°	89 - 128
Backrest recline (option)	°	89 - 128
Armrest		
Armrest pad width	mm	-20 / 0 per side
Armrest pad height	mm	-170 - 290
Armrest pad height (option)	mm	270 - 390
Armrest depth	mm	80
Armrest pad angle	°	0 - 15
Armrest pad depth, controller bracket side	mm	50
Armrest pad depth, non controller bracket side	mm	160
Side support		
Side cushion height	mm	65
Central legrest		
Lower leg length (with compressed seat cushion)	mm	350 - 515
Knee angle*	°	30 - 110
Ankle angle	°	+20 till -40
Central calf support height (option)	mm	120
Manually elevating central legrest		
Lower leg length (with compressed seat cushion)	mm	385 - 550
Knee angle*	°	30 - 110
Ankle angle	°	+20 tot -40
Central calf support height	mm	120
Width of the side support on central calf support	mm	0 - 100
Electrically elevating central legrest		
Lower leg length (with compressed seat cushion)	mm	365 - 530 (14.4 - 20.9)
Knee angle*	°	10 - 86
Maximum length compensation	mm	180 (7.1)
Ankle angle	°	+20 till -20
Calf support height	mm	90 (3.5)
Width calf supports	mm	350 - 430 (13.8 - 16.9)
Standard legrest (set)		
Lower leg length (with compressed seat cushion)	mm	360 - 530
Knee angle*	°	70
Ankle angle	°	0 - 180
Manually and electrically elevating legrest (set)		
Lower leg length (with compressed seat cushion)	mm	360 - 540
Knee angle*	°	10 - 80
Ankle angle	°	0 - 180
Calf support height	mm	120
Headrest		
Headrest height (memory)	mm	170
Headrest depth	mm	180
Headrest vertical angle	°	-45 - 45
Headrest width, standard headrest (option)	mm	-20 - 20

Description	Unit	Values
Headrest width, width adjustable headrest (option)	mm	-110 - 110
Controller bracket		
Controller bracket height	mm	60
Controller bracket depth	mm	35
Controller bracket swing away		
Controller bracket height	mm	50
Controller bracket depth	mm	35
Controller position angle	°	0 - 45
Pushbar		
Pushbar height	mm	185
Hemiplegia		
Hemiplegia armrest angle (option)	°	0 - 45
Abduction support		
Abduction support height	mm	60 - 120
Abduction support depth	mm	60 - 110
Thoracic support		
Thoracic support width	mm	-60 - 0
Thoracic support height	mm	200 - 400
Thoracic support depth	mm	20 - 70

* = 0 ° legs straight ahead and 90 ° = legs in a right angle down

8 Warranty

8.1 Definitions of terms

Definitions of terms used in this warranty:
- After sales service part: Part purchased after the intial product that is durable and may be subjected to natural wear and tear or natural contamination during normal operation within the lifetime of the product.;
- Consumable part: Part that is subjected to natural wear and tear or natural contamination during normal operation within the lifetime of the product (section 9 of Sunrise Medical HCM B.V.'s general terms and conditions of sale);
- Client: Those who purchase the product directly from Sunrise Medical;
- Corrective action: Repair, replace or refund of the product;
- Dealer: Those who re-sell the product to the User;
- Defect: Any circumstance due to which the product is not sound or fit to use, caused by a lack of quality of the material used to manufacture the product as well as the quality of the manufacturing process;
- Option: An accessory delivered with the initial product by Sunrise Medical to extend the standard product model;
- Product: Product that is delivered according to brochure or contract (e.g. wheelchair, scooter, battery-charger etc.);
- Part: Part of product that can be exchanged or replaced. This can be an option, accessory, service part or consumable part;
- Returns: Product or part that needs to be returned;
- RMA-process user: Process to return goods, contact your dealer;
- RMA-process client: Process to return goods, contact Sunrise Medical's Customer Service;
- User: Those who use the product;
- Warranty: The rights and obligations set forth in this document;
- Warranty period: The period of time during which the warranty is valid;
- Warranty provider: Sunrise Medical HCM B.V., Vossenbeemd 104, 5705 CL Helmond, The Netherlands (also referred to as Sunrise Medical).

Notwithstanding the rights and obligations of Sunrise Medical, Client and User set forth in Sunrise Medical's general terms and conditions of sale, the rights of the Client and/or User towards Sunrise Medical in case of defects are limited to the provisions set forth in this warranty. For the duration of the warranty period Sunrise Medical guarantees that the product is without defects.
In case of any defects the User is required –within two weeks after discovery of the defect- to contact the dealer. He has to complete a return form and return the product or part via the RMA-process. Sunrise Medical will, at its sole discretion, take the corrective action it seems fit under the given circumstances within a reasonable period of time (depends on nature of claim) from receipt of the completed return form. The warranty period will not be extended after a corrective action.

8.2 Warranty period table

Seating

Description	Warranty period	Examples include, but are not limited to the parts mentioned below
Frame	2 years	Weldment/frame
Electronics	1 year	Electronic components
After sales service parts	New: 1 year after invoice Repaired: 90 days after invoice	Metal parts
Consumable parts	40 days after invoice	Upholstery etc.
Options/Accessories	2 years	Lap strap, bag brackets etc. Delivered with the initial product

Sunrise Medical will only accept shipment costs and corrective costs related to warranty on equipment during the warranty period.

This warranty will void in case of:
- The product and/or its parts being modified;
- Changes in cosmetic appearance by use;
- Failure to observe the instructions for use and maintenance, use other than normal use, wear and tear, negligence, collateral damage by neglect of earlier symptoms, overloading, third-party accidents, non-original parts used and defects not caused by the product;
- Circumstances beyond our control (flood, fire, etc.).

This warranty does not cover:
- Tyres and inner tubes
- Batteries (covered by the battery manufacturer's warranty).

Clients and/or Users have legal (statutory) rights under applicable national laws relating to the sale of consumer products. This warranty does not affect statutory rights you may have nor those rights that cannot be excluded or limited, nor rights against the entity from whom the product was purchased. Clients may assert any rights they have at their sole discretion.

Version list

Version	Page	Draw	Changes
2016 V1	-	-	Replaced Handicare by Sunrise Medical HCM
	20	9	Added article number 0001494
	24-25	12	• Changed article number 9007575 into 9010232 • Added article number 1018110
	42	16	• Changed article number 1012273 into 1017704 • Updated drawing
	53	21	Added pos number to article number 9001233
	58	26	Deleted article number 1016779
	59	27	• Changed article number 1010914 into 9004725 • Updated drawing
	60	28	Changed article number 1010914 into 9004725
	62	30	Added article number 0001494
	70	38	Added article number 1017907
Rev.1.0	-	-	Updated cover layout
	6	-	Updated image identification plate
	8	-	Updated image moving parts
	10	-	Updated remark
	18	6	Changed section name
	24	-	Updated image and Sedeo Pro content overview
	25-26	12	• Added article number 9003102 • Added article numbers 1016741 and 1016742
	43	16	Updated drawing angle adjustable backrest mounting set
	49	19	• Moved section 19 to section 39 • Added new section 19 'Standard legrest (for Sedeo Original standard legrest see section 39)'
	50	20	• Moved section 20 to section 40 • Added new section 20 'Manually elevating legrest (for Sedeo Original manually elevating legrest see section 40)'
	51	21	• Moved section 21 to section 41 • Added new section 21 'Electrically elevating legrest (for Sedeo Original electrically elevating legrest see section 41)'
	53	23	Added article number 9008039 Adapter set Comfort heavy duty legrest
	59	29	Added article number 1018345 Headrest bracket memory block
	75-115	-	Updated legrests in all applicable drawings.
Rev.2.0	26	12	• Added article number 1016736 Backrest slider right with gasspring, operated by user, right • Added article number 1016737 Backrest slider right with gasspring, operated by user, left
	49	19	Added article number 6000130 Calf strap extended SW 54, incl. mounting set
	64	34	Changed descriptions article numbers 1017014, 1017015, 1010993
2020 V1	28	-	Removed all Seat Cusion Covers and Top Covers from table and updated article numbers
	31	-	Removed all Backrest Cusion Covers and Top Covers from table and updated article numbers
	33	-	Removed all Backrest Flexible Covers and Top Covers from table and updated article numbers
	49	-	• Added article number 1015404 Lighting bracket front • Added article number 1015442 Lighting bracket rear right • Added article number 1015443 Lighting bracket rear left
	60, 62	-	Added article number 220.00331.505 Sedeo kneecushion for elevating legrest, black Sellaskin
	47	9	Updated Headrest Cover Small from article number 3009220 to article number 20009103
2022-07	-	-	Removed end of life Sedeo Original, several LCP updates

AU
Sunrise Medical Pty. Ltd.
6 Healey Circuit, Huntingwood
NSW 2148
Australia
T: +61 (2) 9678 6600
E: enquiries@sunrisemedical.com.au
www.SunriseMedical.com.au

BE
Sunrise Medical HCM B.V.
Vossenbeemd 104
5705 CL Helmond
The Netherlands
T: +32 (0)78 150 159
E: customerservice@sunrisemedical.be
www.SunriseMedical.be

CA
Distributed in Canada by:
Sunrise Medical Canada Inc.
237 Romina Drive, Unit 3
Concord, ON
L4K 4V3, Canada
T: +1 800 263 3390
E: mktcanada@sunmed.com
www.SunriseMedical.ca

CH
Sunrise Medical AG
Lückhalde 14
3074 Muri/Bern
Schweiz/Suisse/Svizzera
T: +41 (0)31 958 3838
E: info@sunrisemedical.ch
www.SunriseMedical.ch

DE / AT
Sunrise Medical GmbH & Co. KG
Kahlbachring 2-4
69254 Malsch/Heidelberg
Deutschland
T: +49 (0) 7253/980-0
E: kundenservice@sunrisemedical.de
www.SunriseMedical.de

DK
Sunrise Medical ApS
Park Allé 289 G
DK-2605 Brøndby
T: +45 70 22 43 49
Email: info@sunrisemedical.dk
www.SunriseMedical.dk

ES / PT
Sunrise Medical S.L.
Polígono Bakiola, 41
48498 Arrankudiaga – Vizcaya
España
T: +34 (0) 902142434
E: marketing@sunrisemedical.es
www.SunriseMedical.es

FR
Sunrise Medical S.A.S
ZAC de la Vrillonnerie
17 Rue Mickaël Faraday
37170 Chambray-Lès-Tours
T: + 33 (0) 2 47 55 44 00
E: info@sunrisemedical.fr
www.SunriseMedical.fr

IT
Sunrise Medical S.r.l.
Via Riva, 20 – Montale
29122 Piacenza
Italia
T: +39 0523 573111
E: info@sunrisemedical.it
www.SunriseMedical.it

NL
Sunrise Medical HCM B.V.
Vossenbeemd 104
5705 CL Helmond
The Netherlands
T: +31 (0)492 593 888
E: customerservice@sunrisemedical.nl
www.SunriseMedical.nl
www.SunriseMedical.eu (International)

NO
Sunrise Medical AS
Delitoppen 3
1540 Vestby
Norway
T: +47 66963800
E: post@sunrisemedical.no
www.SunriseMedical.no

PL
Sunrise Medical Poland Sp. z o.o.
ul. Elektronowa 6,
94-103 Łódź
Polska
T: + 48 42 275 83 38
E: pl@sunrisemedical.de
www.Sunrise-Medical.pl

SE
Sunrise Medical AB
Box 9232
400 95 Göteborg
Sweden
T: +46 (0)31 748 37 00
E: post@sunrisemedical.se
www.SunriseMedical.se

UK
Sunrise Medical
Thorns Road
Brierley Hill
West Midlands
DY5 2LD
United Kingdom
T: +44 (0) 845 605 66 88
E: enquiries@sunmed.co.uk
www.SunriseMedical.co.uk

Dealer / distributor:

Serial number:

TM_Sedeo_Lite_Pro_EU_INT_Rev.1.0_2020_08_18