LECKEY

Squiggles+

Spare Parts Catalogue

Supporting
Children

Squiggles+ Spare Parts - **Covers**

Pos.	Leckey Sales Code	Description	Min. Order Qty	Colour Options			
	(Replace XX with colour)			Blue	Purple	Red	Red Vinyl
1	184-1800-XX	Full Cover Pack	1	-02	-04	-09	-09VIN
2	184-1812-XX	Headrest	1	-02	-04	-09	-09VIN
2	184-1814-XX	Headrest Cushion and Laterals [Pair]	1	-02	-04	-09	-09VIN
3	184-1820-XX	Knee Support [Pair]	1	-02	-04	-09	-09VIN
4	184-1822-XX	Support Harness	1	-02	-04	-09	-09VIN
5	184-1824-XX	Chest Cushion	1	-02	-04	-09	-09VIN
6	184-1826-XX	Hip Cushion	1	-02	-04	-09	-09VIN
7	184-1828-XX	Chest Lateral Covers	1	-02	-04	-09	-09VIN
8	184-1836-XX	Pelvic Support Harness	1	-02	-04	-09	-09VIN
9	184-1838-XX	Spine Cap Cover	1	-02	-04	-09	-09VIN

Squiggles+ Spare Parts - **Headrest Support & Laterals**

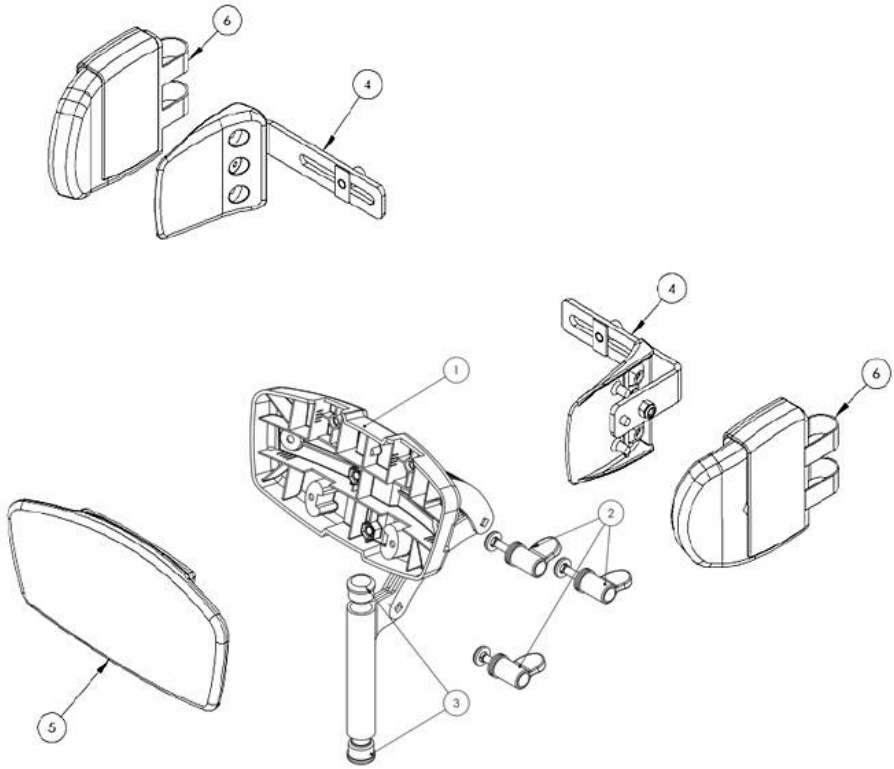

Pos.	Leckey Sales Code	Description	Min. Order Qty	Colour Options			
(Replace XX with colour)				Blue	Purple	Red	Red Vinyl
1	117-697	Headrest Support (Hardware Only)	1	-	-	-	-
2	137-9056	Wing Nut Assembly	1	-	-	-	-
3	SF53	Round Tube Insert (Ø22) [Single]	2	-	-	-	-
4	118-667	Headrest Lateral Brackets [Pair]	1	-	-	-	-
5	184-1812-XX	Headrest Cushion	1	-02	-04	-09	-09VIN
4, 5 & 6	184-1814-XX	Headrest Cushion and Laterals [Pair]	1	-02	-04	-09	-09VIN

Squiggles+ Spare Parts - **Handlebar**

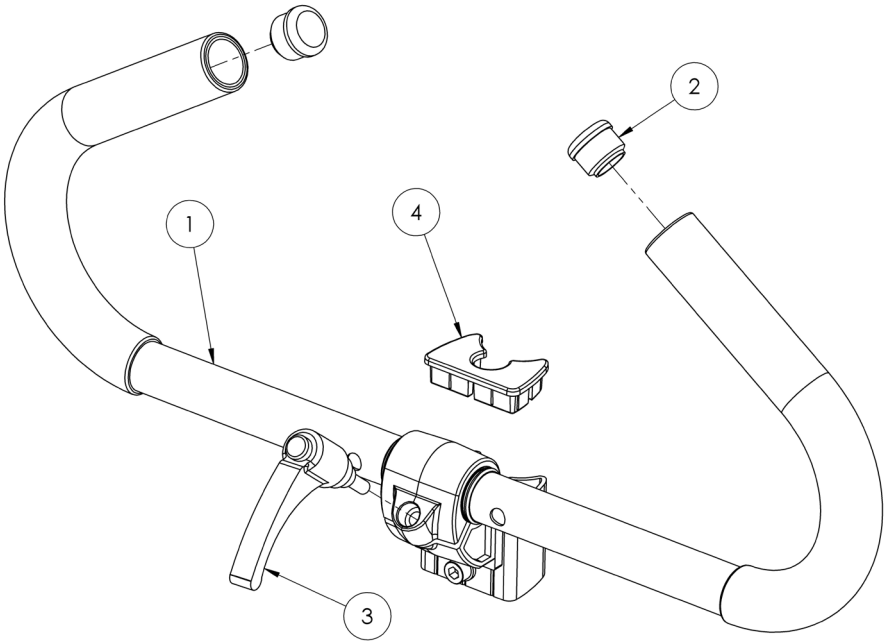

Pos.	Leckey Sales Code	Description	Min. Order Qty
1	184-621	Push Handle Assembly	1
2	SF53	Round Tube Insert [Single]	2
3	SF95	Adjustable Handle	1
4	118-154	Extrusion Outer Cap	1

Squiggles+ Spare Parts - **Outer Spine**

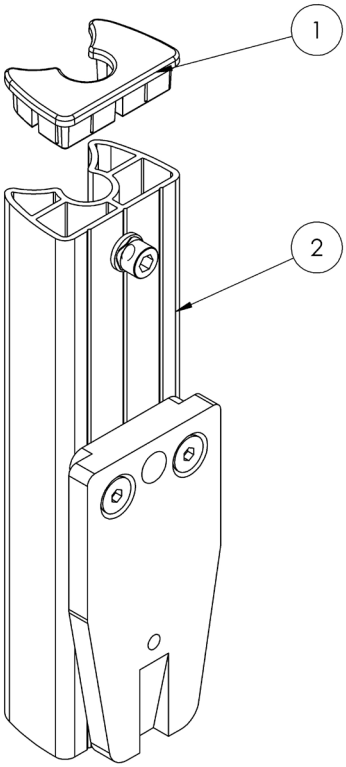

Pos.	Leckey Sales Code	Description	Min. Order Qty
1	118-154	Extrusion Outer Cap	1
2	184-610	Outer Spine Assembly	1

Squiggles+ Spare Parts - **Inner Spine**

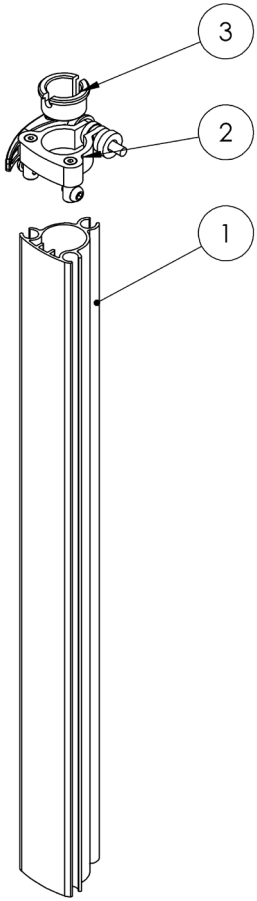

Pos.	Leckey Sales Code	Description	Min. Order Qty
1	184-611	Inner Spine Assembly	1
2	184-712	Head Support Clamp Assembly SQ+	1
3	118-166	Head Support Collar	1

Squiggles+ Spare Parts - **Chest Pad and Orb**

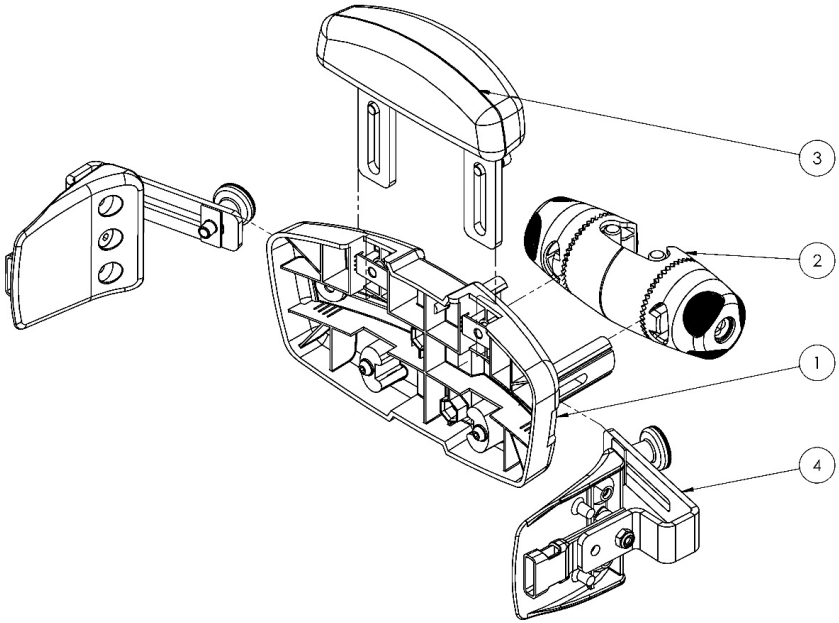

Pos.	Leckey Sales Code	Description	Min. Order Qty
1	118-663	Chest Pad Assembly	1
2	118-680	Orb Assembly	1
3	118-664	Sternum Pad	1
4	118-666	Lateral Assembly [Single]	1

Squiggles+ Spare Parts - **Hip Pad and Orb**

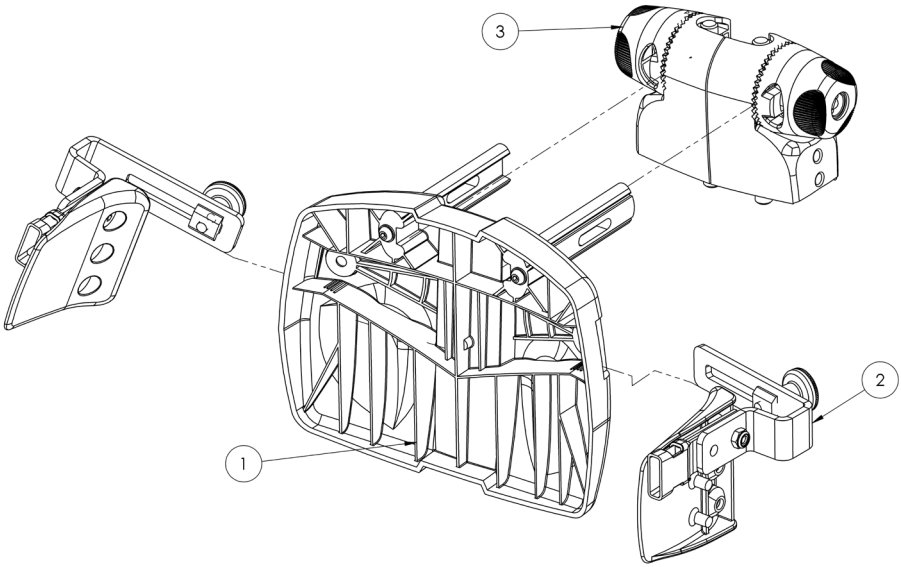

Pos.	Leckey Sales Code	Description	Min. Order Qty
1	184-612	Hip Pad Assembly	1
2	118-666	Lateral Assembly [Single]	1
3	184-660	Orb Assembly	1

Squiggles+ Spare Parts - **Knee Support**

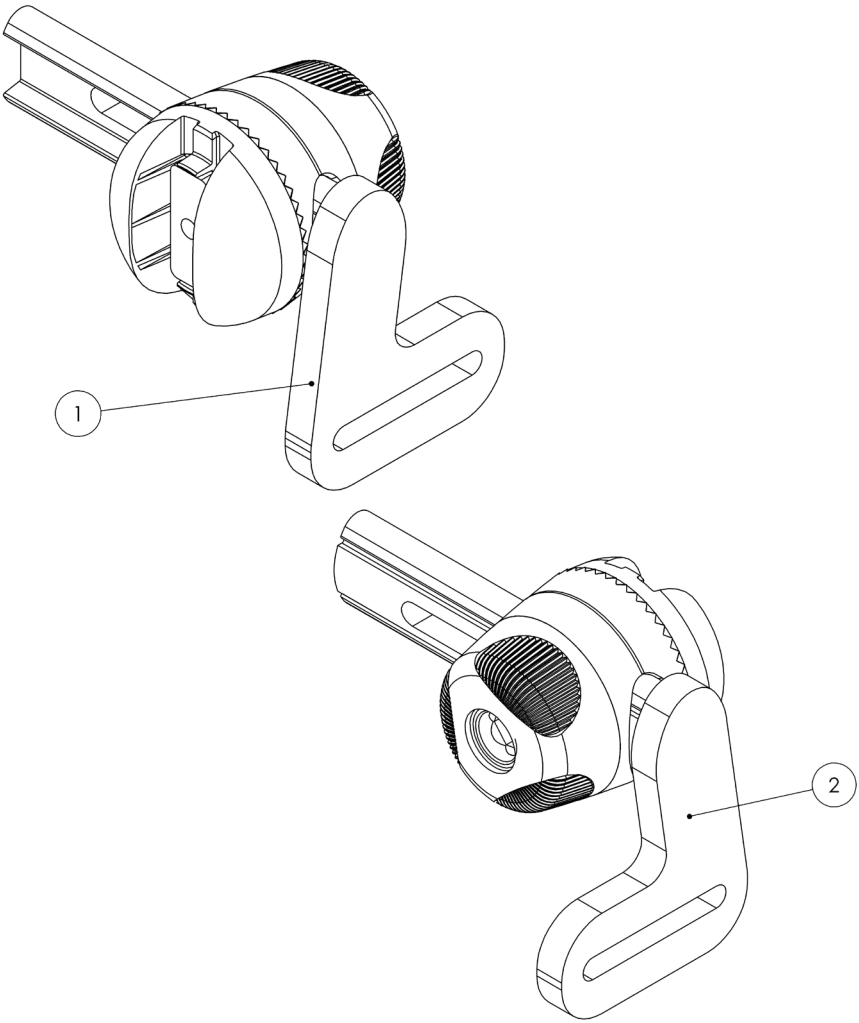

Pos.	Leckey Sales Code	Description	Min. Order Qty
1	184-613-LHS	Knee Block Assembly Left	1
2	184-613-RHS	Knee Block Assembly Right	1

Squiggles+ Spare Parts - **Footrest**

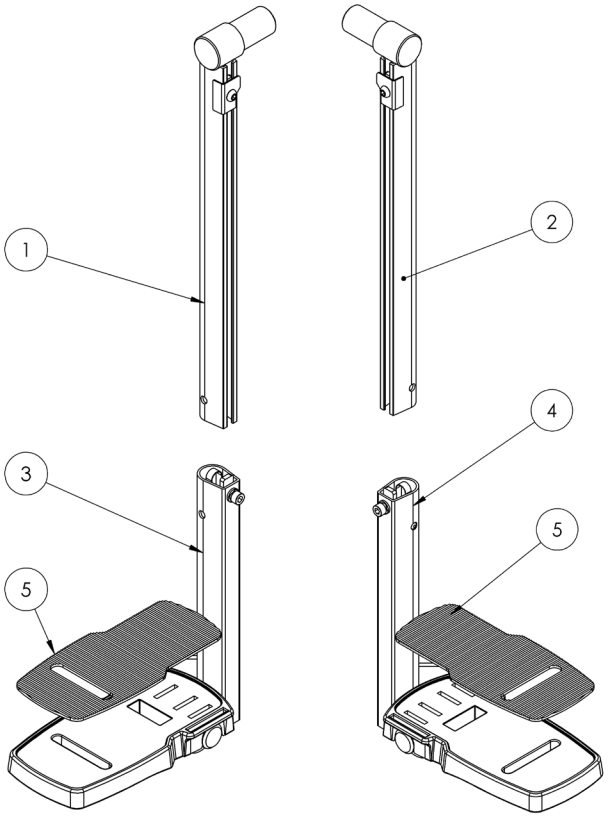

Pos.	Leckey Sales Code	Description	Min. Order Qty
1	184-692	Calf Inner Support Assembly RH	1
2	184-693	Calf Inner Support Assembly LH	1
3	184-654	Calf Outer Support Assembly RH	1
4	184-655	Calf Outer Support Assembly LH	1
5	117-156	Footplate Rubber Matting (One Piece Only)	1

Squiggles+ Spare Parts - **Sandal**

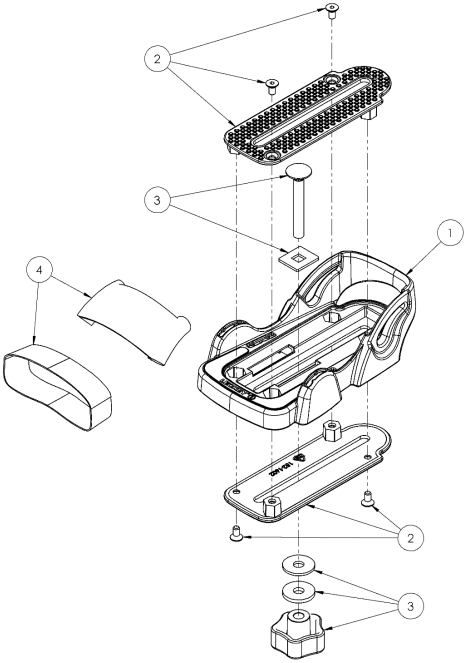

Pos.	Leckey Sales Code	Description	Min. Order Qty
1	152-1700	Sandal Moulding (Size 1)	1
1	152-2700	Sandal Moulding (Size 2)	1
1	152-3700	Sandal Moulding (Size 3)	1
2	152-1701	Sandal Lid & Screws	1
3	152-1702	Sandal Attachment Kit	1
4	152-1703	Sandal Straps (Size 1)	1
4	152-2703	Sandal Straps (Size 2)	1
4	152-3703	Sandal Straps (Size 3)	1

Squiggles+ Spare Parts - **Pivot Chassis**

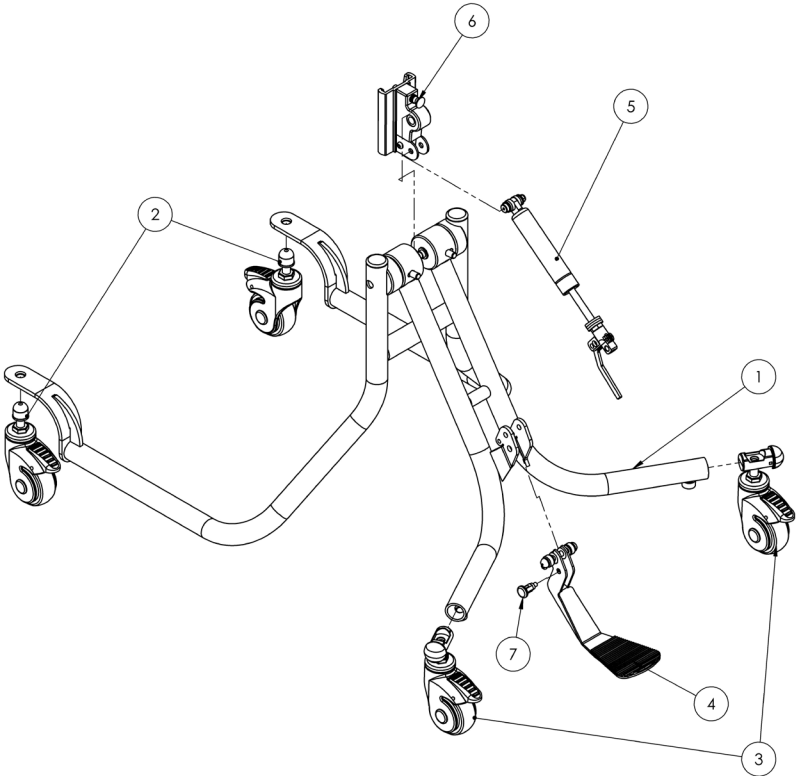

Pos.	Leckey Sales Code	Description	Min. Order Qty
1	188-764	Pivot Chassis	1
2	184-715	Castor Assembly - Front [Pair]	1
3	184-716	Castor Assembly - Rear [Pair]	1
4	184-625	Pedal Assembly	1
5	188-717	Gas Spring Assembly	1
6	118-713	Pivot Interface Assembly	1
7	IA19	Pull Pin [Single]	1

Squiggles+ Spare Parts - **Tray**

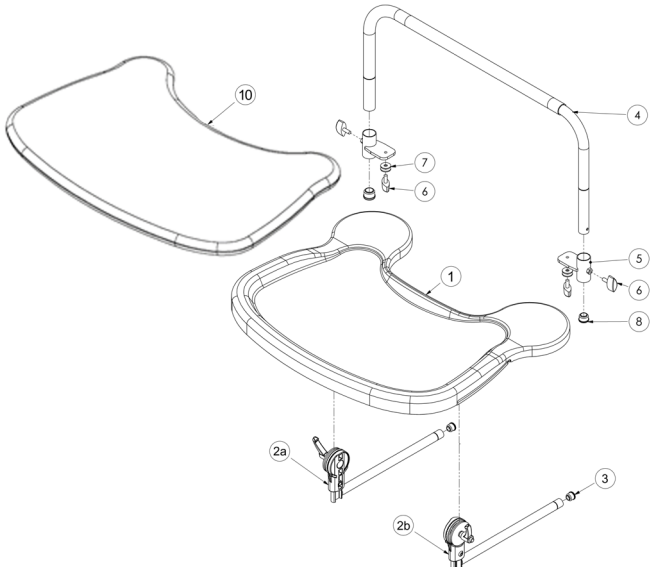

Pos.	Leckey Sales Code	Description	Min. Order Qty
1	118-619	Tray Assembly	1
2a	118-710	Tray Depth Adjustment Assembly LH	1
2b	118-618	Tray Depth Adjustment Assembly RH	1
3	SF51	Round Tube Insert [Single]	2
4	117-769	Tray Grab Rail	1
5	118-646	Tray Grab Rail Height Adjuster [Single]	1
6	SF48	Locking Key M6 [Single]	2
7	SI09	M6 Washer [Single]	4
8	SF52	3/4" Round Tube Insert [Single]	1
9	SF53	7/8" Round Tube Insert [Single]	1
10	120-270	Padded Tray Insert	1

Squiggles+ Spare Parts - **Tray Support**

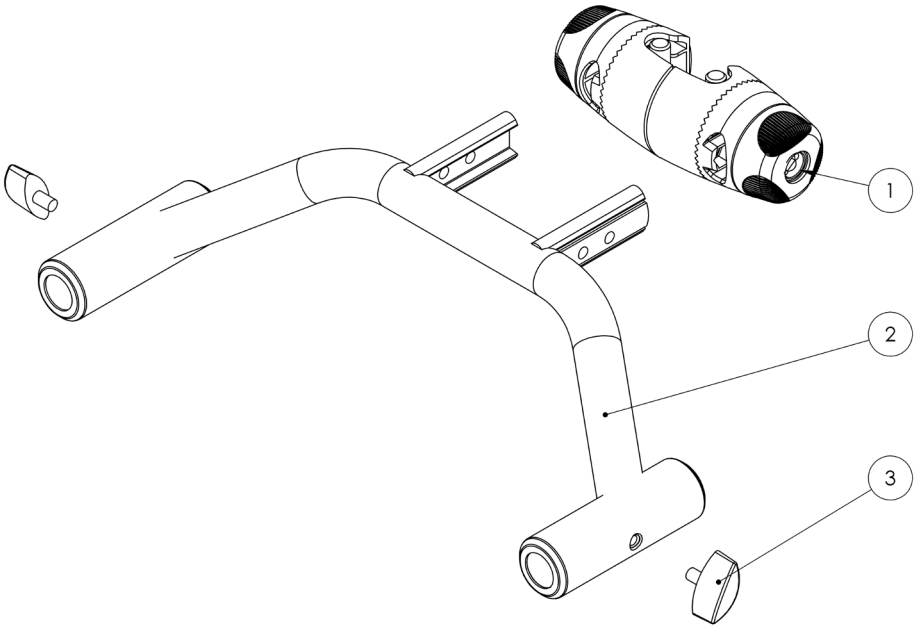

Pos.	Leckey Sales Code	Description	Min. Order Qty
1	118-660	Orb Assembly	1
2	184-689	Tray Horn Assembly	1
3	SF48	Locking Key (M6x16) [Single]	2

Leckey
19c Ballinderry Road
Lisburn BT28 2SA
Northern Ireland

(+44) 28 9260 0750
hello@leckey.com

leckey.com

LS827-02