SUNRISE MEDICAL

Life

Spare Parts Catalogue

QUICKIE®

INNOVATE.
BUILD FOR THE FUTURE

Spare Parts Catalogue

CE This product is manufactured to comply with the Medical Device Directive 93/42/EEC.

Use of Illustrations & Text:

The illustrations and accompanying text set out in this document are the property of Sunrise Medical Limited and must not be copied or used for manufacturing, tendering or any other purpose without written consent from Sunrise Medical.

Ordering:

Item numbers shown as N/A are for reference purposes only and should not be used when ordering replacement parts. Always quote the correct serial number and part number.

Quality Management Systems:

Sunrise Medical Limited is accredited to ISO 9001: 2000, which is the internationally recognised standard for quality management systems, as well as ISO 13485: 2003, which specially governs Medical Devices. These approvals ensure that we provide quality in all areas of our business from development through to final delivery.

Parts Disclaimer:

It is potentially hazardous to fit or use any parts other than genuine Sunrise Medical parts. The company disclaims all liability for the consequences of such use, which in addition voids the product warranty.

This product is for the carriage of one person and must not under any circumstances be used for any other purpose.

Queries:

Should you have any queries then please contact Sunrise Medical Ltd on

Tel: +44 (0)1384 44 66 66
Fax: +44 (0)1384 44 66 44

QUICKIE Life T 5
Rear wheel 5
Design Rear Wheel 5
Universal Rear Wheel (Alu hub) 7
Lightweight Rear wheel 9
Spinergy Wheel 11
Drum brakes Rear wheel with brake 13
Max Grepp Ergo Para hand rim 15
Spoke guards 16
Spoke guards, kids 18
Spoke guards, teens 20
Spoke guards, adults 22
Screw in adapter 24
One-arm drive, connecting shaft 26
One arm drive 27
Handrim 29
Brake 31
Knee lever wheel lock with frame fitting 31
Brake Lever Extension 33
Compact Brake 34
Integrated sideguard brake - Safari brake 35
Integrated sideguard brake - Safari brake -, Attendant 38
One arm brake 41
Activation for Drum brake/ Quick release axle 43
Footrest 44
Footrest Aluminum Version 44
Footrest Plastic Version 80° 47
Footrest Plastic Version 70° 51
Elevating legrest (ELR) Lower Leg Length 30-34 cm 54
Elevating Leg Rest (ELR) > Lower Leg Length 34 cm 56
Stump Pad 58
Plastic Footplate 59
Divided footplate, angle and depth adj., aluminium 61
Divided Footrest, metal 63
Divided footboard, metal, for short LLL 65
Continous Footboard metal 67
Continuous footboard, metal, for short LLL 68
Footrest, continuous, angle and depth adjustable, folding upwards, plastic /carbon/ aluminium 69
Platform footplate, angle and depth adj., aluminium 71
Platform footplate lightweight, composite, flip-up 73
Castor 74
Fork for fixed frame , Aluminium 74
Fork for fixed frame , Carbotecture 78
Fork for swing away frame , Aluminium 81
Fork for swing away frame , Carbotecture 85
Castors 89

Table of contents

Frame ... 91
Front Frame for Swing Away Footrest ... 91
Front Frame for Fixed Footrest ... 93
Connection Profil ... 95
Back Frame ... 97
Backrest ... 99
Crash Test Option ... 99
Half Folding Back ... 100
Back Angle Adjustable ... 102
Back tubes for standard back ... 105
Height Adjustable Push Handle ... 107
Backrest upholstery ... 109
Stabilising Bar ... 110
Headrest with height adjustable push handles ... 111
Backrest, STD with head rest for SW46-50 ... 113
Headrest with height adjustable push handles for SW46-50 ... 116
Sideguard ... 118
Sideguard, aluminium with fender ... 118
Single Post Sideguard with Armpad ... 120
Plastic Sideguard, detachable ... 122
Single post tool height adjustable armrest ... 123
Desk sideguard ... 125
Armpad for Desk Sideguard ... 127
Armrest height adjustable, left/right ... 128
Carbon Sideguard with Fender & Aluminium Sideguard without Fender ... 129
Seat ... 131
Cross Brace ... 131
Seat Sling ... 135
Accessories ... 140
Caddy ... 140
Tool kit ... 141
Wheelchair Backback ... 142
Lap Belt with Fastener ... 143
Mobile Phone Case ... 144
Frame adapter for accessories ... 145
Transit Wheel ... 146
Upholstery ... 148
Anti-tip tube ... 149
Anti tip tubes swing away, aluminium lightweight ... 151
Tipping tube ... 153
Therapy table swingaway ... 154
Therapy table ... 156
Accessories ... 157
Tray table, used from SW 22 to 36 cm ... 158

Design Rear Wheel

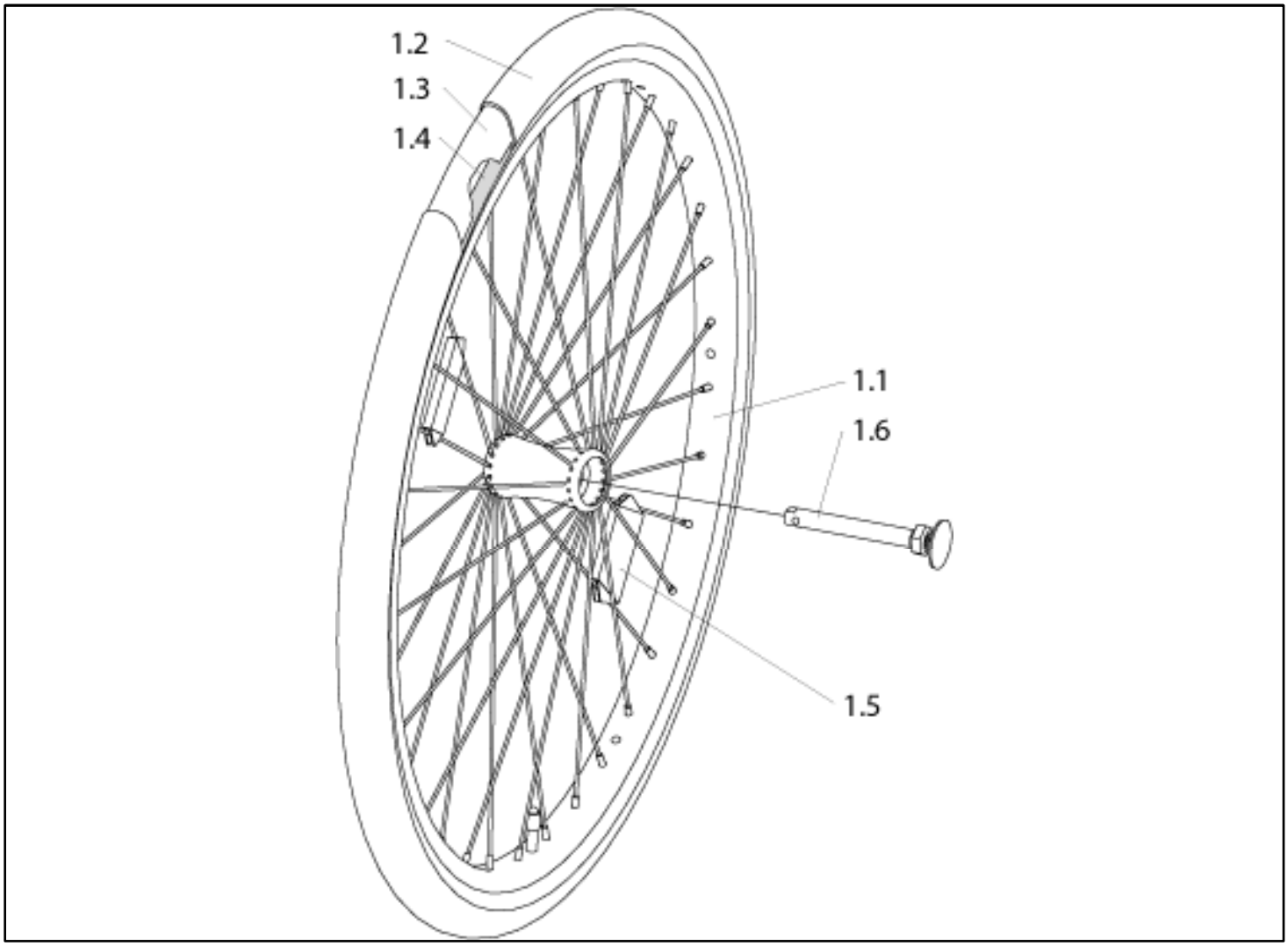

Pos	Itemnumber	Description	Comment
1.1, 1.5-1.6	000 851 315	24" rear wheel design, clear anodised with quick-release axle (without tyres)	
1.2-1.4	000 857 224.01	24" x 1" tyre cpl., Right Run (tyre, tube and tube protector)	
1.2-1.4	000857130.01	24" x 1" tyre, Schwalbe one (tyre, tube and tube protector)	
1.2-1.4	000 857 424	24" x 1" Downtown - Two grip tyre, complete	
1.2	000857130	24" x 1" tyre, Schwalbe one	
1.2	000 283 014.01	24"x1" tyre, Right Run	
1.2	000 283 037	24" Downtown - Two grip tyre	
-	000 283 017	24" x 1" solid tread	
-	000 283 036	24" tyre, Marathon Plus Evo, puncture resistance, rugged tread	
-	0002832560.01	26" tyre, Marathon Plus Evo, puncture resistance, rugged tread	
1.3	000 283 113	24" x 1" inner tube	
1.3	000 283 111-ET	24" Inner tube, for Downtown - Two grip	Pack of 10
1.4	000 283 160-ET	24" Tube protector	Pack of 10

Design Rear Wheel

Pos	Itemnumber	Description	Comment
1.4	000 283 160-ET	24" tube protector for Downtown - Two grip (19 mm)	Pack of 10
1.6	000 220 299	Quick-release axle for rear wheel design	
-	000280001-ET	Spoke reflector	10 pcs./pack
-	000283124-ET	26" x 1" inner tube, ETRTO 25-590	10 pcs./pack
-	000283153-ET	26" tube protector	10 pcs./pack
-	84607002	Quick Release for Design, Spinergy and Lightweight wheel with 6° Camber	

Universal Rear Wheel (Alu hub)

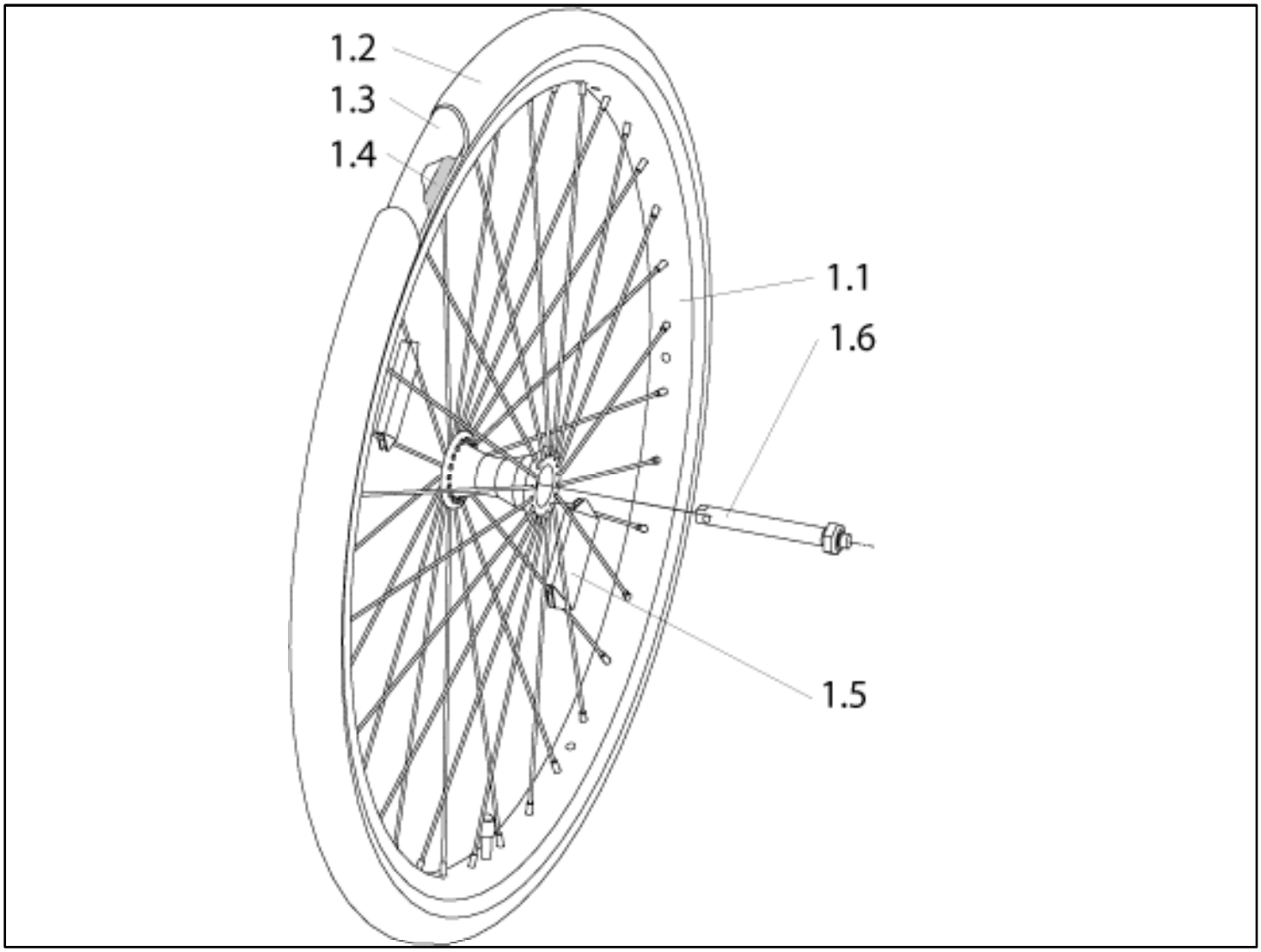

Pos	Itemnumber	Description	Comment
1.1, 1.5-1.6	000851262	22" Universal wheel, coated, with cross-spokes and quick-release axle (without tyre)	
1.1, 1.5-1.6	000851262.01	22" Universal wheel, coated, with straight spokes and quick-release axle (without tyre)	
1.1,1.5-1.6	000851264	24" Universal wheel, coated, with cross-spokes and quick-release axle (without tyre)	
1.1,1.5-1.6	000850262	22" Universal wheel, with quick-release axle, with cross spokes	
1.1, 1.5-1.6	000850262.01	22" Universal wheel, with quick-release axle, with straight spokes	
1.2-1.4	000857225	22" x 1" complete tyre, Right Run (tyre, tube and rim tape)	
1.2	000283016.01	Tyre 22"x1", Right Run	
1.3	000 283 114-ET	22" x 1" pneumatic inner tube	Pack of 10
1.3	000283114-ET	22" x 1" inner tube	Pack of 10
1.4	000283151-ET	22" rim tape	Pack of 10

Universal Rear Wheel (Alu hub)

Pos	Itemnumber	Description	Comment
1.1,1.5-1.6	000850264	24" Universal rear wheel, cross-spoked, clear anodized, with quick-release axle (without tyre, without handrim) (5172)	
1.2-1.4	000857224.01	24" x 1" tyre cpl., Right Run (tyre, tube and tube protector)	
1.2-1.4	000857424	24" x 1" Downtown - Two grip tyre	
-	000283015.01	24" x 1 3/8" solid tyre	
-	000283017	24" x 1" solid, soft tyre	
1.2	000283014.01	24"x1" tyre, Right Run	
1.2	000283037	24" Downtown - Two grip tyre	
-	000283036	24" tyre, Marathon Plus Evo, puncture resistance, rugged tread	
-	0002832560.01	26" tyre, Marathon Plus Evo, puncture resistance, rugged tread	
1.3	000283113	24" x 1" pneumatic inner tube	
1.3	000283111-ET	24" pneumatic inner tube for Downtown - Two grip	Pack of 10
-	000283124-ET	26" x 1" inner tube, ETRTO 25-590	10 pcs./pack
1.4	000283160-ET	24" Tube protector	Pack of 10
-	000283153-ET	26" tube protector	10 pcs./pack
1.5	000280001-ET	Spoke reflector	Pack of 10
1.6	000220253	Quick-release axle for Universal wheel and Active wheel	
-	84607003	Quick Release for Universalwheel with 6° Camber	

Lightweight Rear wheel

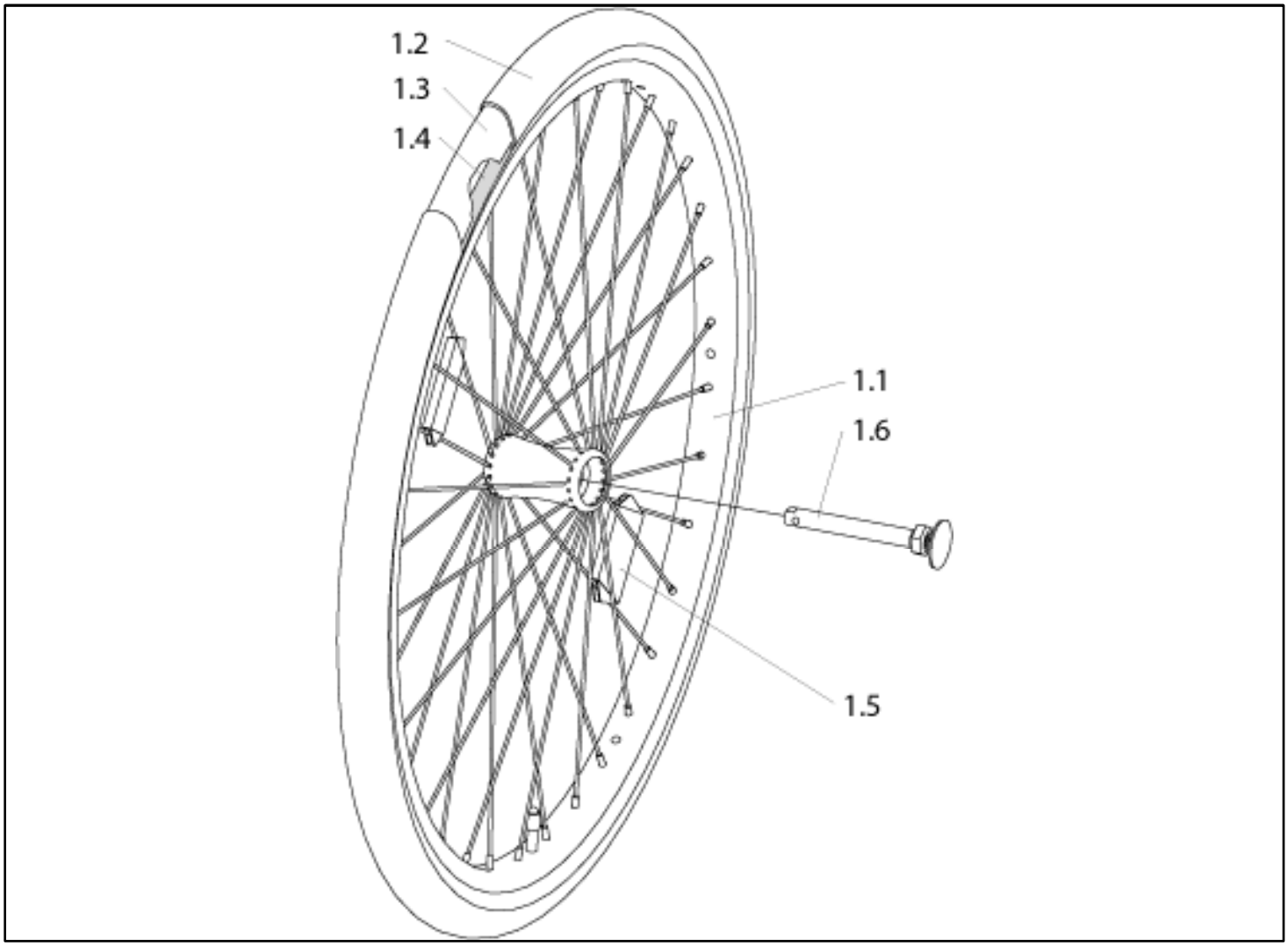

Pos	Itemnumber	Description	Comment
1.1, 1.5-1.6	000850281.01	22in lightweight rear wheel, anodized finish, with quick-release axle and handrim (without tyre)	
1.1, 1.5-1.6	000 850 270.01	24" lightweight rear wheel, anodized finish, with quick-release axle (without tyre)	
1.1, 1.5-1.6	000850273.01	25 inch light weight wheel, black anodized, with quick-release axle, with handrim (without tyre)	
1.2-1.4	000857130.01	24" x 1" tyre, Schwalbe one (tyre, tube and tube protector)	
1.2-1.4	000857225	22" x 1" complete tyre, Right Run (tyre, tube and rim tape)	
1.2-1.4	000857224.01	24" x 1" tyre, rugged tread, complete	
1.2	000283016.01	Tyre 22"x1", Right Run	
1.2-1.4	000 857 424	24" x 1" Downtown - Two grip tyre	
1.2	000857130	24" x 1" tyre, Schwalbe one	
1.2	000283014.01	24" tyre, rugged tread	
1.2	000 283 037	24" Downtown - Two grip tyre	

Lightweight Rear wheel

Pos	Itemnumber	Description	Comment
-	000 283 036	24" wheel, marathon plus, solid, rugged tread	
1.2	000857127	25in tyre, Marathon Plus, puncture resistance, rugged tread	
1.2	000857131	25in tyre, Schwalbe one	
1.3	000 283 113	24" x 1" pneumatic inner tube	10 pcs./pack
1.3	000 283 111-ET	24" pneumatic inner tube used with Downtown - Two grip	10 pcs./pack
1.4	000 283 165-ET	24" tube protector used with lightweight wheel	10 pcs./pack
1.4	000 283 160-ET	24" tube protector used with Downtown - Two grip (19 mm)	10 pcs./pack
1.6	000 220 299	Quick-release axle for Design rear wheel	
1.5	000 280 009-ET	Spoke reflector, orange (used with lightweight and Proton rear wheel)	10 pcs./pack
-	84607002	Quick Release for Design, Spinergy and Lightweight wheel with 6° Camber	

Spinergy Wheel

Pos	Itemnumber	Description	Comment
1.1+1.6	762459.01	24 inch Spinergy rear wheel, 18 spokes (black) (without tyre and handrim)	
1.1+1.6	762461.01	25 inch Spinergy rear wheel, 18 spokes (black) (without tyre and handrim)	
1.2-1.4	000857224.01	24" x 1" tyre cpl., Right Run (tyre, tube and tube protector)	
1.2	000857131	25in tyre, Schwalbe one	
1.2-1.4	000 857 424	Quick-release axle for mountain bike rear wheel	
1.2	000 283 037	24" pneumatic inner tube	Pack of 10
1.2	000 283 036	24" tyre, Marathon Plus Evo, puncture resistance, rugged tread	
1.2	000283014.01	Tyre 24" x 1", Right Run	
1.2	000 283 017	24" x 1" solid tyre	
1.2	000857130	24" x 1" tyre, Schwalbe one	
1.3	000 283 113	24" x 1" inner tube	

Spinergy Wheel

Pos	Itemnumber	Description	Comment
1.2	000857127	25in tyre, Marathon Plus, puncture resistance, rugged tread	
1.3	000 283 111-ET	24" inner tube	Pack of 10
1.4	000 283 160-ET	24" Tube protector	Pack of 10
1.3	066555-002	25-26 in inner tube, extra light, ETRTO 25-559	
1.5	000 280 001-ET	Spoke reflector	Pack of 10
1.6	000 220 228	Quick-release axle Spinergy 109 mm	used with 24" until cw 50/2010, used with 25" until cw 12/2011
-	000220299	Quick-release axle spinergy, design and light weight wheel, 99 mm	
	84607002	Quick Release for Design, Spinergy and Lightweight wheel with 6° Camber	

Drum brakes Rear wheel with brake

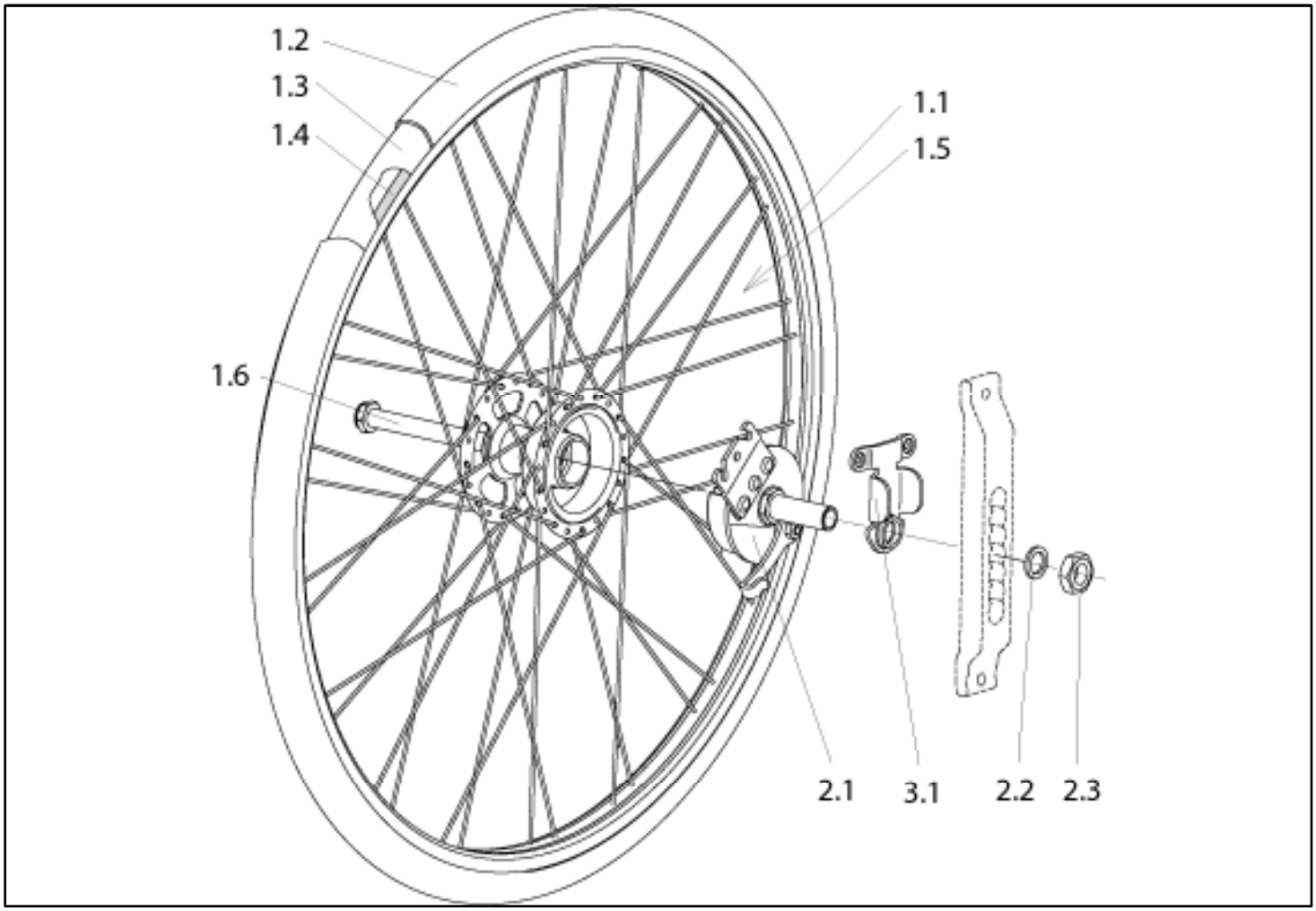

Pos	Itemnumber	Description	Comment
1.1,1.5-2.3	000 851 412	22" complete drum brake wheel with brake holder and quick-release axle (tyre and torque supports must be ordered separately)	right
1.1,1.5-2.3	000 751 412	22" complete drum brake wheel with brake holder and quick-release axle (tyre and torque supports must be ordered separately)	left
1.1,1.5-1.6	000 851 368.02	22" spoke wheel with quick-release axle	
1.2-1.4	000 857 225	22" x 1" tyre, Right Run	
1.2	000 283 016.01	Tyre 22"x1", Right Run	
1.3	000283114-ET	22" x 1" inner tube	Pack of 10
1.4	000 283 151-ET	22" rim tape	Pack of 10
1.1,1.5-2.3	000 851 414	24" complete drum brake wheel with brake holder and quick-release axle (tyre and torque supports must be ordered separately)	right
1.1,1.5-2.3	000 751 414	24" complete drum brake wheel with brake holder and quick-release axle (tyre and torque supports must be ordered separately)	left
1.1,1.5-1.6	000 851 369.02	24" spoke wheel with quick-release axle	
1.2-1.4	000 857 224.01	24" x 1" tyre cpl., Right Run (tyre, tube and tube protector)	

Drum brakes Rear wheel with brake

Pos	Itemnumber	Description	Comment
1.2-1.4	000 857 424	24" x 1" Downtown - Two grip tyre	
o.B.	000 283 015.01	24" x 1 3/8" solid tyre	
o.B.	000 283 017	24" x 1" solid, soft tyre	
1.2	000283014.01	Tyre 24" x 1", Right Run	
1.2	000 283 037	24" Downtown - Two grip tyre	
o.B.	000 283 036	24" tyre, Marathon Plus Evo, puncture resistance, rugged tread	
-	0002832560.01	26" tyre, Marathon Plus Evo, puncture resistance, rugged tread	
1.3	000 283 113	24" x 1" pneumatic inner tube	
1.3	000 283 111-ET	24" pneumatic inner tube for Downtown - Two grip	Pack of 10
1.4	000 283 160-ET	24" rim tape for Downtown - Two grip (19 mm)	Pack of 10
1.6	000 220 230	Design quick-release axle for drum brakes (from manufacturing week 49/2000)	
2.1-2.3	000 961 080	Brake holder, grey coated (from manufacturing week 49/2000)	Pair
2.2	000 138 002-ET	Lock washer VS 16	Pack of 10
3.1	760 861 023	Torque supports	can be used right and left
1.5	000 280 001-ET	Spoke reflector	Pack of 10
3.1	760 850 033	Torque support for rear wheel extension	RH
3.1	760 750 033	Torque support for rear wheel extension	LH

Max Grepp Ergo Para hand rim

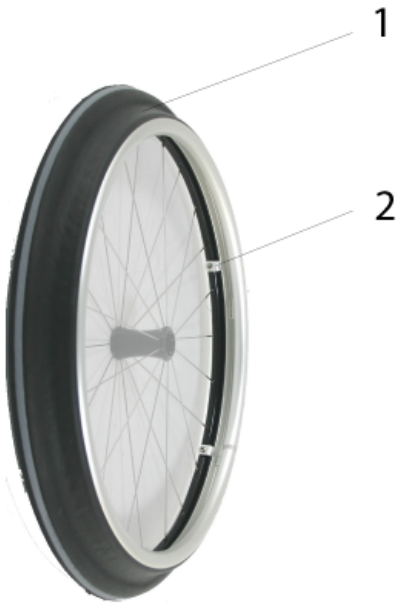

Pos	Itemnumber	Description	Comment
1 - 2	062542	Handrim 22in Max Grepp Ergo Para hand rim, used for Universal rear wheel cpl. with mounting accessories	
1 - 2	062543	Handrim 22in Max Grepp Ergo Para hand rim, used for Proton- or Lightweight Rear Wheel cpl. with mounting accessories	
1 - 2	062544	Handrim 24in Max Grepp Ergo Para hand rim, used for Universal wheel cpl. with mounting accessories	
1 - 2	062545	Handrim 24in Max Grepp Ergo Para hand rim, used for Proton- or Lightweight Rear Wheel cpl. with mounting accessories	
2	062546	Mounting accessories for Max Grepp Ergo Para hand rim, used for Universal rear wheel	
2	062547	Mounting accessories for Max Grepp Ergo Para hand rim, used for Proton- or Lightweight Rear Wheel	

Spoke guards

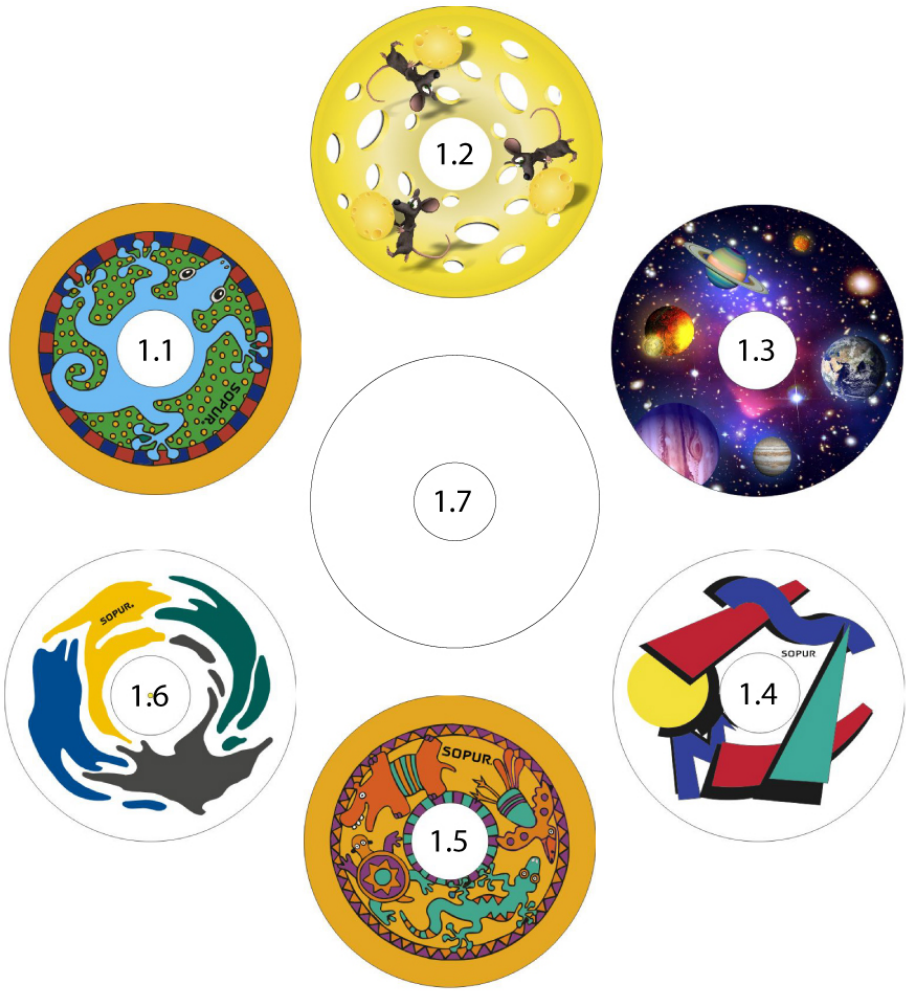

Pos	Itemnumber	Description	Comment
1.1	062551-027	22 inch spoke guard, Bibbo, cpl.	incl. Fasteners
1.2	062551-031	22 inch spoke guard, Cheese, cpl.	incl. Fasteners
1.3	062551-032	22 inch spoke guard, Galactica, cpl.	incl. Fasteners
1.4	062551-028	22 inch spoke guard, Graphic, cpl.	incl. Fasteners
1.5	062551-029	22 inch spoke guard, Fantasy, cpl.	incl. Fasteners
1.6	062551-030	22 inch spoke guard, Rotation, cpl.	incl. Fasteners
1.7	062551-033	22 inch spoke guard, transparent, cpl.	incl. Fasteners
1.1	062553-027	24 inch spoke guard, Bibbo, cpl.	incl. Fasteners

Pos	Itemnumber	Description	Comment
1.2	062553-031	24 inch spoke guard, Cheese, cpl.	incl. Fasteners
1.3	062553-032	24 inch spoke guard, Galactica, cpl.	incl. Fasteners
1.4	062553-028	24 inch spoke guard, Graphic, cpl.	incl. Fasteners
1.5	062553-029	24 inch spoke guard, Fantasy, cpl.	incl. Fasteners
1.6	062553-030	24 inch spoke guard, Rotation, cpl.	incl. Fasteners
1.7	062553-033	24 inch spoke guard, transparent, cpl.	incl. Fasteners
-	000118004-ET	Fastener for spoke guard	25 pcs./pack

Spoke guards, kids

Pos	Itemnumber	Description	Comment
1	062551-001	Spoke guard 22in cpl., Princess	incl. Fasteners
2	062551-002	Spoke guard 22in cpl., Dancing Bear	incl. Fasteners
3	062551-003	Spoke guard 22in cpl., Jungle Fever	incl. Fasteners
4	062551-004	Spoke guard 22in cpl., Superhero	incl. Fasteners
5	062551-005	Spoke guard 22in cpl., Happy Lions	incl. Fasteners
6	062551-006	Spoke guard 22in cpl., Water World	incl. Fasteners
7	062551-007	Spoke guard 22in cpl., Randolf	incl. Fasteners
8	062551-008	Spoke guard 22in cpl., Monkeys	incl. Fasteners

Pos	Itemnumber	Description	Comment
9	062551-009	Spoke guard 22in cpl., Pirates	incl. Fasteners
10	062551-010	Spoke guard 22in cpl., Tiger	incl. Fasteners
11	062551-011	Spoke guard 22in cpl., Zebra	incl. Fasteners
1	062553-001	Spoke guard 24in cpl., Princess	incl. Fasteners
2	062553-002	Spoke guard 24in cpl., Dancing Bear	incl. Fasteners
3	062553-003	Spoke guard 24in cpl., Jungle Fever	incl. Fasteners
4	062553-004	Spoke guard 24in cpl., Superhero	incl. Fasteners
5	062553-005	Spoke guard 24in cpl., Happy Lions	incl. Fasteners
6	062553-006	Spoke guard 24in cpl., Water World	incl. Fasteners
7	062553-007	Spoke guard 24in cpl., Randolf	incl. Fasteners
8	062553-008	Spoke guard 24in cpl., Monkeys	incl. Fasteners
9	062553-009	Spoke guard 24in cpl., Pirates	incl. Fasteners
10	062553-010	Spoke guard 24in cpl., Tiger	incl. Fasteners
11	062553-011	Spoke guard 24in cpl.,Zebra	incl. Fasteners
-	000118004-ET	Fastener used with spoke guards	Pack of 25

Spoke guards, teens

Pos	Itemnumber	Description	Comment
1	062551-012	Spoke guard 22in cpl., Abstract	incl. Fasteners
2	062551-013	Spoke guard 22in cpl., Racing	incl. Fasteners
3	062551-014	Spoke guard 22in cpl., Pool	incl. Fasteners
4	062551-015	Spoke guard 22in cpl., Oriental	incl. Fasteners
5	062551-016	Spoke guard 22in cpl., Dirt Race	incl. Fasteners
6	062551-017	Spoke guard 22in cpl., Feather	incl. Fasteners
7	062551-018	Spoke guard 22in cpl., Hot Wheels	incl. Fasteners
8	062551-019	Spoke guard 22in cpl., Chrome Wheel	incl. Fasteners

Pos	Itemnumber	Description	Comment
9	062551-020	Spoke guard 22in cpl., Graffiti	incl. Fasteners
1	062553-012	Spoke guard 24in cpl., Abstract	incl. Fasteners
2	062553-013	Spoke guard 24in cpl., Racing	incl. Fasteners
3	062553-014	Spoke guard 24in cpl., Pool	incl. Fasteners
4	062553-015	Spoke guard 24in cpl., Oriental	incl. Fasteners
5	062553-016	Spoke guard 24in cpl., Dirt Race	incl. Fasteners
6	062553-017	Spoke guard 24in cpl., Feather	incl. Fasteners
7	062553-018	Spoke guard 24in cpl., Hot Wheels	incl. Fasteners
8	062553-019	Spoke guard 24in cpl., Chrome Wheel	incl. Fasteners
9	062553-020	Spoke guard 24in cpl., Graffiti	incl. Fasteners
-	000118004-ET	Fastener used with spoke guards	Pack of 25

Spoke guards, adults

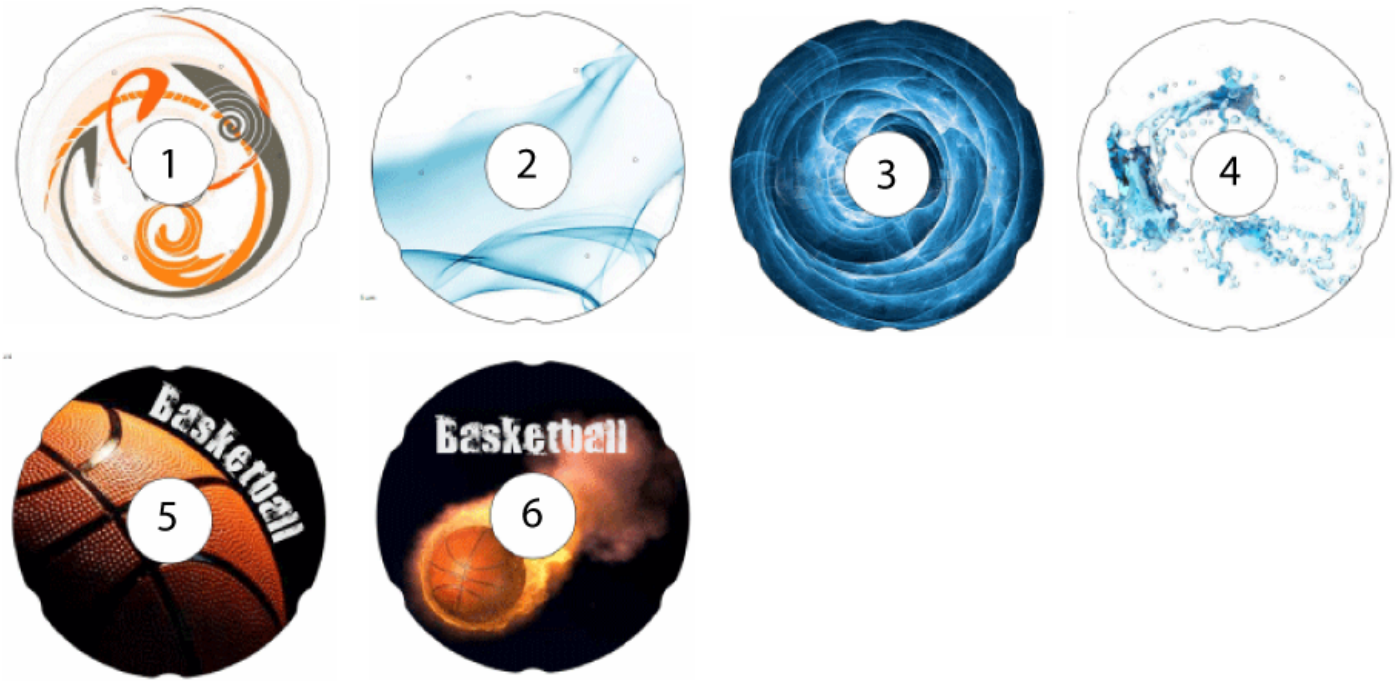

Pos	Itemnumber	Description	Comment
1	062551-021	Spoke guard 22in cpl., Creative	incl. Fasteners
2	062551-022	Spoke guard 22in cpl., Silk	incl. Fasteners
3	062551-023	Spoke guard 22in cpl., Space	incl. Fasteners
4	062551-024	Spoke guard 22in cpl., Flying Water	incl. Fasteners
5	062551-025	Spoke guard 22in cpl., Basketball	incl. Fasteners
6	062551-026	Spoke guard 22in cpl., Basketball 2	incl. Fasteners
1	062553-021	Spoke guard 24in cpl., Creative	incl. Fasteners
2	062553-022	Spoke guard 24in cpl., Silk	incl. Fasteners

Pos	Itemnumber	Description	Comment
3	062553-023	Spoke guard 24in cpl., Space	incl. Fasteners
4	062553-024	Spoke guard 24in cpl., Flying Water	incl. Fasteners
5	062553-025	Spoke guard 24in cpl., Basketball	incl. Fasteners
6	062553-026	Spoke guard 24in cpl., Basketball 2	incl. Fasteners
-	000118004-ET	Fastener used with spoke guards	Pack of 25

Screw in adapter

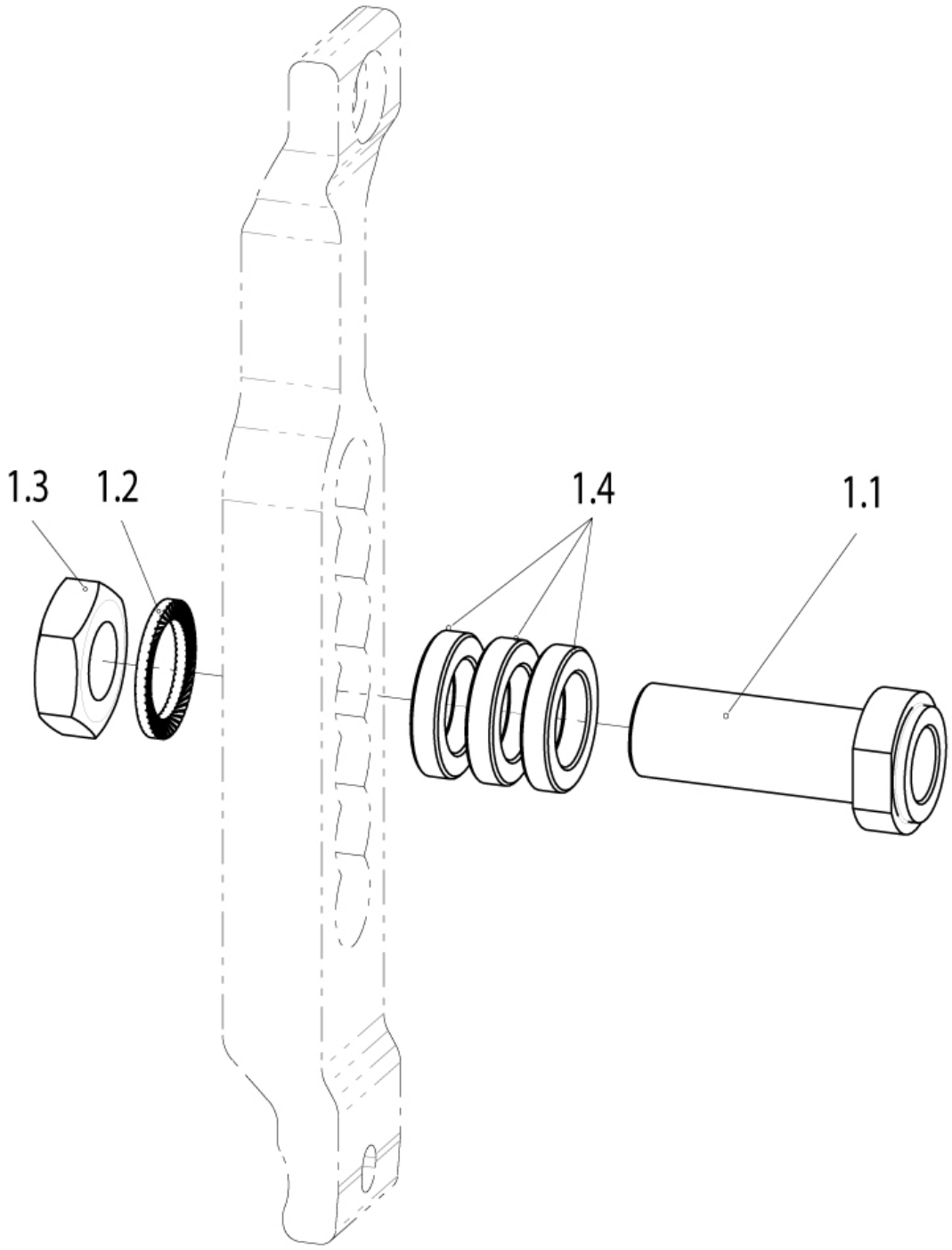

Pos	Itemnumber	Description	Comment
1.1-1.4	000853013	Screw-in adapter, long, cpl. (with 3 spacer rings: 5 mm)	
1.2	000138002-ET	Lock washer VS 16	Pack of 10
1.3	000220256-ET	Hex nut M 16 x 1	Pack of 10
1.4	000851071-ET	Spacer ring 5 mm	Pack of 10

Pos	Itemnumber	Description	Comment
-	000210004-ET	Grooved ball bearing DIN 625	Pack of 10

One-arm drive, connecting shaft

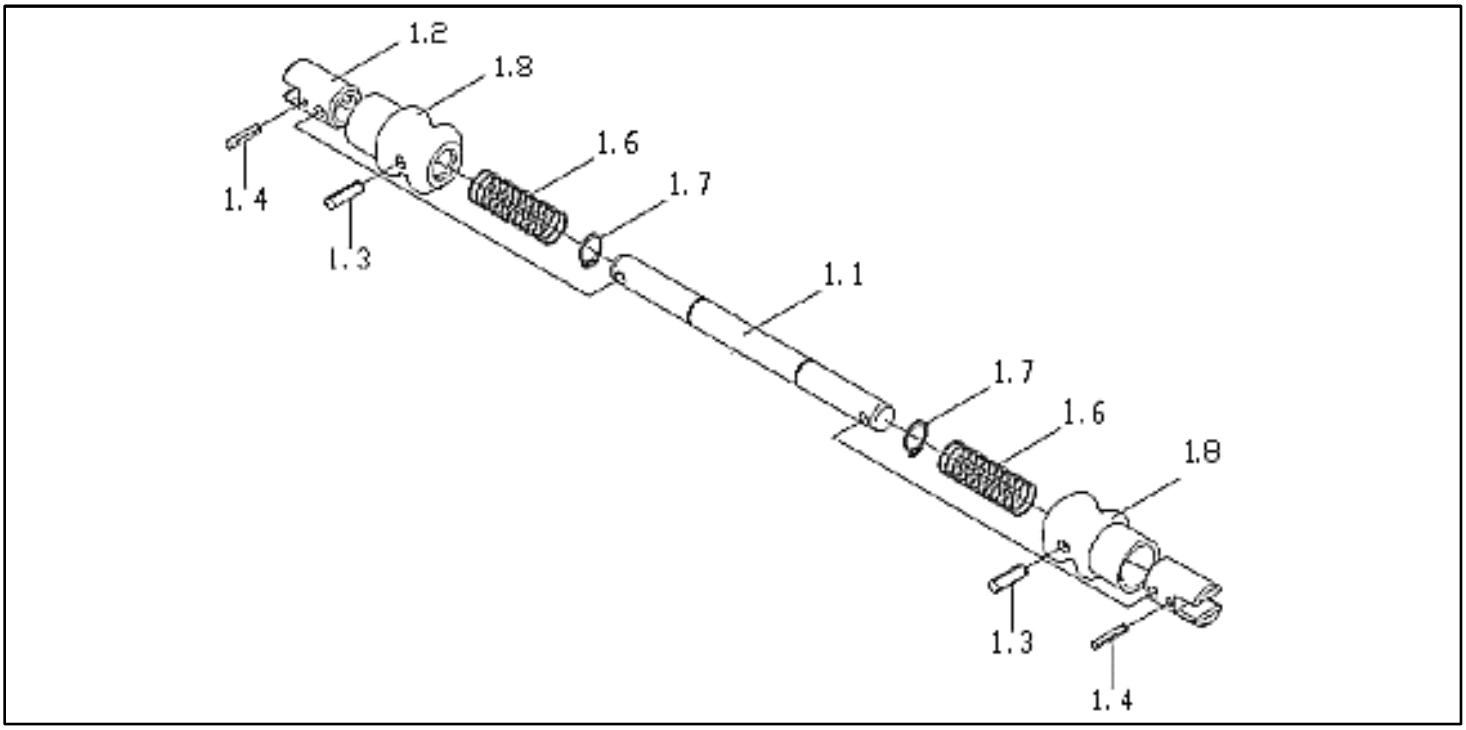

Pos	Itemnumber	Description	Comment
1.1 - 1.8	000 851 125	Connecting shaft for one-arm drive, rigid, complete	
1.3	000 154 051-ET	Cylindrical grooved pin 6 x 20 DIN 1473	Pack of 10
1.4	000 156 016-ET	Clamping pin 6 x 20 DIN 7343	Pack of 10
1.6	000 242 027	Compression spring	
1.7	000 180 004-ET	Locking ring 14 x 1 DIN 471	Pack of 10
1.8	000 851 122	Stop sleeve for one-arm drive for rigid connecting shaft	

One arm drive

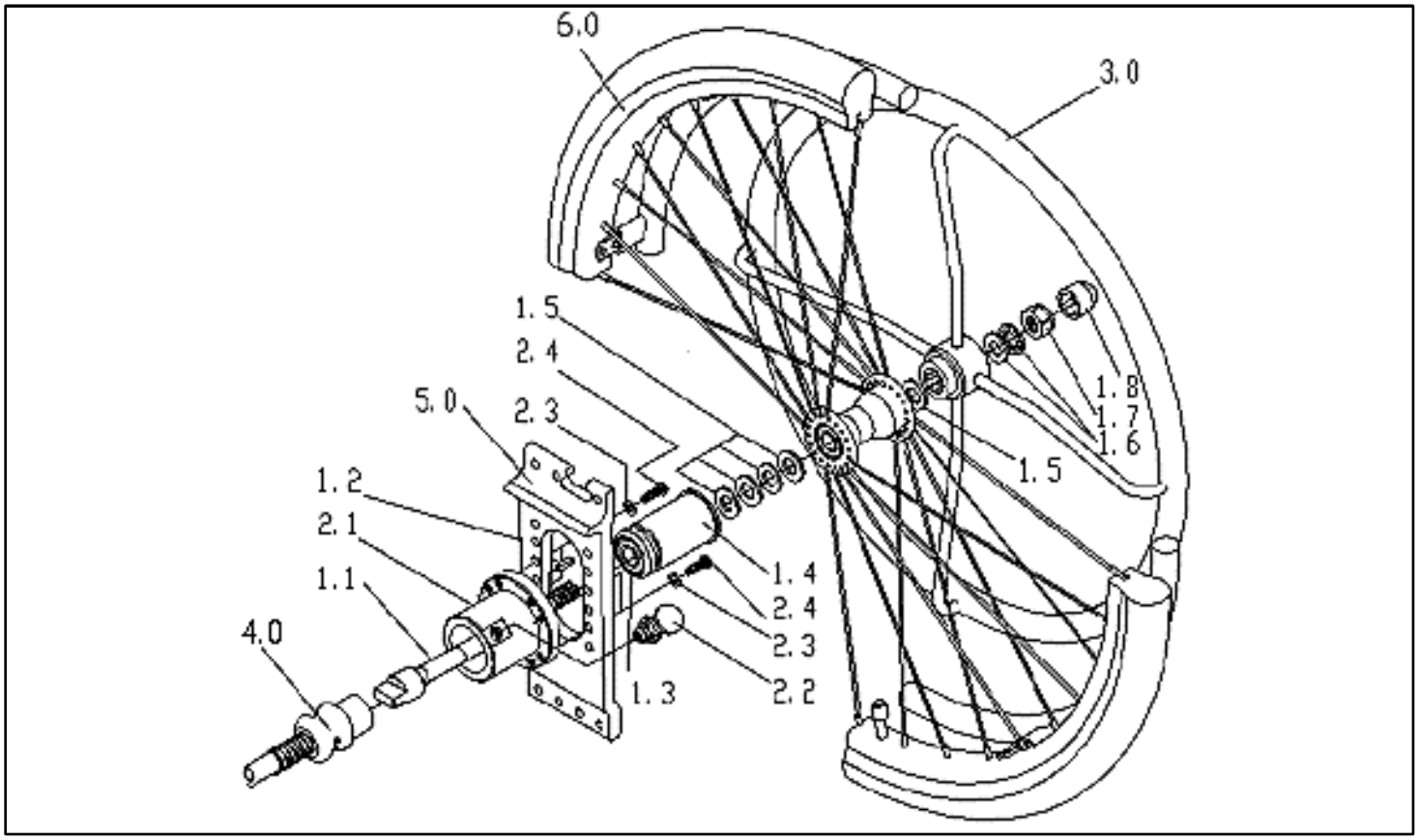

Pos	Itemnumber	Description	Comment
1.1 - 6.0	763 950 022	22" one-arm drive, complete. Includes rear wheel unit, revolving wheel unit, connecting shaft, axles, hubs, perforated plates and fitting accessories (without tyres)	right / left
1.1 - 6.0	763 950 024	24" one-arm drive, complete. Includes rear wheel unit, revolving wheel unit, connecting shaft, axles, hubs, perforated plates and fitting accessories. (without tyres)	right / left
1.1 - 3.0 6. 0	000 851 130	22" rear wheel unit for one-arm drive, complete. With spoke wheel, double handrim, one-arm drive axle, long and one-arm drive hub. (without tyre or perforated plate)	
1.1-3.0 6.0	000 851 131	24" rear wheel unit for one-arm operation, complete. With spoke wheel, double handrim, one-arm drive axle, long and one-arm drive hub. (without tyre or perforated plate)	
	000 851 132	22" revolving wheel unit for one-arm drive, complete. With spoke wheel, one-arm drive axle, short, one-arm drive hub and fitting accessories (without tyre or perforated plate)	
	000 851 133	24" revolving wheel unit for one-arm drive, complete. With spoke wheel, one-arm drive axle, short, one-arm drive hub and fitting accessories (without tyre or perforated plate)	
1.1	000 851 123	Short one-arm drive axle, 153.0 mm on revolving wheel side	
1.1	000 851 124	Long one-arm drive axle, 168.5 on rear wheel side	
1.2	000 170 002-ET	5 x 5 x 20 key, shape A DIN 6885	Pack of 5
1.2	000 170 001-ET	5 x 5 x 16 key, shape A DIN 6885	Pack of 5
1.3	000 210 004-ET	Grooved ball bearing DIN 625	Pack of 10

One arm drive

Pos	Itemnumber	Description	Comment
1.4	000 851 107	One-arm drive hub	
1.5	000 858 006-ET	Washer Ø 18 / 13 x 3 mm	Pack of 25
1.6	000 138 004-ET	Lock washer VS 12 (jagged washer)	Pack of 25
1.7	000 128 024-ET	Hex nut M 12 DIN 985	Pack of 25
1.8	000 282 071-ET	Hex protective cap SW 19 plastic, black	Pack of 10
2.1-2.4	000 851 109	One-arm drive hub receiver, complete	
2.2	000 232 003-ET	Snap bolts with nuts	Pack of 5
2.3	000 130 107-ET	A 6.4 washer DIN 125	Pack of 25
2.4	000 102 307.01-ET	Oval-head screw M 6 x 20 with Torx drive	Pack of 25
3.0	000 854 109	Handrim for one-arm drive	
5.0	760 850 038	Perforated plate for one-arm drive with fitting accessories, complete	right
5.0	760 750 038	Perforated plate for one-arm drive with fitting accessories, complete	left
4.0		Shaft for one-arm drive (see connecting shaft)	
	000 851 102	24" spoke wheel for one-arm drive with revolving wheel (without tyre)	
	000 851 117	22" spoke wheel for one-arm drive with revolving wheel (without tyre)	

Handrim

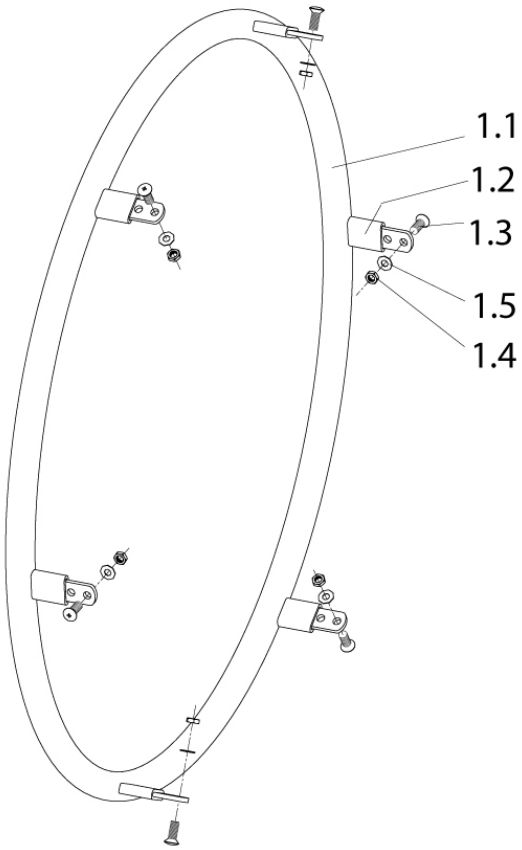

Pos	Itemnumber	Description	Comment
1.1-1.5	000 854 035.24	24" aluminium handrim, coloured	
1.1-1.5	000 854 024.22	22" handrim, stainless steel	
1.1-1.5	000 854 742	22" handrim, high supergrip	
1.1-1.5	066550-003	Lightweight handrim 24", aluminium, clear coated, incl. mounntig accessories	only close mountable
1.1-1.5	066516-003-ET	Lightweight-handrim 24", Aluminium, anodized, incl. mounting accessories	only close mountable
1.1-1.5	000 854 024.24	24" handrim, stainless steel	
1.1-1.5	000 854 624.24	24" handrim, stainless steel, for extra close mount	
1.1-1.5	000 854 044	24 " handrim, stainless steel, electro polished, middle, incl. mounting accessories, cpl.	
1.1-1.5	000 854 054	24" handrim, titanium for Universal wheel	
1.1-1.5	000 854 055	24" handrim, titanium, for Active wheel and lightweight wheel	
1.1-1.5	000 854 064	24" handrim, titanium, clear varnished for Universal wheel	

Pos	Itemnumber	Description	Comment
1.1-1.5	000 854 065	24" handrim, titanium, clear varnished for Active wheel and lightweight wheel	
1.1-1.5	000 854 026.28	24" handrim alu, silver anodised (from CW 33/07)	
1.1-1.5	000 854 026.30	24" handrim alu, silver anodised, clear coated (from CW 33/07)	
1.1-1.5	000 854 534	24" handrim, central Supergrip	must not be used with Proton and lightweight wheels
1.1-1.5	066551-003	Lightweight handrim 24", colour coated	only for lightweight wheel
1.1-1.5	000854900	Handrim 24 inch, Supergrip, black incl. mounting accessories	for Spinergy-, Proton- and lightweight wheel
1.1-1.5	000854901	Handrim 25 inch, Titan, blank, incl. mounting accessories	for Spinergy-, Proton- and lightweight wheel
1.1-1.5	000854902	Handrim 25 inch, Titan, clear coated, incl. mounting accessories	for Spinergy-, Proton- and lightweight wheel
1.1-1.5	000854903	Handrim 25 inch, Supergrip, black incl. mounting accessories	for Spinergy-, Proton- and lightweight wheel
1.1-1.5	000854904	Handrim 25 inch, stainless steel, incl. mounting accessories	for Spinergy-, Proton- and lightweight wheel
1.2-1.5	000 959 906-ET	Fitting accessories for close mount handrim, for 1 wheel	
1.2-1.5	000 959 913	Fitting accessories for extra close mount handrim, for 1 wheel	
1.2-1.5	000 959 908-ET	Fitting accessories for wide mount handrim, for 1 wheel	
1.3	000 102 061-ET	Oval-head screw M 5 x 12 DIN 7985	Pack of 25
1.4	000 128 005.01-ET	Hex nut M 5 DIN 985	Pack of 25
1.5	000 130 111-ET	A 5.3 washer DIN 125	Pack of 25
-	000 854 513	22" handrim cover black	
-	000 854 514	24" handrim cover black	

Knee lever wheel lock with frame fitting

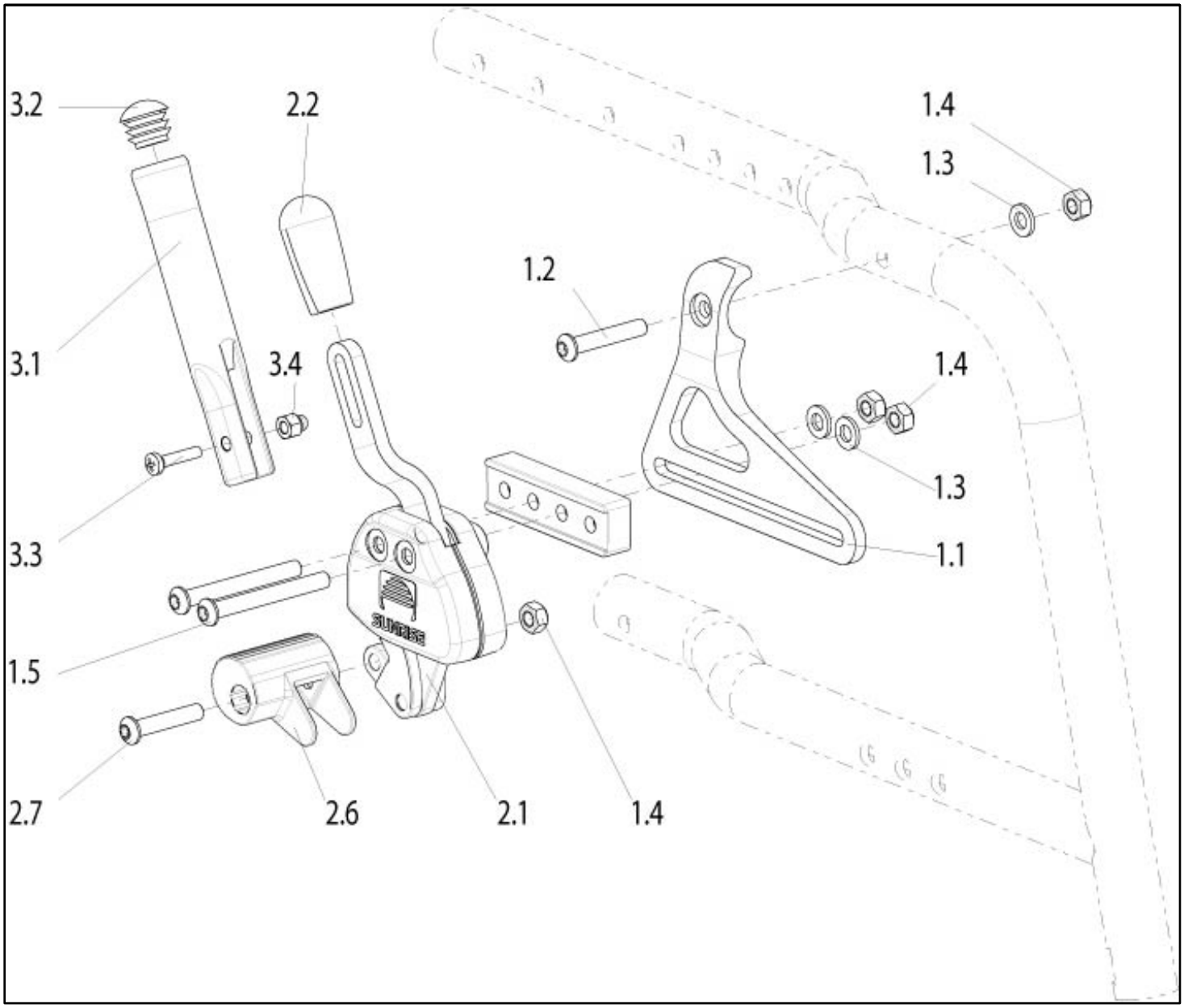

Pos	Itemnumber	Description	Comment
1.1-1.5	84606112	Frame fitting for brake, cpl. for abdu frame	Pair, for abdu frame only
1.1-2.7	84606113	Knee lever brake with frame fitting, complete for abdu frame	Pair, for abdu frame only
1.1-1.5	84406121	Frame fitting for brake, cpl. for abdu frame	Pair, for all frames excl. abdu frame
1.1-2.7	84406120	Knee lever brake with frame fitting, complete for abdu frame	Pair, for all frames excl. abdu frame
1.2	000102304.01-ET	Button head cap screw M 6 x 35 Torx-drive	25 pcs./pack
1.3	000130007-ET	A 6.4 washer DIN 125	25 pcs./pack

Knee lever wheel lock with frame fitting

Pos	Itemnumber	Description	Comment
1.4	000128007-ET	Hex nut M 6 DIN 985	25 pcs./pack
1.5	000102314.01-ET	Oval-head screw M 6 x 55 with Torx drive	25 pcs./pack
2.1, 2.6-2.8	000761250	Knee lever brake	left
2.1, 2.6-2.8	000861250	Knee lever brake	right
2.1, 2.6-2.8	000961250	Knee lever brakes	Pair
2.2	000861156-ET	Cover cap for brake lever, black	5 pcs./pack
2.6-2.8	000861252	Brake bolts cpl.	left/right useable
2.7	000102312.01-ET	oval-head screw M 6 x 32 with Torx drive	25 pcs./pack
3.1-3.3+1.4	000861253	Brake lever extension cpl.	Pair
3.3	000102066-ET	Oval-head screw M 5 x 20 DIN 7985	12 pcs./pack
3.4	000128006-ET	Cap nut M5 DIN 986	25 pcs./pack

Brake Lever Extension

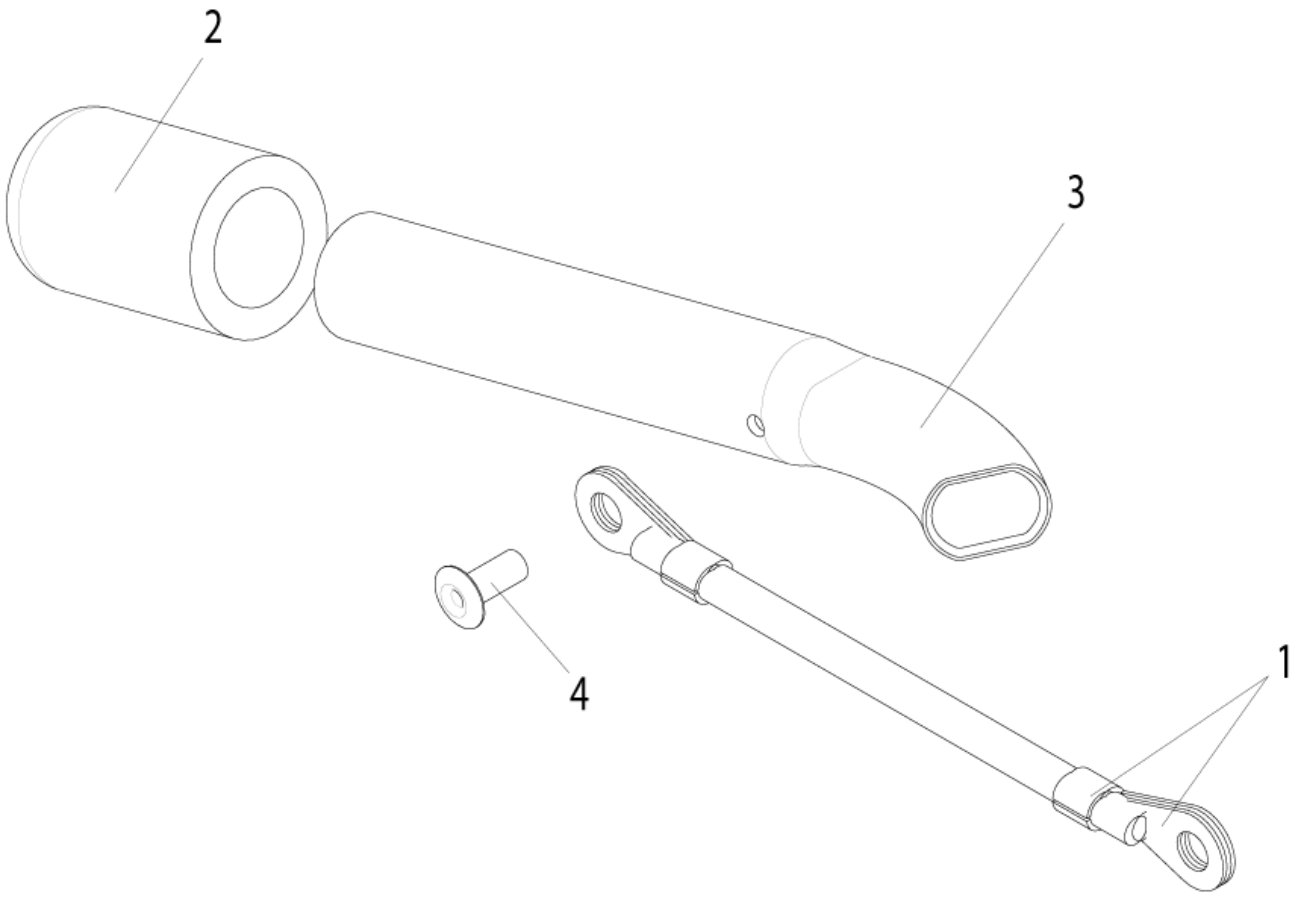

Pos	Itemnumber	Description	Comment
1-4	104325-ET	Brake lever extension, complete	2 pcs./pack

Compact Brake

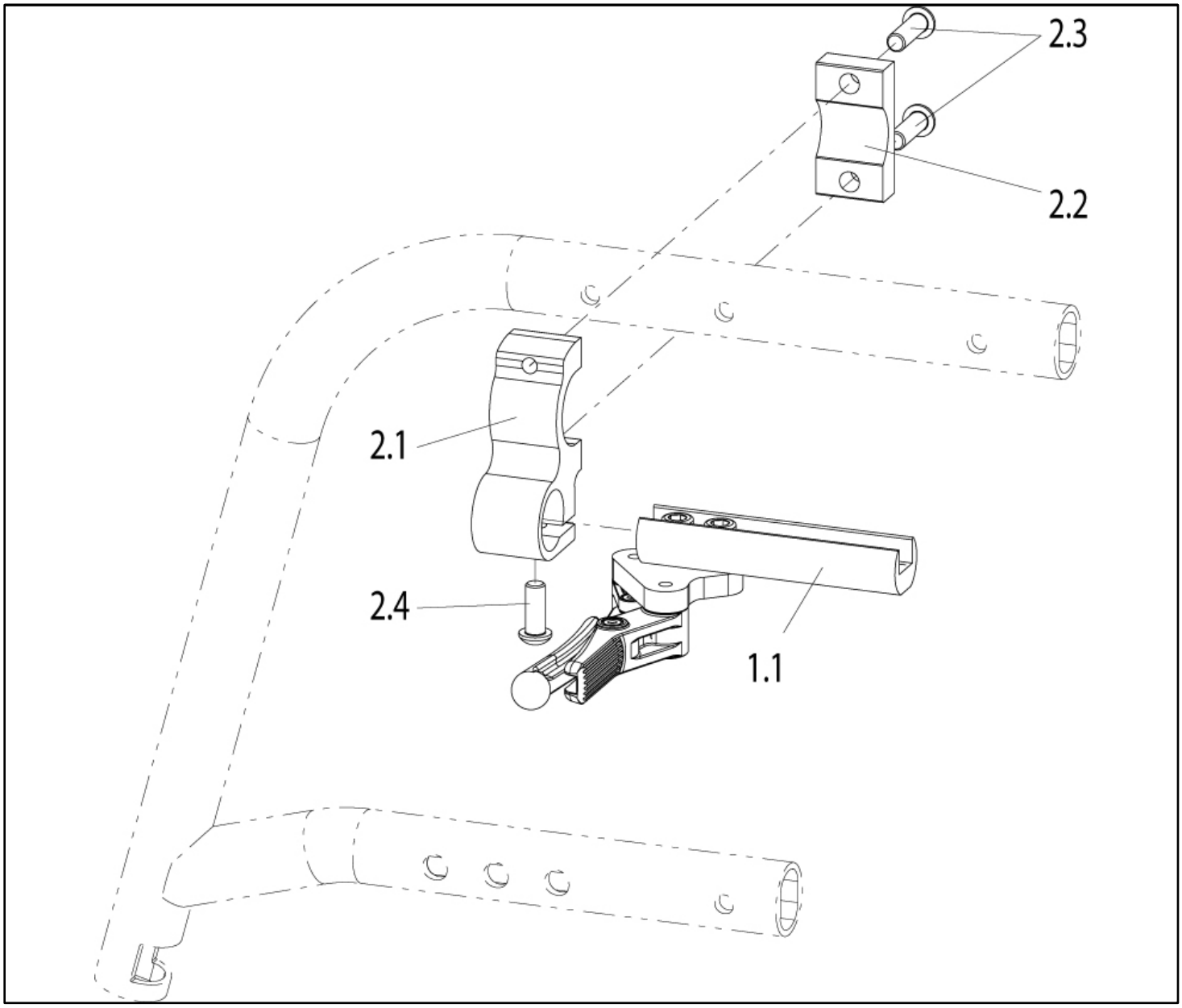

Pos	Itemnumber	Description	Comment
1.1-2.4	072607	Compact Brake with Fitting accessories complete	Pair
1.1-2.4	072608	Compact Brake with Fitting accessories complete	LH, starting week 15/2012
1.1-2.4	072609	Compact Brake with Fitting accessories complete	RH, starting week 15/2012
1.1	066608-001	Compact brake	LH
1.1	066608-002	Compact brake	RH
2.2-2.4	072606-ET	Fitting accessories for Brake	can be used right & left
2.3	000102307.01-ET	Lens head screw M 6 x 20 with Tuflock, Torx	Pack of 25
2.4	000102309.01-ET	Lens head screw M 6 x 16 with Tuflock, Torx	Pack of 25

Integrated sideguard brake - Safari brake

Integrated sideguard brake - Safari brake

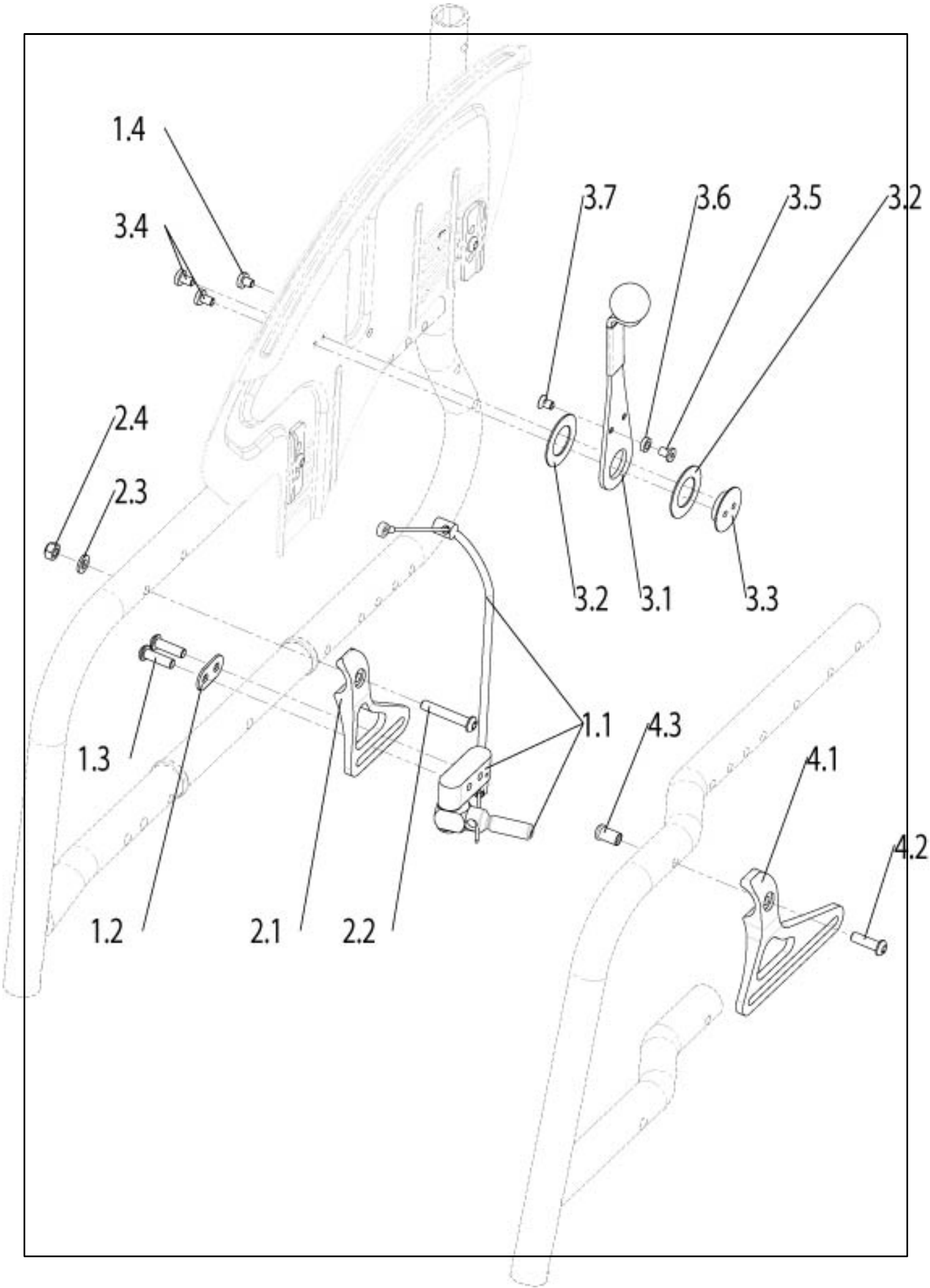

Pos	Itemnumber	Description	Comment
1.1, 1.4	062634-002	Wheel lock mechanism with bowden cable	LH
-	062634-001	Wheel lock mechanism with bowden cable	RH
1.1-2.4	84606006-000	Safari wheel lock (integrated into side guard) incl. frame attachment (for FF Frame/SA Frame)	Pair
1.1-2.4	84606006-001	Safari wheel lock (integrated into side guard) incl. frame attachment (for FF Frame/SA Frame)	LH
1.1-2.4	84606006-002	Safari wheel lock (integrated into side guard) incl. frame attachment (for FF Frame/SA Frame)	RH
1.1-1.4,4.1-.4.3	84606005-000	Safari wheel lock (integrated into side guard) incl. frame attachment (forAbdu Frame)	Pair
1.1-1.4,4.1-.4.3	84606005-001	Safari wheel lock (integrated into side guard) incl. frame attachment (forAbdu Frame)	LH
1.1-1.4,4.1-.4.3	84606005-002	Safari wheel lock (integrated into side guard) incl. frame attachment (forAbdu Frame)	RH
1.3	058901-001-ET	Socket head cap screw M 6 x 20 - ISO 7380	25 pcs./pack
1.4	103184-001-ET	Socket head cap screw M 5 x 8 - ISO 7380	10 pcs./pack
4.1-4.3	84606114	Frame adaptor incl. mounting accessories for Abdu frame	Pair
2.1-2.4	84606115	Frame adaptor incl. mounting accessories for FF Frame /SA Frame	Pair
2.2	000102304.01-ET	Lense Screw M6x35 Torx	25 pcs./pack
1.3/2.3	000130007-ET	Washer A6,4 DIN125	10 pcs./pack
2.4	000128007-ET	Nut M6 - DIN985	25 pcs./pack
3.1-3.7	062635	Wheel lock lever with pivot parts cpl.	LH/RH useable
3.1	062626-ET	Wheel lock lever cpl.	LH/RH useable
3.4-3.7	062636	Pivot for bowden cable attachment	LH/RH useable
3.7	000104130-ET	Counter sunk screw M 4 x 10 - DIN 7991	10 pcs./pack
3.4	000104129-ET	Socket head cap screw M 5 x 6 - ISO 7380	10 pcs./pack
4.2	000102307.01-ET	Oval-head screw M6x20 with Torx drive	25 pcs./pack
4.3	840826007-ET	Lense screw M6x20	25 pcs./pack
1.2	054435	double washer	

Integrated sideguard brake - Safari brake -, Attendant

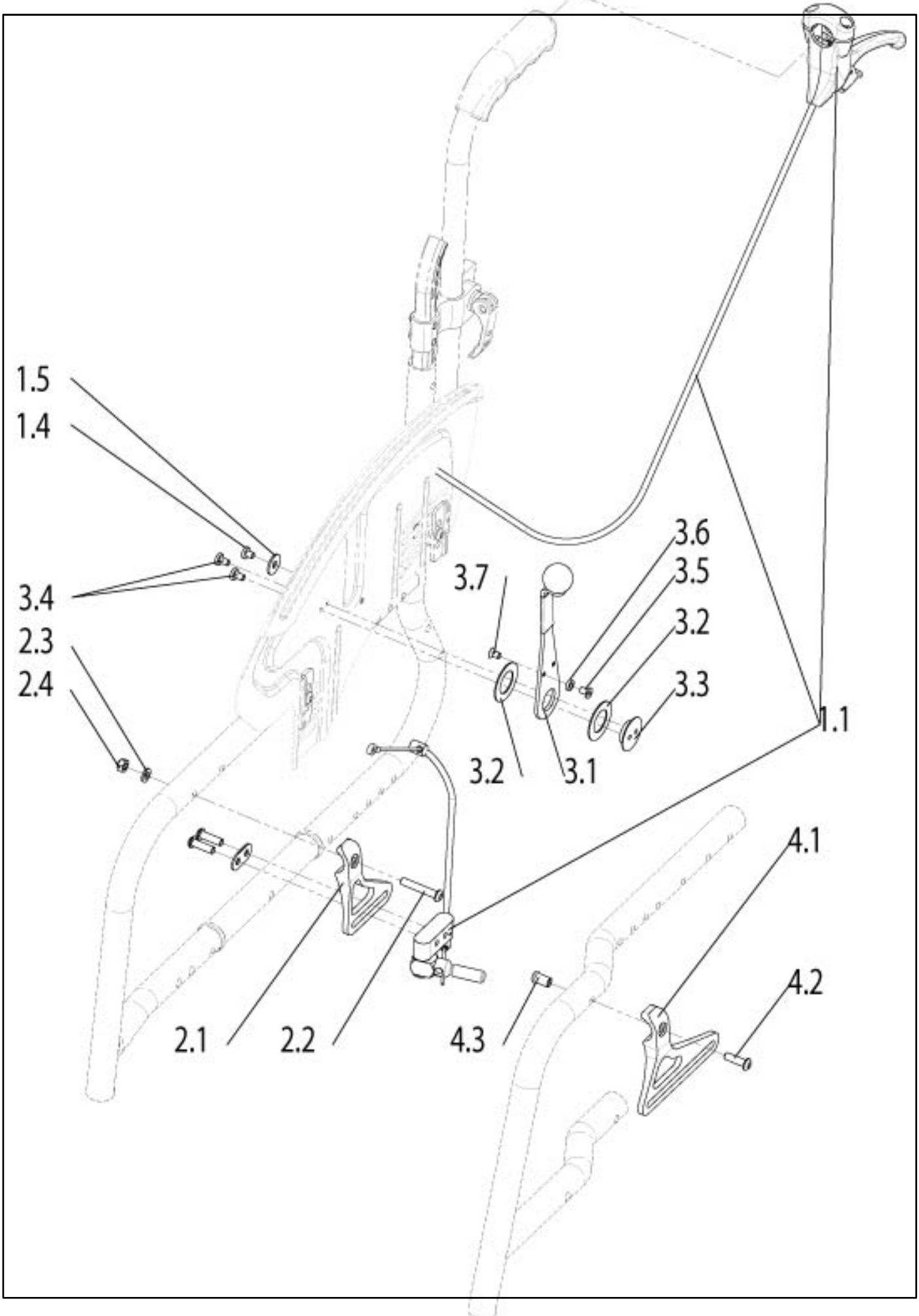
1.5
1.4
3.4
2.3
2.4
3.7
3.6
3.5
3.2
3.3
3.2
3.1
1.1
4.1
4.2
4.3
2.1
2.2

Integrated sideguard brake - Safari brake -, Attendant

Pos	Itemnumber	Description	Comment
1.1, 1.4-1.5	062643-002	Attendant Safari wheel lock mechanism with cable cpl.	LH
-	062643-001	Attendant Safari wheel lock mechanism with cable cpl.	RH
1.3	058901-001-ET	Socket head cap screw M 6 x 20 - ISO 7380	25 pcs./pack
1.5	103184-001-ET	Washer A 6,4 - DIN 9021	25 pcs./pack
1.4, 3.4	103184-001-ET	Socket head cap screw M 5 x 8 - ISO 7380	10 pcs./pack
4.1-4.3	84606114	Frame adaptor incl. mounting accessories for Abdu frame	Pair
2.1-2.4	84606115	Frame adaptor incl. mounting accessories for FF Frame /SA Frame	Pair
2.2	000102304.01-ET	Lense Screw M6x35 Torx	25 pcs./pack
2.3	000130007-ET	Washer A6,4 DIN125	10 pcs./pack
2.4	000128007-ET	Nut M6 - DIN985	25 pcs./pack
3.1-3.7	062635	Wheel lock lever with pivot parts cpl.	LH/RH useable
3.1	062626-ET	Wheel lock lever cpl.	LH/RH useable
3.4-3.7	062636	Pivot for bowden cable attachment	LH/RH useable
3.7	000104130-ET	Counter sunk screw M 4 x 10 - DIN 7991	10 pcs./pack
4.3	840826007-ET	Sleeve nut M6 x 15.2	10 pcs./pack

One arm brake

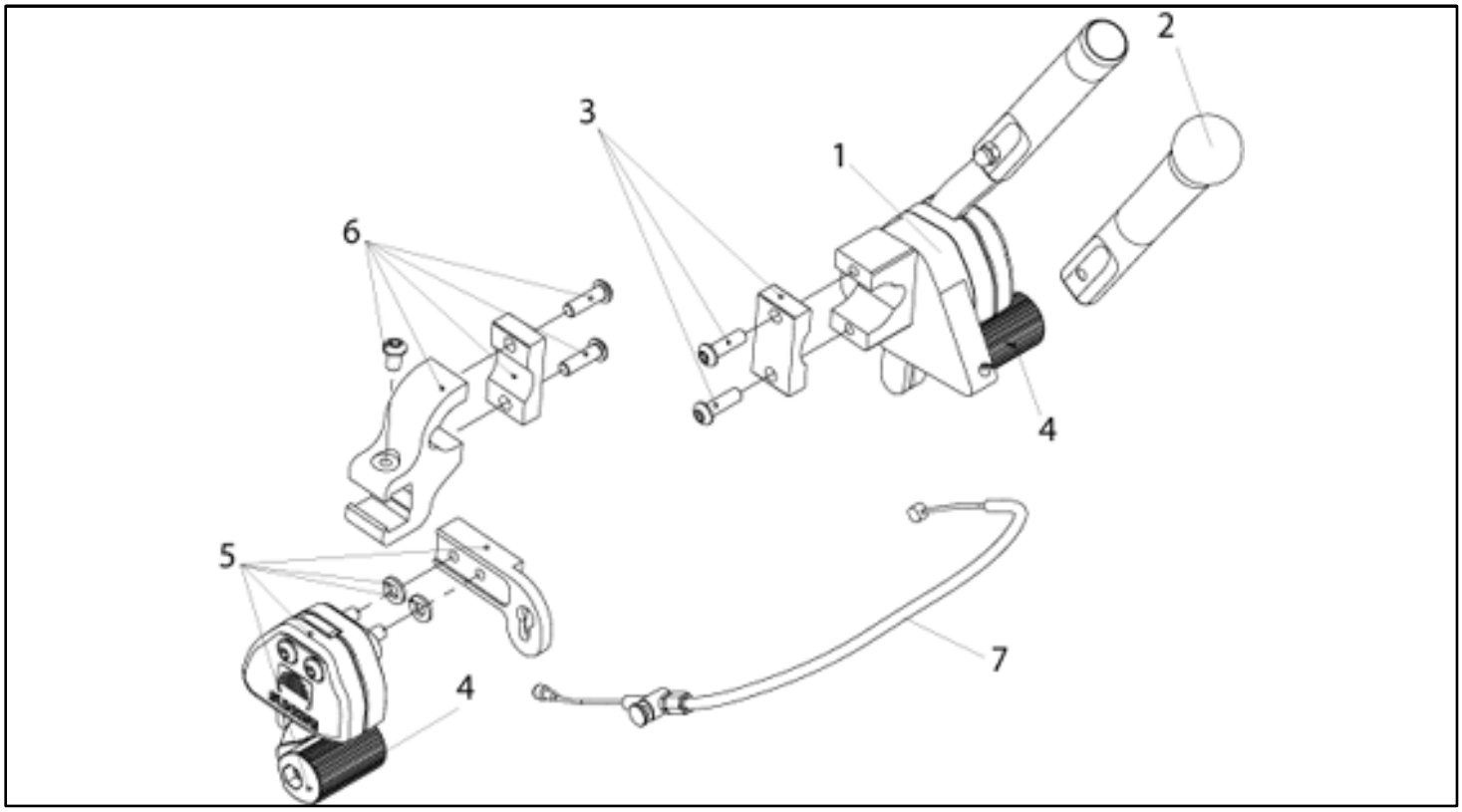

Pos	Itemnumber	Description	Comment
1 - 7	000 862 240	One-arm brake with activation, complete	right
-	000 762 240	One-arm brake with activation, complete	left
1 - 4	000 862 220	One-arm brake, activation side, complete	right
-	000 762 220	One-arm brake, activation side, complete	left
4 - 6	000 862 230	One-arm brake, revolving side, complete	right
-	000 762 230	One-arm brake, revolving side, complete	left
2	000 861 253	Brake lever extension, complete	
-	000 102 066-ET	Oval-head screw M 5 x 20 DIN 7985	Pack of 12
-	000 128 006-ET	Hex nut M5 DIN 985	Pack of 25
3	000 862 218	Fitting for activation side, complete	can be used right and left
-	000 102 304.01-ET	Oval-head screw M 6 x 20 with Torx drive	Pack of 25
4	000 861 252	Brake bolts, complete	
-	000 102 312.01-ET	Oval-head screw M 6 x 32 with Torx drive	Pack of 25
-	000 128 007-ET	Hex nut M6 DIN 985	Pack of 25
5	000 862 229	One-arm brake on revolving side	right
5	000 762 229	One-arm brake on revolving side	left
6	000 861 251	Fitting for revolving side, complete	can be used right and left

One arm brake

Pos	Itemnumber	Description	Comment
-	000 102 307.01-ET	Oval-head screw M 6 x 20 with Torx drive	Pack of 25
-	000 102 310.01-ET	Oval-head screw M 6 x 10 with Torx drive	Pack of 25
7	000 862 223.01	Cables for one-arm brake, short, complete	SW 24-30
7	000 862 223.02	Cables for one-arm brake, medium, complete	SW 32-40
7	000 862 223.03	Cables for one-arm brake, long, complete	SW 42-50

Activation for Drum brake/ Quick release axle

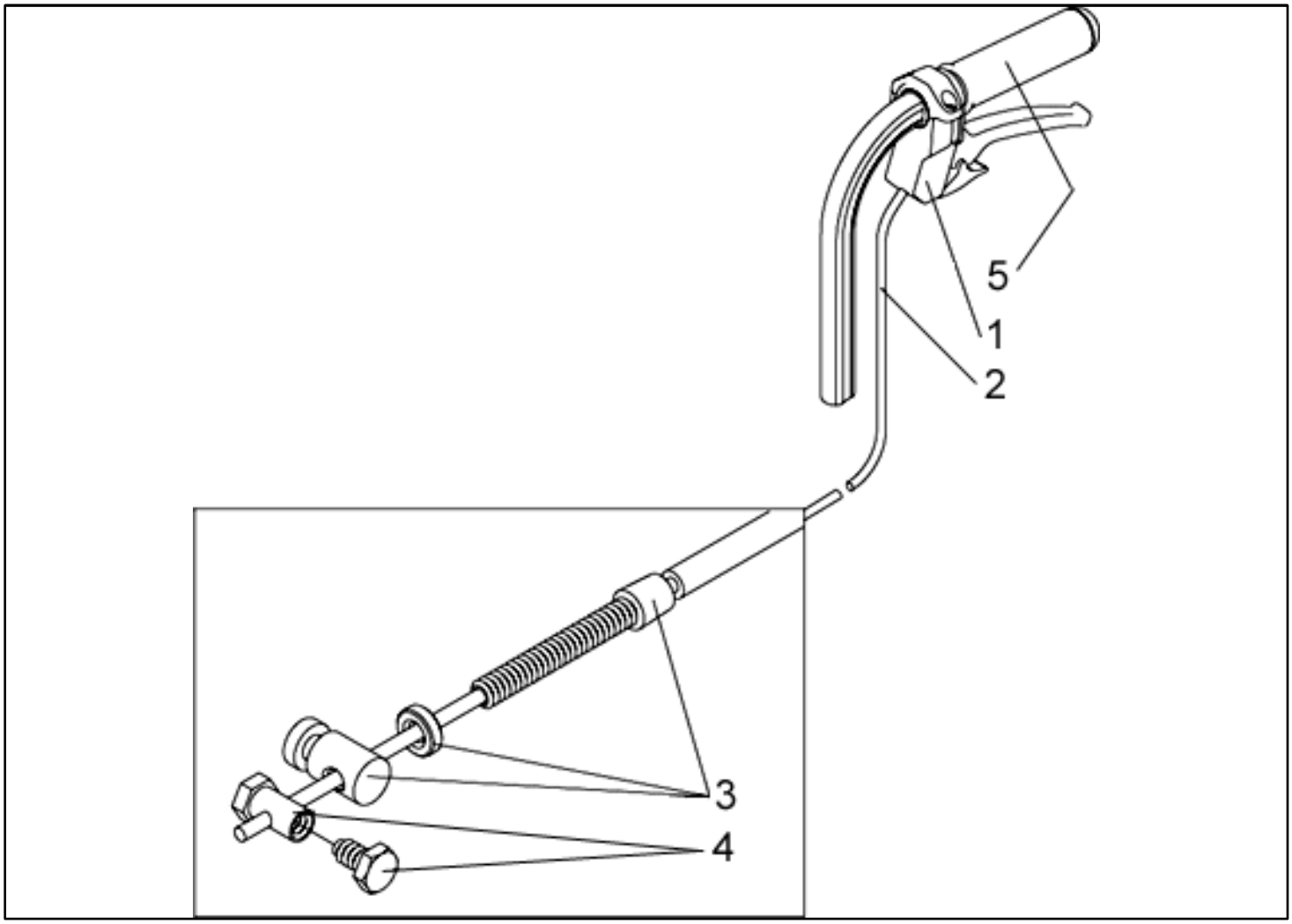

Pos	Itemnumber	Description	Comment
1-4	000 861 012	Activation for drum brakes/quick-release axle, complete (standard back tube)	
1-4	000 861 014	Activation for drum brake	
3-4	000 228 031	Accessories for cables	
1	000 228 022	Activation lever	
2	000 228 030	Cables	
4	760 861 017-ET	Sleeve nut with screw	pack of 10
5	71104051-001-ET	Handgrip used with drum brake push handle	pack of 10

Footrest Aluminum Version

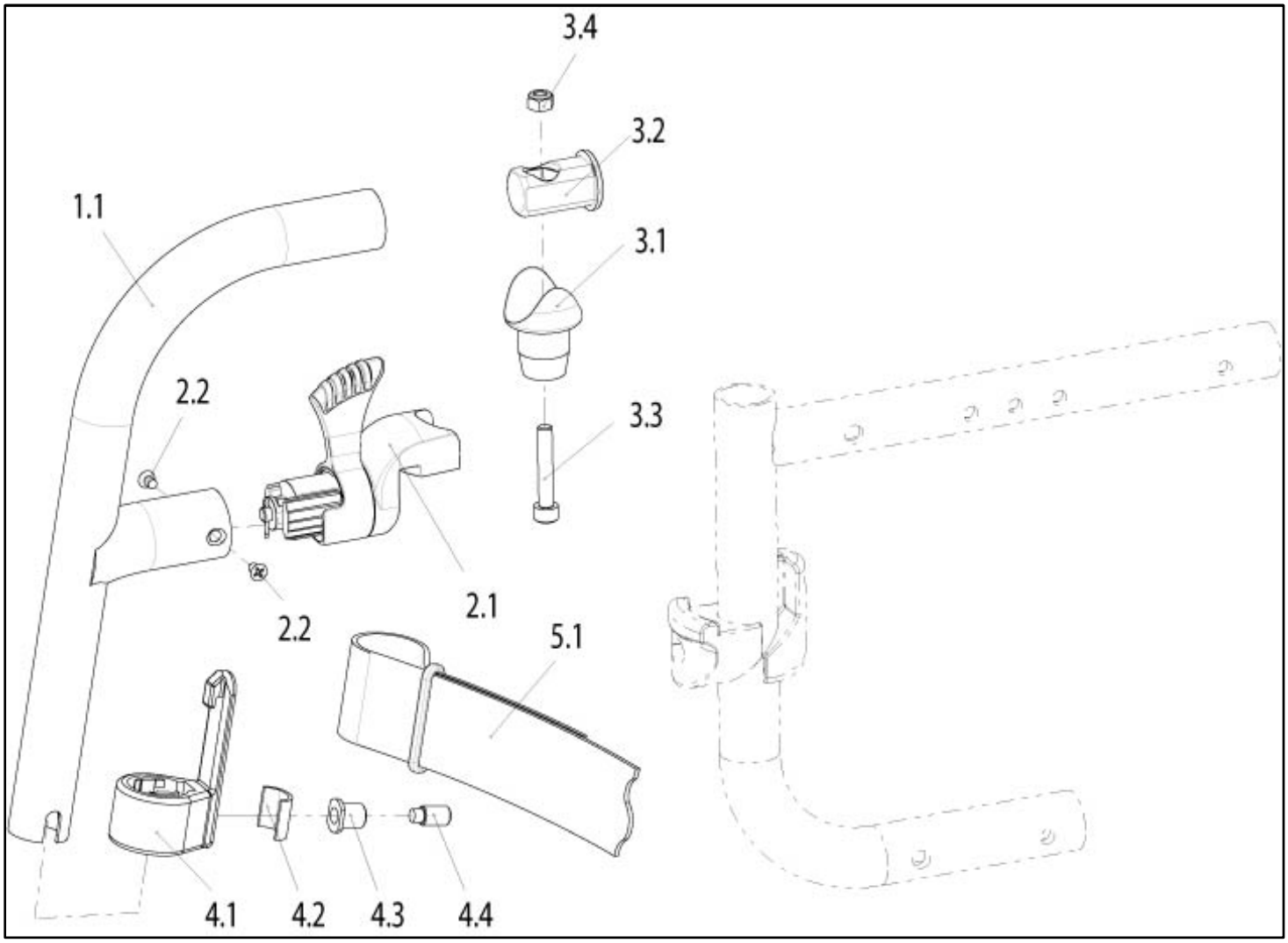

Pos	Itemnumber	Description	Comment
2.2	000112013-ET	Countersunk screw DIN 7981 2.9 x 6.5 Torx	Pack of 25
3.1-3.4	76705022	Swing Away equipment cpl.	left/right useable
3.3	103496-007-ET	Cheese Head Screw DIN 912 M8 x 30	Pack of 25
3.4	000128018-ET	Hex nut - DIN 985 - M8	Pack of 25
4.1 - 4.4	76705023	Calf strap Bracket with Footrestclamp complete (1Side)	
4.2	064918	Push joint for footrest assembly	Pack of 10
4.3	76705024	Nut for footrest assembly	pack of 2
4.4	066903-001-ET	Headless screw M8 x 16 DIN 915	Pack of 25
5.1	000813004	Calf strap SW 30 - 36 cm, complete	
5.1	000813006	Calf strap SW 38 - 54 cm, complete	
2.1-2.2	76705021	Locking mechanism complete	
1.1-4.4	07202001-001	Hanger Alu 70 Degree cpl. Mattsilver 450 (1 Side)	
1.1-4.4	07202001-002	Hanger Alu 80 Degree cpl. Mattsilver 450 (1 Side)	

Pos	Itemnumber	Description	Comment
1.1-4.4	07202002-001	Hanger Alu 70 Degree cpl. Silver (475) (1 Side)	
1.1-4.4	07202002-002	Hanger Alu 80 Degree cpl. Silver (475) (1 Side)	
1.1-4.4	07202003-001	Hanger Alu 70 Degree cpl. Sun Yellow 1018 (1 Side)	
1.1-4.4	07202003-002	Hanger Alu 80 Degree cpl. Sun Yellow 1018 (1 Side)	
1.1-4.4	07202004-001	Hanger Alu 70 Degree cpl. Matt lime (456) (1 Side)	
1.1-4.4	07202004-002	Hanger Alu 80 Degree cpl. Matt lime (456) (1 Side)	
1.1-4.4	07202005-001	Hanger Alu 70 Degree cpl. Blue (5005) (1 Side)	
1.1-4.4	07202005-002	Hanger Alu 80 Degree cpl. Blue (5005) (1 Side)	
1.1-4.4	07202006-001	Hanger Alu 70 Degree cpl. Brillant marine (426) (1 Side)	
1.1-4.4	07202006-002	Hanger Alu 80 Degree cpl. Brillant marine (426) (1 Side)	
1.1-4.4	07202007-001	Hanger Alu 70 Degree cpl. Ruby Red (3003) (1 Side)	
1.1-4.4	07202007-002	Hanger Alu 80 Degree cpl. Ruby Red (3003) (1 Side)	
1.1-4.4	07202008-001	Hanger Alu 70 Degree cpl. Brillant Red (420) (1 Side)	
1.1-4.4	07202008-002	Hanger Alu 80 Degree cpl. Brillant Red (420) (1 Side)	
1.1-4.4	07202009-001	Hanger Alu 70 Degree cpl. Silver Texture (300) (1 Side)	
1.1-4.4	07202009-002	Hanger Alu 80 Degree cpl. Silver Texture (300) (1 Side)	
1.1-4.4	07202010-001	Hanger Alu 70 Degree cpl. Graphitmetallic 414 (1 Side)	
1.1-4.4	07202010-002	Hanger Alu 80 Degree cpl. Graphitmetallic 414 (1 Side)	
1.1-4.4	07202011-001	Hanger Alu 70 Degree cpl. Platinmetallic 314 (1 Side)	
1.1-4.4	07202011-002	Hanger Alu 80 Degree cpl. Platinmetallic 314 (1 Side)	
1.1-4.4	07202012-001	Hanger Alu 70 Degree cpl. Matt black (9105) (1 Side)	
1.1-4.4	07202012-002	Hanger Alu 80 Degree cpl. Matt black (9105) (1 Side)	
1.1-4.4	07202013-001	Hanger Alu 70 Degree cpl. Signal white (9003) (1 Side)	
1.1-4.4	07202013-002	Hanger Alu 80 Degree cpl. Signal white (9003) (1 Side)	
1.1-4.4	07202014-001	Hanger Alu 70 Degree cpl. Pink (4010) (1 Side)	
1.1-4.4	07202014-002	Hanger Alu 80 Degree cpl. Pink (4010) (1 Side)	
1.1-4.4	07202015-001	Hanger Alu 70 Degree cpl. Sky Blue (319) (1 Side)	
1.1-4.4	07202015-002	Hanger Alu 80 Degree cpl. Sky Blue (319) (1 Side)	
1.1-4.4	07202016-001	Hanger Alu 70 Degree cpl. Capuccino (320) (1 Side)	
1.1-4.4	07202016-002	Hanger Alu 80 Degree cpl. Capuccino (320) (1 Side)	
1.1-4.4	07202017-001	Hanger Alu 70 Degree cpl. Kiwi (321) (1 Side)	
1.1-4.4	07202017-002	Hanger Alu 80 Degree cpl. Kiwi (321) (1 Side)	
1.1-4.4	07202018-001	Hanger Alu 70 Degree cpl. Flamingo-Glitter (322) (1 Side)	
1.1-4.4	07202018-002	Hanger Alu 80 Degree cpl. Flamingo-Glitter (322) (1 Side)	
1.1-4.4	07202019-001	Hanger Alu 70 Degree cpl. Azuri Blue 424 (1 Side)	
1.1-4.4	07202019-002	Hanger Alu 80 Degree cpl. Azuri Blue 424 (1 Side)	
1.1-4.4	072240-001	Hanger Alu 70 Degree cpl. Brillant Silver (205) (1 Side)	
1.1-4.4	072240-001	Hanger Alu 70 Degree cpl. Brillant Silver (205) (1 Side)	
1.1-4.4	072240-002	Hanger Alu 80 Degree cpl. Brillant Silver (205) (1 Side)	

Footrest Aluminum Version

Pos	Itemnumber	Description	Comment
1.1-4.4	072240-002	Hanger Alu 80 Degree cpl. Brillant Silver (205) (1 Side)	
1.1-4.4	072241-001	Hanger Alu 70 Degree cpl. Tutti Frutti Orange (2009) (1 Side)	
1.1-4.4	072241-001	Hanger Alu 70 Degree cpl. Tutti Frutti Orange (2009) (1 Side)	
1.1-4.4	072241-002	Hanger Alu 80 Degree cpl. Tutti Frutti Orange (2009) (1 Side)	
1.1-4.4	072241-002	Hanger Alu 80 Degree cpl. Tutti Frutti Orange (2009) (1 Side)	
1.1-4.4	072242-001	Hanger Alu 70 Degree cpl. Matt marine (455) (1 Side)	
1.1-4.4	072242-001	Hanger Alu 70 Degree cpl. Matt marine (455) (1 Side)	
1.1-4.4	072242-002	Hanger Alu 80 Degree cpl. Matt marine (455) (1 Side)	
1.1-4.4	072242-002	Hanger Alu 80 Degree cpl. Matt marine (455) (1 Side)	
1.1-4.4	072243-001	Hanger Alu 70 Degree cpl. Matt Red (451) (1 Side)	
1.1-4.4	072243-001	Hanger Alu 70 Degree cpl. Matt Red (451) (1 Side)	
1.1-4.4	072243-002	Hanger Alu 80 Degree cpl. Matt Red (451) (1 Side)	
1.1-4.4	072243-002	Hanger Alu 80 Degree cpl. Matt Red (451) (1 Side)	
1.1-4.4	072244-001	Hanger Alu 70 Degree cpl. Black (9005) (1 Side)	
1.1-4.4	072244-001	Hanger Alu 70 Degree cpl. Black (9005) (1 Side)	
1.1-4.4	072244-002	Hanger Alu 80 Degree cpl. Black (9005) (1 Side)	
1.1-4.4	072244-002	Hanger Alu 80 Degree cpl. Black (9005) (1 Side)	
1.1-4.4	072245-001	Hanger Alu 70 Degree cpl. White (9010) (1 Side)	
1.1-4.4	072245-001	Hanger Alu 70 Degree cpl. White (9010) (1 Side)	
1.1-4.4	072245-002	Hanger Alu 80 Degree cpl. White (9010) (1 Side)	
1.1-4.4	072245-002	Hanger Alu 80 Degree cpl. White (9010) (1 Side)	
1.1-4.4	072250-001	Hanger Alu 70 Degree cpl. Mars Red (318) (1 Side)	
1.1-4.4	072250-001	Hanger Alu 70 Degree cpl. Mars Red (318) (1 Side)	
1.1-4.4	072250-002	Hanger Alu 80 Degree cpl. Mars Red (318) (1 Side)	
1.1-4.4	072250-002	Hanger Alu 80 Degree cpl. Mars Red (318) (1 Side)	
1.1-4.4	072251-001	Hanger Alu 70 Degree cpl. Dark Chocolate Metallic (315) (1 Side)	
1.1-4.4	072251-001	Hanger Alu 70 Degree cpl. Dark Chocolate Metallic (315) (1 Side)	
1.1-4.4	072251-002	Hanger Alu 80 Degree cpl. Dark Chocolate Metallic (315) (1 Side)	
1.1-4.4	072252-001	Hanger Alu 70 Degree cpl. Brillant lime (427) (1 Side)	
1.1-4.4	072252-002	Hanger Alu 80 Degree cpl. Brillant lime (427) (1 Side)	
1.1-4.4	072253-001	Hanger Alu 70 Degree cpl. Matt-Anthracite (323) (1 Side)	
1.1-4.4	072253-002	Hanger Alu 80 Degree cpl. Matt-Anthracite (323) (1 Side)	
1.1-4.4	072254-001	Hanger Alu 70 Degree cpl. Cyan-Metallic (317) (1 Side)	
1.1-4.4	072254-002	Hanger Alu 80 Degree cpl. Cyan-Metallic (317) (1 Side)	
1.1-4.4	07202021-002	Hanger Alu 80 Degree cpl. Brilliantpurple (423) (1 Seite)	
1.1-4.4	07202020-002	Hanger Alu 80 Degree cpl. Mattpurple (454) (1 Seite)	
1.1-4.4	07202021-001	Hanger Alu 70 Degree cpl. Brilliantpurple (423) (1 Seite)	
1.1-4.4	07202020-001	Hanger Alu 70 Degree cpl. Mattpurple (454) (1 Seite)	

Footrest Plastic Version 80°

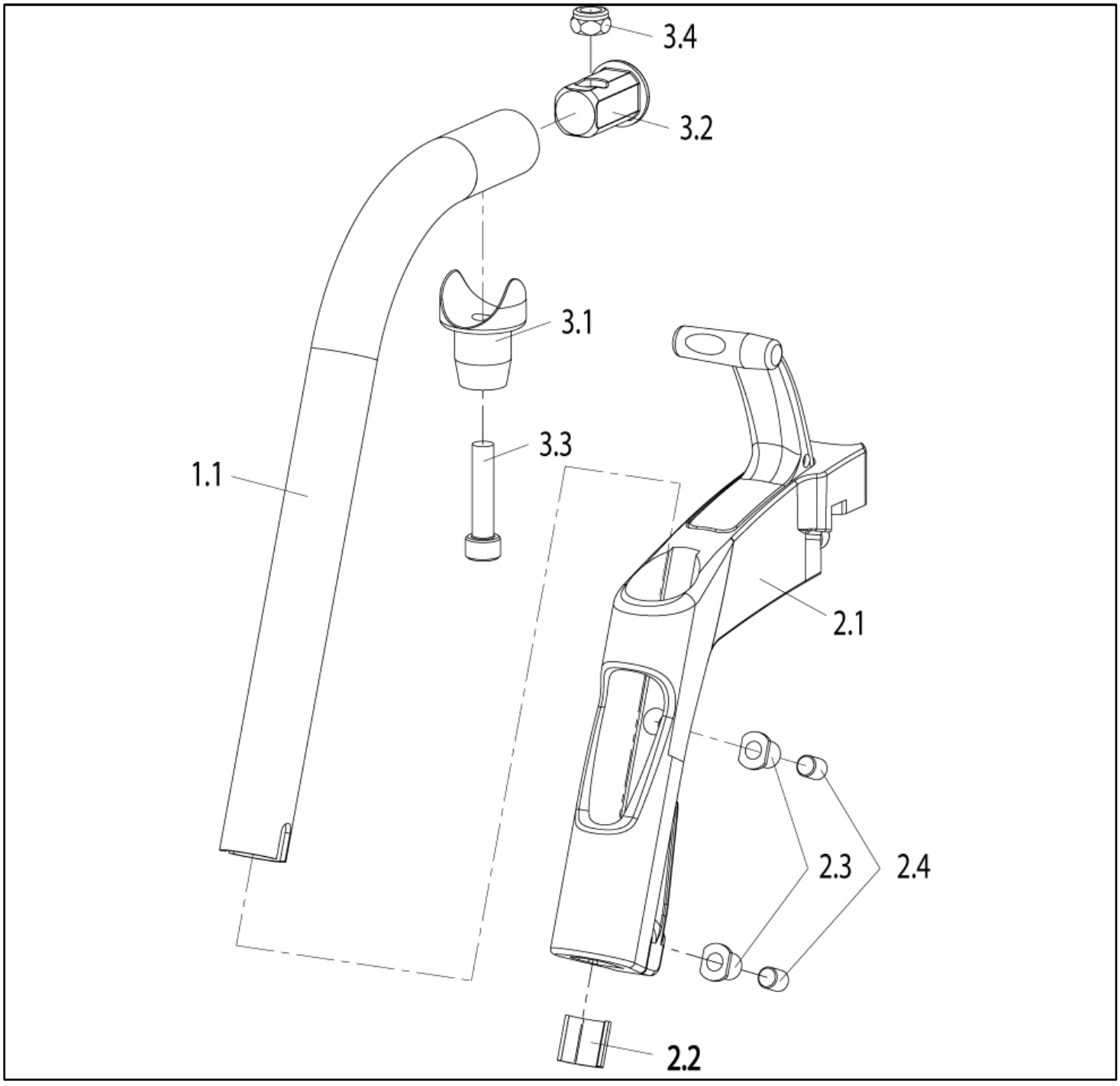

Pos	Itemnumber	Description
2.1-2.4	065205-001	Hanger Housing 80° complete right
2.1-2.4	065205-002	Hanger Housing 80° complete left
3.1-3.4	072208	Hanger Pin complete
1.1-3.4	07202119-001	Hanger Plastic 100 ° cpl. LH, Azuri Blue 424
1.1-3.4	07202105-001	Hanger Plastic 100 ° cpl. LH, blue (5005)
1.1-3.4	072292-001	Hanger Plastic 100 ° cpl. LH, Brillant Lime (427)

Pos	Itemnumber	Description
1.1-3.4	072292-001	Hanger Plastic 100 ° cpl. LH, Brillant Lime (427)
1.1-3.4	07202106-001	Hanger Plastic 100 ° cpl. LH, Brillant marine
1.1-3.4	07202108-001	Hanger Plastic 100 ° cpl. LH, Brillant red (420)
1.1-3.4	072270-001	Hanger Plastic 100 ° cpl. LH, Brillant silver (205)
1.1-3.4	072270-001	Hanger Plastic 100 ° cpl. LH, Brillant silver (205)
1.1-3.4	07202116-001	Hanger Plastic 100 ° cpl. LH, Capuccino (320)
1.1-3.4	072294-001	Hanger Plastic 100 ° cpl. LH, Cyan-Metallic (317)
1.1-3.4	072294-001	Hanger Plastic 100 ° cpl. LH, Cyan-Metallic (317)
1.1-3.4	072291-001	Hanger Plastic 100 ° cpl. LH, Dark Chocolate Metallic(315)
1.1-3.4	072291-001	Hanger Plastic 100 ° cpl. LH, Dark Chocolate Metallic(315)
1.1-3.4	07202118-001	Hanger Plastic 100 ° cpl. LH, FlamingoGlitter322
1.1-3.4	07202110-001	Hanger Plastic 100 ° cpl. LH, Graphitmetallic414
1.1-3.4	07202109-001	Hanger Plastic 100 ° cpl. LH, Silver texture (300)
1.1-3.4	07202115-001	Hanger Plastic 100 ° cpl. LH, Sky Blue (319)
1.1-3.4	07202117-001	Hanger Plastic 100 ° cpl. LH, Kiwi (321)
1.1-3.4	072290-001	Hanger Plastic 100 ° cpl. LH, Mars red (318)
1.1-3.4	072290-001	Hanger Plastic 100 ° cpl. LH, Mars red (318)
1.1-3.4	072293-001	Hanger Plastic 100 ° cpl. LH, Matt-Anthracite (323)
1.1-3.4	072293-001	Hanger Plastic 100 ° cpl. LH, Matt-Anthracite (323)
1.1-3.4	07202104-001	Hanger Plastic 100 ° cpl. LH, Matt lime (456)
1.1-3.4	072272-001	Hanger Plastic 100 ° cpl. LH, Matt marine (455)
1.1-3.4	072272-001	Hanger Plastic 100 ° cpl. LH, Matt marine (455)
1.1-3.4	072273-001	Hanger Plastic 100 ° cpl. LH, Matt red (451)
1.1-3.4	072273-001	Hanger Plastic 100 ° cpl. LH, Matt red (451)
1.1-3.4	07202112-001	Hanger Plastic 100 ° cpl. LH, Matt black(9005)
1.1-3.4	07202101-001	Hanger Plastic 100 ° cpl. LH, MattSilver (450)
1.1-3.4	07202114-001	Hanger Plastic 100 ° cpl. LH, Pink (4010)
1.1-3.4	07202111-001	Hanger Plastic 100 ° cpl. LH, Platinmetallic 314
1.1-3.4	07202107-001	Hanger Plastic 100 ° cpl. LH, Ruby red (3003)
1.1-3.4	072274-001	Hanger Plastic 100 ° cpl. LH, Black (9005)
1.1-3.4	072274-001	Hanger Plastic 100 ° cpl. LH, Black (9005)
1.1-3.4	07202113-001	Hanger Plastic 100 ° cpl. LH, Signal withe(9003)
1.1-3.4	07202102-001	Hanger Plastic 100 ° cpl. LH, Silver (475)
1.1-3.4	07202103-001	Hanger Plastic 100 ° cpl. LH, Sun Yellow 1018
1.1-3.4	072271-001	Hanger Plastic 100 ° cpl. LH, Tutti Frutti Orange (2009)
1.1-3.4	072271-001	Hanger Plastic 100 ° cpl. LH, Tutti Frutti Orange (2009)
1.1-3.4	072275-001	Hanger Plastic 100 ° cpl. LH, White (9010)
1.1-3.4	072275-001	Hanger Plastic 100 ° cpl. LH, White (9010)
1.1-3.4	07202119-002	Hanger Plastic 100 ° cpl. RH, Azuri Blue 424

Pos	Itemnumber	Description
1.1-3.4	07202105-002	Hanger Plastic 100 ° cpl. RH, blue (5005)
1.1-3.4	072292-002	Hanger Plastic 100 ° cpl. RH, Brillant Lime (427)
1.1-3.4	072292-002	Hanger Plastic 100 ° cpl. RH, Brillant Lime (427)
1.1-3.4	07202106-002	Hanger Plastic 100 ° cpl. RH, Brillant marine
1.1-3.4	07202108-002	Hanger Plastic 100 ° cpl. RH, Brillant red(420)
1.1-3.4	072270-002	Hanger Plastic 100 ° cpl. RH, Brillant silver (205)
1.1-3.4	072270-002	Hanger Plastic 100 ° cpl. RH, Brillant silver (205)
1.1-3.4	07202116-002	Hanger Plastic 100 ° cpl. RH, Capuccino (320)
1.1-3.4	072294-002	Hanger Plastic 100 ° cpl. RH, Cyan-Metallic (317)
1.1-3.4	072294-002	Hanger Plastic 100 ° cpl. RH, Cyan-Metallic (317)
1.1-3.4	072291-002	Hanger Plastic 100 ° cpl. RH, Dark Chocolate Metallic (315)
1.1-3.4	072291-002	Hanger Plastic 100 ° cpl. RH, Dark Chocolate Metallic (315)
1.1-3.4	07202118-002	Hanger Plastic 100 ° cpl. RH, FlamingoGlitter322
1.1-3.4	07202110-002	Hanger Plastic 100 ° cpl. RH, Graphitmetallic414
1.1-3.4	07202109-002	Hanger Plastic 100 ° cpl. RH, Silver texture(300)
1.1-3.4	07202115-002	Hanger Plastic 100 ° cpl. RH, Sky Blue (319)
1.1-3.4	07202117-002	Hanger Plastic 100 ° cpl. RH, Kiwi (321)
1.1-3.4	072290-002	Hanger Plastic 100 ° cpl. RH, Mars red (318)
1.1-3.4	072290-002	Hanger Plastic 100 ° cpl. RH, Mars red (318)
1.1-3.4	072293-002	Hanger Plastic 100 ° cpl. RH, Matt-Anthracite (323)
1.1-3.4	072293-002	Hanger Plastic 100 ° cpl. RH, Matt-Anthracite (323)
1.1-3.4	07202104-002	Hanger Plastic 100 ° cpl. RH, Matt lime (456)
1.1-3.4	07202112-002	Hanger Plastic 100 ° cpl. RH, Matt black(9005)
1.1-3.4	07202101-002	Hanger Plastic 100 ° cpl. RH, MattSilver (450)
1.1-3.4	07202114-002	Hanger Plastic 100 ° cpl. RH, Pink (4010)
1.1-3.4	07202111-002	Hanger Plastic 100 ° cpl. RH, Platinmetallic 314
1.1-3.4	07202107-002	Hanger Plastic 100 ° cpl. RH, Ruby red (3003)
1.1-3.4	072274-002	Hanger Plastic 100 ° cpl. RH, Black (9005)
1.1-3.4	072274-002	Hanger Plastic 100 ° cpl. RH, Black (9005)
1.1-3.4	07202113-002	Hanger Plastic 100 ° cpl. RH, Signal withe(9003)
1.1-3.4	07202102-002	Hanger Plastic 100 ° cpl. RH, Silver (475)
1.1-3.4	07202103-002	Hanger Plastic 100 ° cpl. RH, Sun Yellow 1018
1.1-3.4	072275-002	Hanger Plastic 100 ° cpl. RH, White (9010)
1.1-3.4	072275-002	Hanger Plastic 100 ° cpl. RH, White (9010)
1.1-3.4	072272-002	Hanger Plastic 100 ° cpl. RH, Matt marine (455)
1.1-3.4	072272-002	Hanger Plastic 100 ° cpl. RH, Matt marine (455)
1.1-3.4	072273-002	Hanger Plastic 100 ° cpl. RH, Matt red (451)
1.1-3.4	072273-002	Hanger Plastic 100 ° cpl. RH, Matt red (451)
1.1-3.4	072271-002	Hanger Plastic 100 ° cpl. RH, Tutti Frutti Orange (2009)

Pos	Itemnumber	Description
1.1-3.4	072271-002	Hanger Plastic 100 ° cpl. RH, Tutti Frutti Orange (2009)
1.1-3.4	07202120-001	Hanger Plastic 100 ° cpl. LH, Mattpurple(454)
1.1-3.4	07202120-002	Hanger Plasic 100 ° cpl. RH, Mattpurple(454)
1.1-3.4	07202121-001	Hanger Plasic 100 ° cpl. LH Brilliantpurple (423)
1.1-3.4	07202121-002	Hanger Plasic 100 ° cpl. RH, Brilliantpurple (423)

Footrest Plastic Version 70°

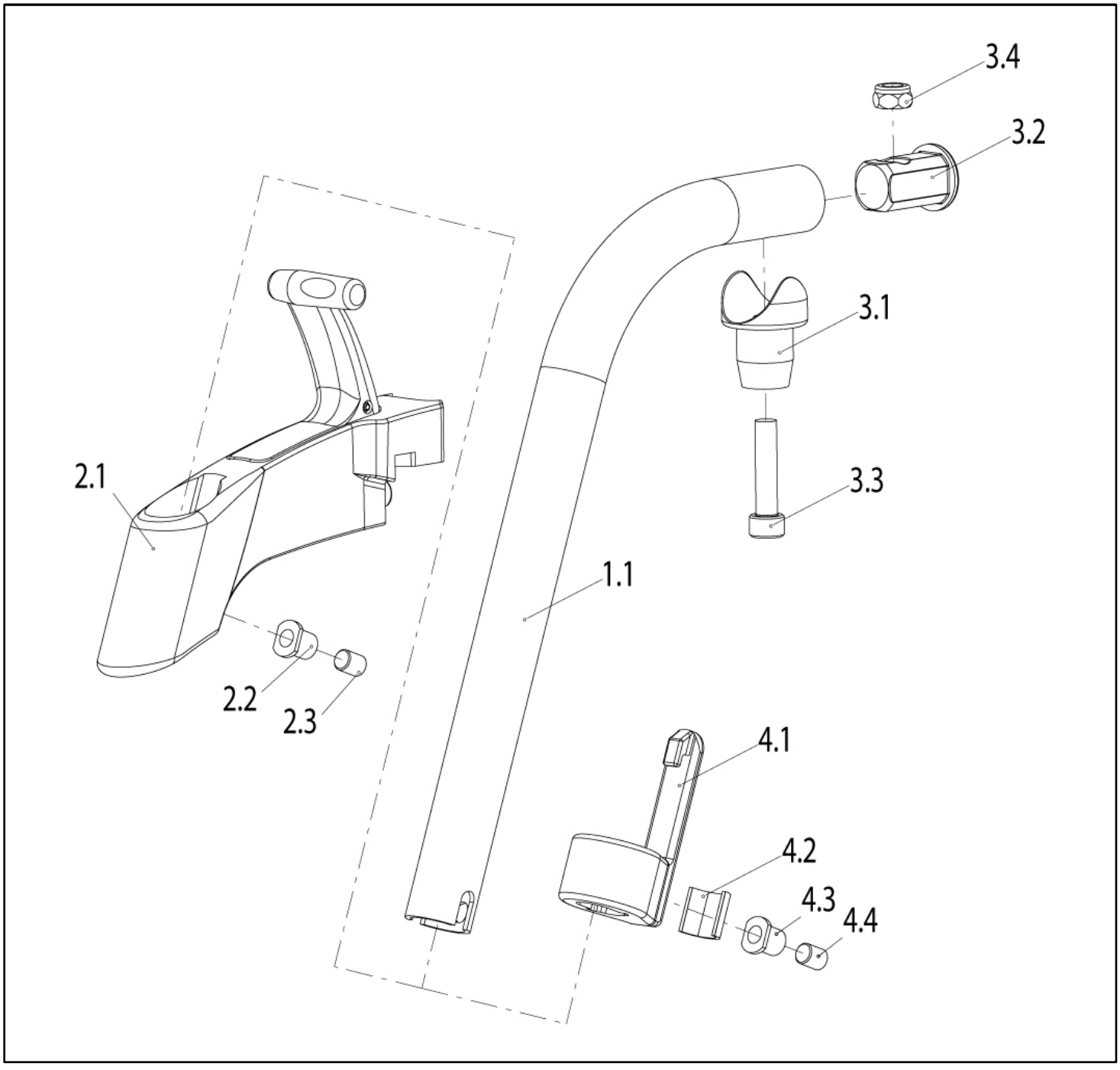

Pos	Itemnumber	Description
2.1-2.3	067929-001	Hanger Housing 70° complete left
2.1-2.3	067929-002	Hanger Housing 70° complete right
3.1-3.4	072208	Hanger Pin complete
4.1-4.4	76705023	Calf strap Bracket with Footrestclamp complete (1Side)
1.1-3.4	07202219-001	Hanger Plastic 110 ° cpl. LH, Azuri Blue 424
1.1-3.4	07202205-001	Hanger Plastic 110 ° cpl. LH, blue (5005)

Pos	Itemnumber	Description
1.1-3.4	072282-001	Hanger Plastic 110 ° cpl. LH, Brillant Lime (427)
1.1-3.4	07202206-001	Hanger Plastic 110 ° cpl. LH, Brillant marine
1.1-3.4	07202208-001	Hanger Plastic 110 ° cpl. LH, Brillant red(420)
1.1-3.4	072260-001	Hanger Plastic 110 ° cpl. LH, Brillant silver (205)
1.1-3.4	07202216-001	Hanger Plastic 110 ° cpl. LH, Capuccino (320)
1.1-3.4	072284-001	Hanger Plastic 110 ° cpl. LH, Cyan-Metallic (317)
1.1-3.4	072281-001	Hanger Plastic 110 ° cpl. LH, Dark Chocolate Metallic(315)
1.1-3.4	07202218-001	Hanger Plastic 110 ° cpl. LH, FlamingoGlitter322
1.1-3.4	07202210-001	Hanger Plastic 110 ° cpl. LH, Graphitmetallic414
1.1-3.4	07202209-001	Hanger Plastic 110 ° cpl. LH, Silver texture(300)
1.1-3.4	07202215-001	Hanger Plastic 110 ° cpl. LH, Sky Blue (319)
1.1-3.4	07202217-001	Hanger Plastic 110 ° cpl. LH, Kiwi (321)
1.1-3.4	072280-001	Hanger Plastic 110 ° cpl. LH, Mars red (318)
1.1-3.4	072283-001	Hanger Plastic 110 ° cpl. LH, Matt-Anthracite (323)
1.1-3.4	07202204-001	Hanger Plastic 110 ° cpl. LH, Matt lime (456)
1.1-3.4	072262-001	Hanger Plastic 110 ° cpl. LH, Matt marine (455)
1.1-3.4	072263-001	Hanger Plastic 110 ° cpl. LH, Matt red (451)
1.1-3.4	07202212-001	Hanger Plastic 110 ° cpl. LH, Matt black(9005)
1.1-3.4	07202201-001	Hanger Plastic 110 ° cpl. LH, MattSilver (450)
1.1-3.4	07202214-001	Hanger Plastic 110 ° cpl. LH, Pink (4010)
1.1-3.4	07202211-001	Hanger Plastic 110 ° cpl. LH, Platinmetallic 314
1.1-3.4	07202207-001	Hanger Plastic 110 ° cpl. LH, Ruby red (3003)
1.1-3.4	072264-001	Hanger Plastic 110 ° cpl. LH, Black (9005)
1.1-3.4	07202213-001	Hanger Plastic 110 ° cpl. LH, Signal withe(9003)
1.1-3.4	07202202-001	Hanger Plastic 110 ° cpl. LH, Silver (475)
1.1-3.4	07202203-001	Hanger Plastic 110 ° cpl. LH, Sun Yellow 1018
1.1-3.4	072261-001	Hanger Plastic 110 ° cpl. LH, Tutti Frutti Orange (2009)
1.1-3.4	072265-001	Hanger Plastic 110 ° cpl. LH, White (9010)
1.1-3.4	07202219-002	Hanger Plastic 110 ° cpl. RH, Azuri Blue 424
1.1-3.4	07202205-002	Hanger Plastic 110 ° cpl. RH, blue (5005)
1.1-3.4	072282-002	Hanger Plastic 110 ° cpl. RH, Brillant Lime (427)
1.1-3.4	07202206-002	Hanger Plastic 110 ° cpl. RH, Brillant marine
1.1-3.4	07202208-002	Hanger Plastic 110 ° cpl. RH, Brillant red(420)
1.1-3.4	072260-002	Hanger Plastic 110 ° cpl. RH, Brillant silver (205)
1.1-3.4	07202216-002	Hanger Plastic 110 ° cpl. RH, Capuccino (320)
1.1-3.4	072284-002	Hanger Plastic 110 ° cpl. RH, Cyan-Metallic (317)
1.1-3.4	072281-002	Hanger Plastic 110 ° cpl. RH, Dark Chocolate Metallic(315)
1.1-3.4	07202218-002	Hanger Plastic 110 ° cpl. RH, FlamingoGlitter322
1.1-3.4	07202210-002	Hanger Plastic 110 ° cpl. RH, Graphitmetallic414

Pos	Itemnumber	Description
1.1-3.4	07202209-002	Hanger Plastic 110 ° cpl. RH, Silver texture(300)
1.1-3.4	07202215-002	Hanger Plastic 110 ° cpl. RH, Sky Blue (319)
1.1-3.4	07202217-002	Hanger Plastic 110 ° cpl. RH, Kiwi (321)
1.1-3.4	072280-002	Hanger Plastic 110 ° cpl. RH, Mars red (318)
1.1-3.4	072283-002	Hanger Plastic 110 ° cpl. RH, Matt-Anthracite (323)
1.1-3.4	07202204-002	Hanger Plastic 110 ° cpl. RH, Matt lime (456)
1.1-34.	072262-002	Hanger Plastic 110 ° cpl. RH, Matt marine (455)
1.1-3.4	072263-002	Hanger Plastic 110 ° cpl. RH, Matt red (451)
1.1-3.4	07202212-002	Hanger Plastic 110 ° cpl. RH, Matt black(9005)
1.1-3.4	07202201-002	Hanger Plastic 110 ° cpl. RH, MattSilver (450)
1.1-3.4	07202214-002	Hanger Plastic 110 ° cpl. RH, Pink (4010)
1.1-3.4	07202211-002	Hanger Plastic 110 ° cpl. RH, Platinmetallic 314
1.1-3.4	07202207-002	Hanger Plastic 110 ° cpl. RH, Ruby red (3003)
1.1-3.4	072264-002	Hanger Plastic 110 ° cpl. RH, Black (9005)
1.1-3.4	07202213-002	Hanger Plastic 110 ° cpl. RH, Signal withe(9003)
1.1-3.4	07202202-002	Hanger Plastic 110 ° cpl. RH, Silver (475)
1.1-3.4	07202203-002	Hanger Plastic 110 ° cpl. RH, Sun Yellow 1018
1.1-3.4	072261-002	Hanger Plastic 110 ° cpl. RH, Tutti Frutti Orange (2009)
1.1-3.4	072265-002	Hanger Plastic 110 ° cpl. RH, White (9010)
1.1-3.4	07202221-002	Hanger Plastic 110 ° cpl. RH, Brilliantpurple (423)
1.1-3.4	07202220-002	Hanger Plastic 110 ° cpl. RH, Mattpurple (454)
1.1-3.4	07202221-001	Hanger Plastic 110 ° cpl. LH, Brilliantpurple (423)
1.1-3.4	07202220-001	Hanger Plastic 110 ° cpl. LH, Mattpurple (454)

Elevating legrest (ELR) Lower Leg Length 30-34 cm

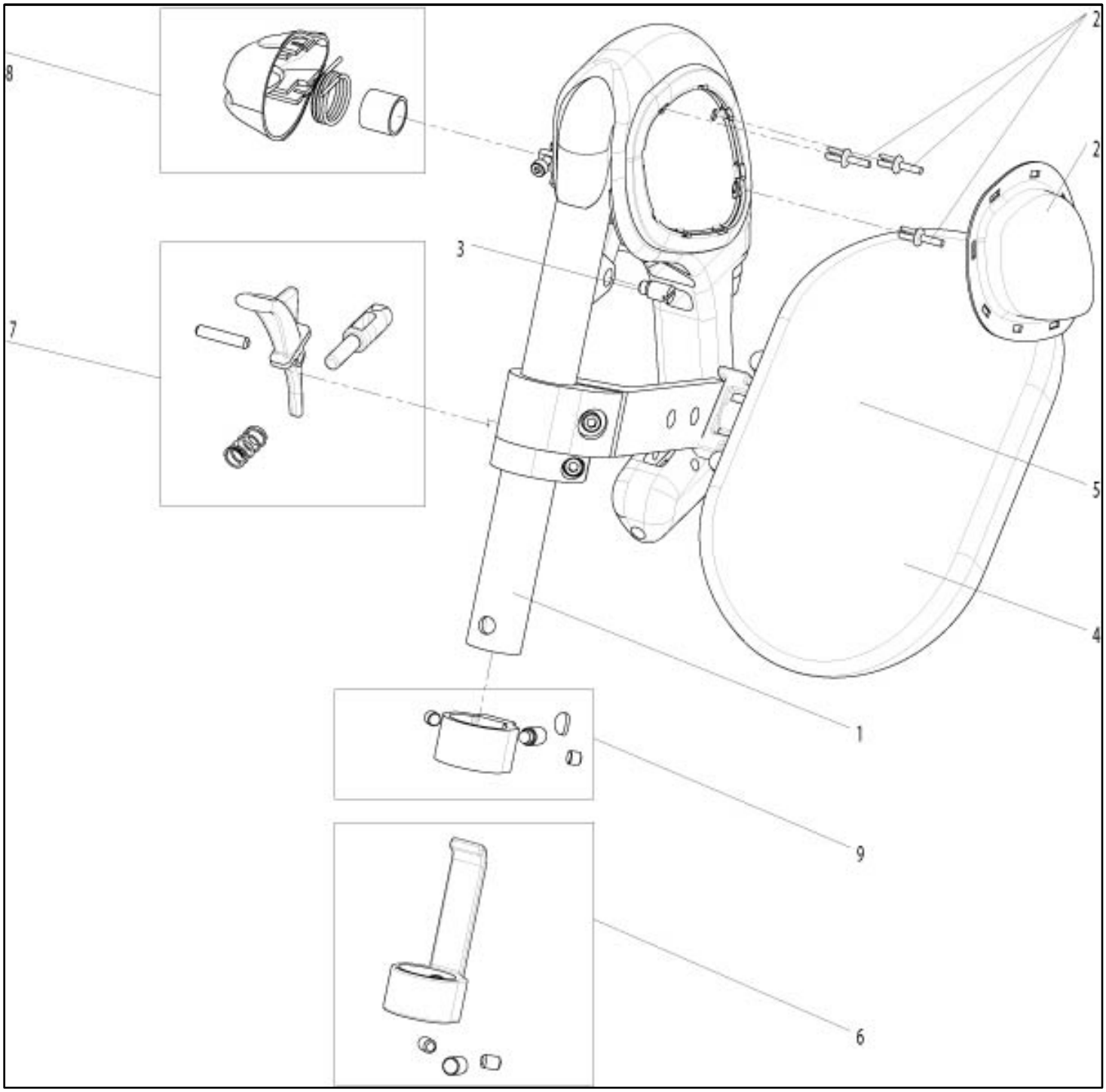

Pos	Itemnumber	Description	Comment
1-8	82005040-001	Elevating legrest (w/o footboard)	left
1-8	82005040-002	Elevating legrest (w/o footboard)	right
1-8	82005040-000	Elevating legrest (w/o footboard)	pair
2	064766-000-ET	Knee pad	pair
3	064855-ET	Headless screw	10 pcs./pack

Pos	Itemnumber	Description	Comment
4-5	064924	Calf pad with cover	
5	064927	Calf pad cover	
6	069942	Clamp used with footrest (incl. mounting accessories)	pair
7	069940	Release lever cpl.	
8	069941	Release mechanism	
1-7,9	84605001-000	Elevating legrest (w/o footboard)	left
1-7,9	84605001-001	Elevating legrest (w/o footboard)	right
1-7,9	84605001-002	Elevating legrest (w/o footboard)	pair

Elevating Leg Rest (ELR) > Lower Leg Length 34 cm

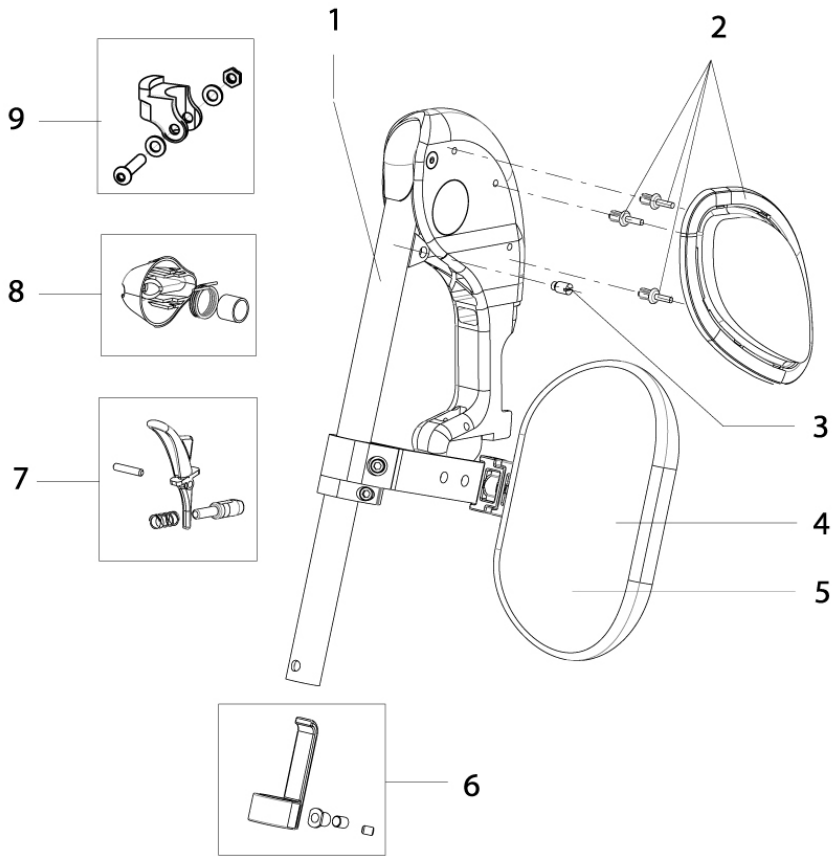

Pos	Itemnumber	Description	Comment
-	072230	ELR-Footrest (w/o footplate)	Pair
-	072231	ELR-Footrest (w/o footplate)	LH, note: due to a production change one must order for wheelchairs manufactured prior 2012-03-20 a pair of ELR
1 - 9	072232	ELR-Footrest (w/o footplate)	RH, note: due to a production change one must order for wheelchairs manufactured prior 2012-03-20 a pair of ELR

Pos	Itemnumber	Description	Comment
2	064766-000-ET	Knee pad	Pair
3	064855-ET	Headless screw	10 pcs./pack
4 - 5	064924	Calf pad with cover	
4	064927	Calf pad cover	
6	069942	Clamp used with footrest (incl. mounting accessories)	Pair
7	069940	Release lever cpl.	
8	069941	Release mechanism	
9	072126	Mounting accessories used with ELR	LH/RH useable

Stump Pad

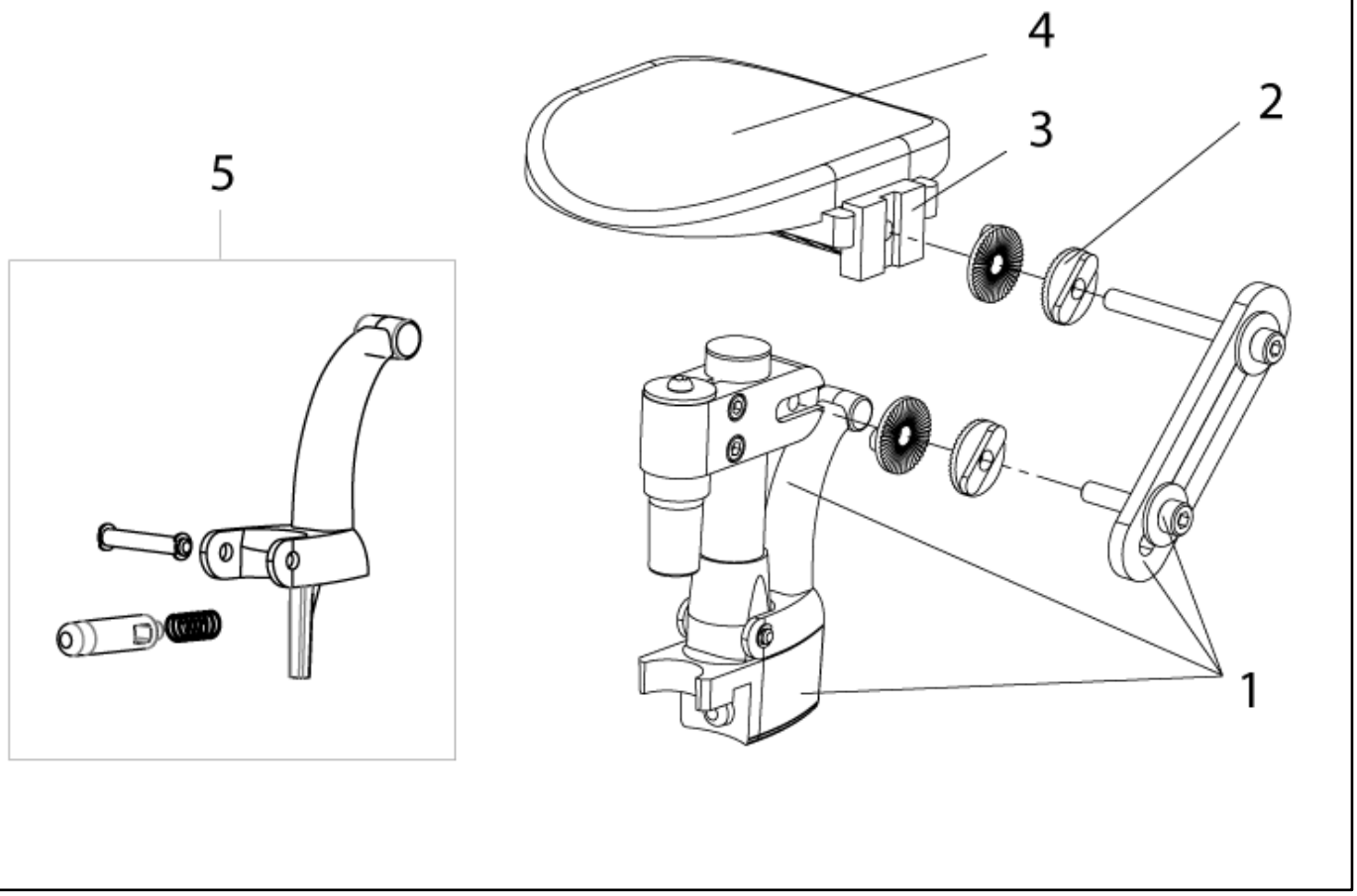

Pos	Itemnumber	Description	Comment
-	064280-000	Stump pad cpl.	Pair
-	064280-002	Stump pad cpl.	LH
1 - 4	064280-001	Stump pad cpl.	RH
2	064905	Detent washer set	20 pcs./pack
3 - 4	064924	Calf pad with cover	
4	064927	Calf pad cover	
5	064999-ET	Release lever cpl.	10 pcs/pack

Plastic Footplate

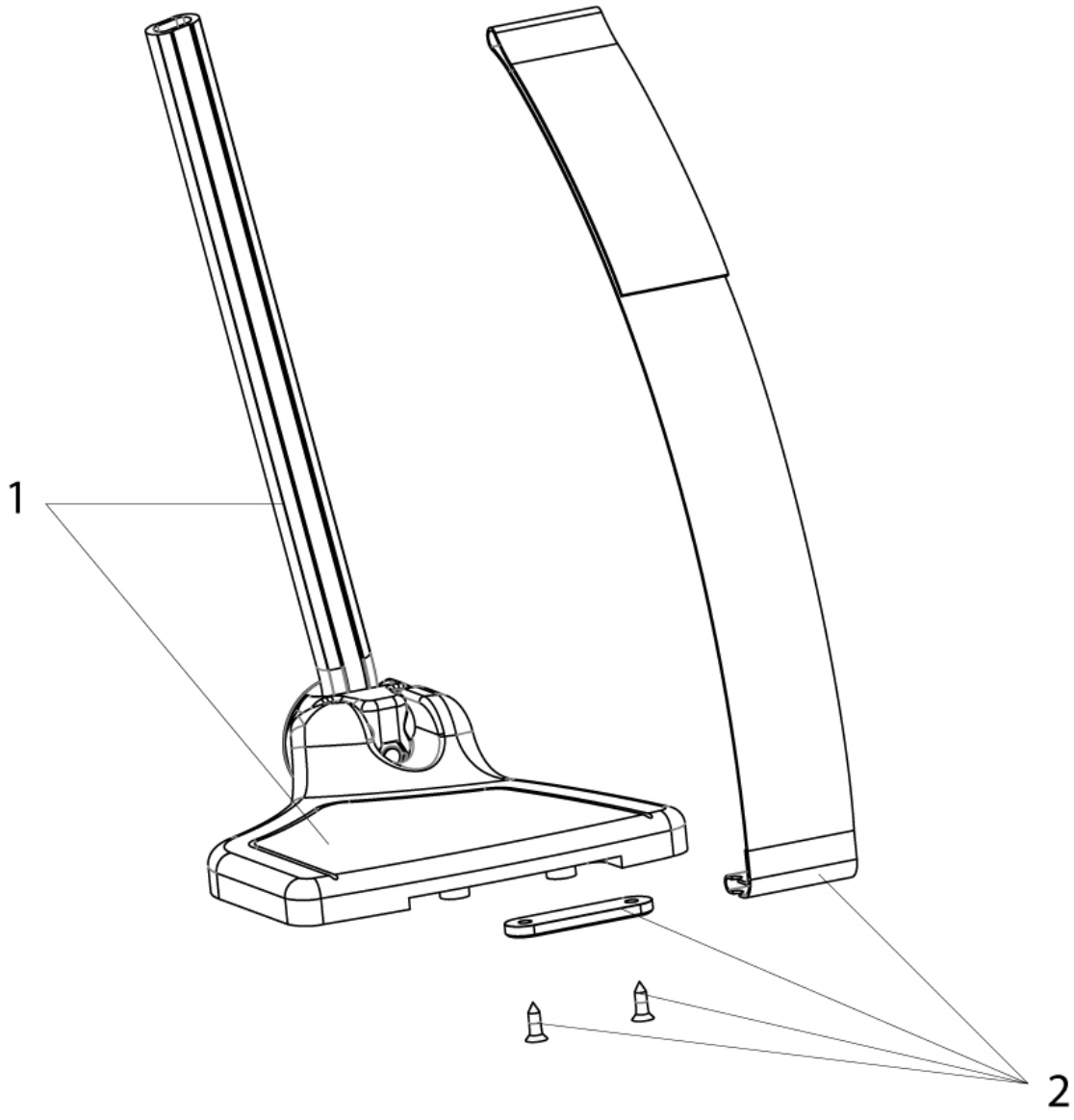

Pos	Itemnumber	Description	Comment
-	064871-101	Plastic footplate 157 mm (with heel band & extention tube - SW 38 - 40.5 cm)	Pair
-	064871-011	Plastic footplate 157 mm (with heel band & extention tube - SW 38 - 40.5 cm)	LH
1 - 2	064871-021	Plastic footplate 157 mm (with heel band & extention tube - SW 38 - 40.5 cm)	RH
-	064871-102	Plastic footplate 182 mm (with heel band & extention tube - SW 43 - 45.5 cm)	Pair

Plastic Footplate

Pos	Itemnumber	Description	Comment
-	064871-012	Plastic footplate 182 mm (with heel band & extention tube - SW 43 - 45.5 cm)	LH
1 - 2	064200-122	Plastic footplate 182 mm (with heel band & extention tube - SW 43 - 45.5 cm)	RH
-	064871-103	Plastic footplate 207 mm (with heel band & extention tube - SW 48 - 60 cm)	Pair
-	064871-013	Plastic footplate 207 mm (with heel band & extention tube - SW 48 - 60 cm)	LH
1 - 2	064200-123	Plastic footplate 207 mm (with heel band & extention tube - SW 48 - 60 cm)	RH
2	064914	Heel loop cpl.	

Divided footplate, angle and depth adj., aluminium

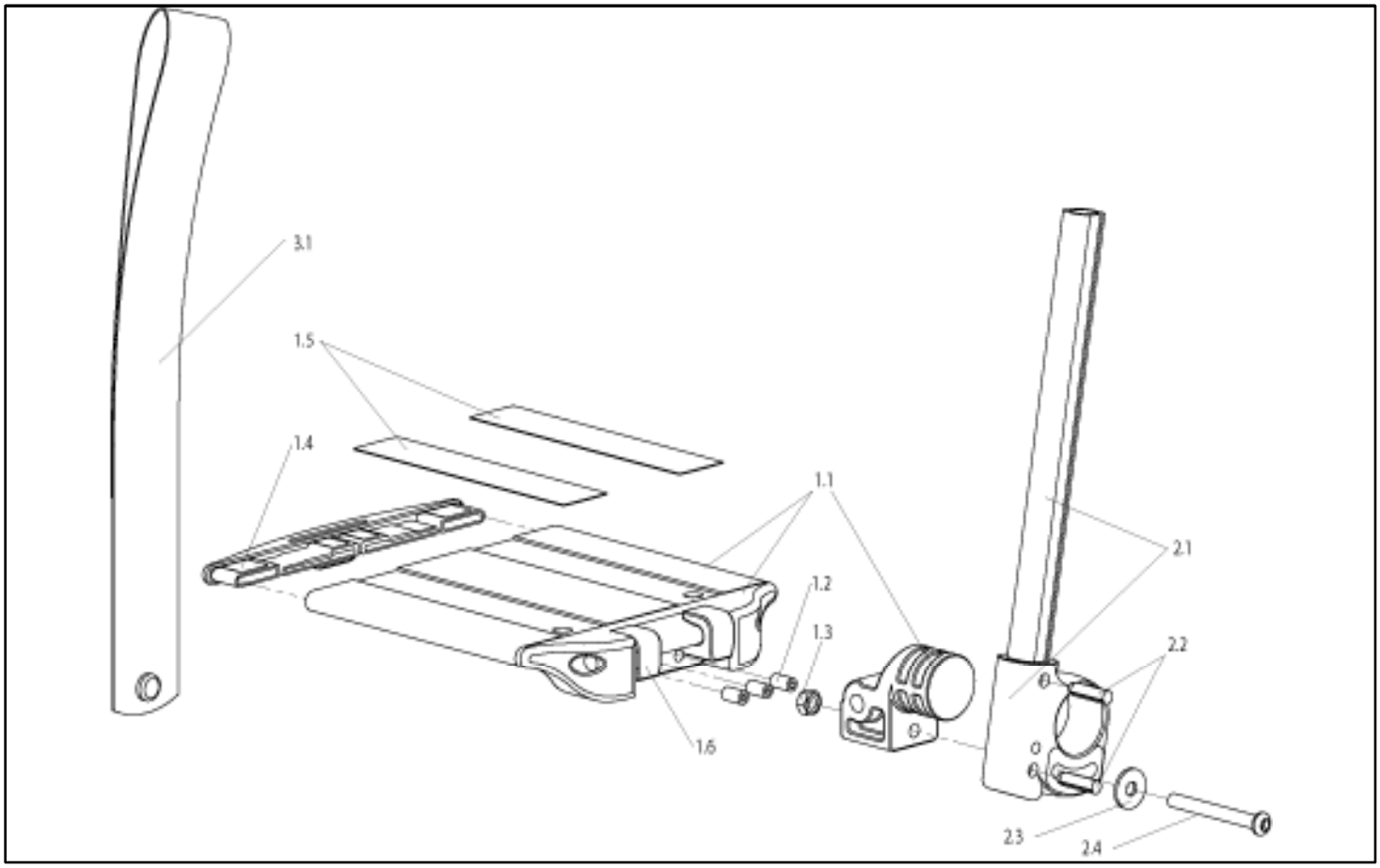

Pos	Itemnumber	Description	Comment
1.1-3.1	762920110	Divided footrest with metal footplate and calf strap, complete, angle-adjustable	Pair
1.1-3.1	762820110	Divided footrest with metal footplate and calf strap, complete, angle-adjustable	RH
1.1-3.1	762720110	Divided footrest with metal footplate and calf strap, complete, angle-adjustable	LH
1.1-1.5	760824150	Divided Footboard without tube	
1.2	000105003-ET	Stud bolt M 6 x 12 DIN 916	Pack of 12
1.3	000128007-ET	Hex nut M 6 DIN 985	Pack of 25
1.4	054212	Tube Cap	
1.5	000821167	Slip resistant coating (only available by the meter. Please indicate quantity)	per meter
1.6	760824032-ET	Clamp for footboard adjustment	Pack of 12
2.1-2.4	054200-312	Footrest tube with receiver cpl.	can be used right & left
2.2	000154012-ET	Pin 6 x 22 DIN 1473	Pack of 10
2.3	000130121-ET	Washer A 6,4 DIN 7349	Pack of 25
2.4	000102314.01-ET	Oval-head screw M 6 x 55 with Torx drive	Pack of 25

Divided footplate, angle and depth adj., aluminium

Pos	Itemnumber	Description	Comment
3.1	760824031	Calf strap	can be used right & left

Divided Footrest, metal

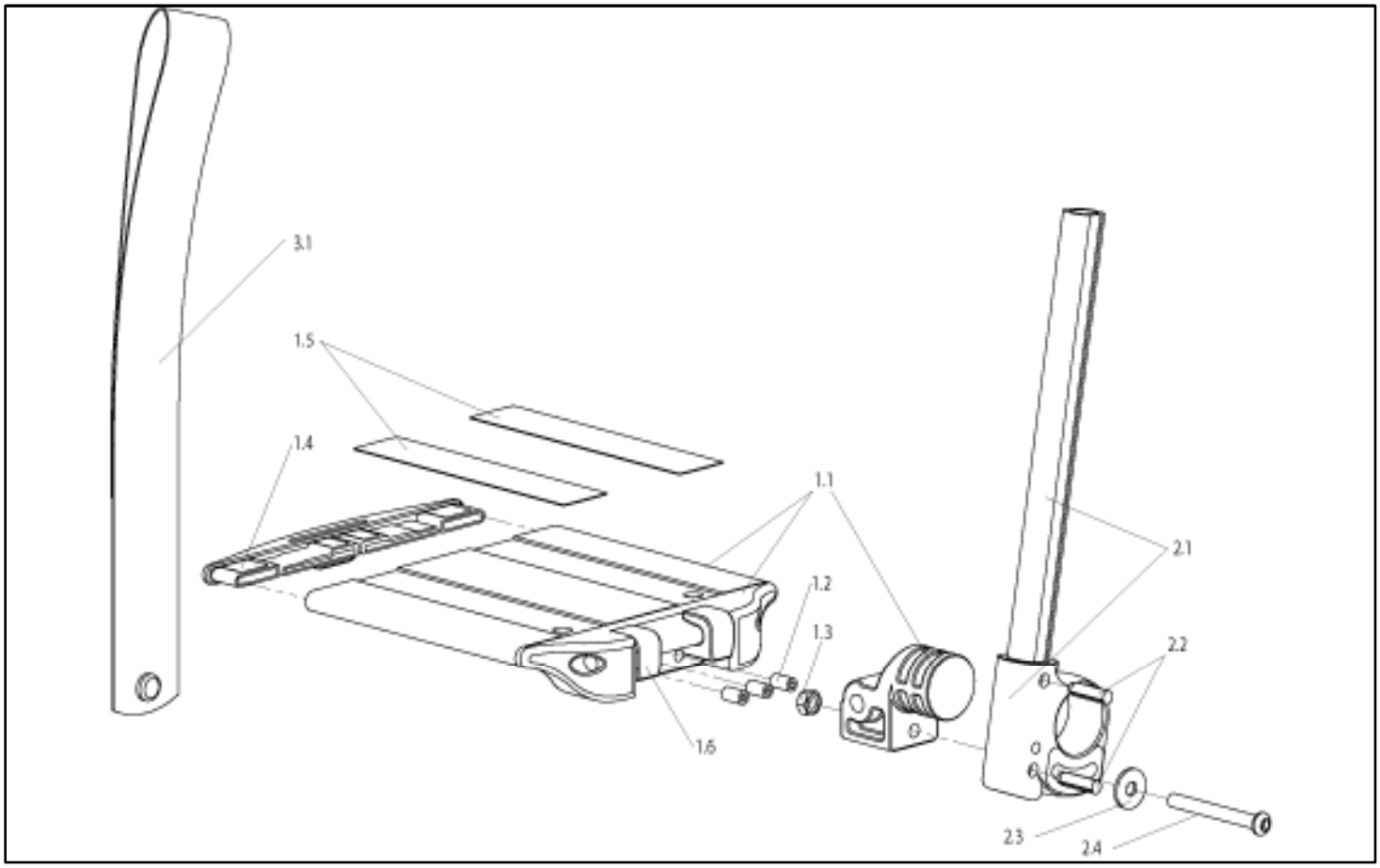

Pos	Itemnumber	Description	Comment
1.1-3.1	762920110	Divided footrest with metal footplate and calf strap, complete, angle-adjustable	Pair
1.1-3.1	762820110	Divided footrest with metal footplate and calf strap, complete, angle-adjustable	RH
1.1-3.1	762720110	Divided footrest with metal footplate and calf strap, complete, angle-adjustable	LH
1.1-1.5	760824150	Divided Footboard without tube	
1.2	000105003-ET	Stud bolt M 6 x 12 DIN 916	Pack of 12
1.3	000128007-ET	Hex nut M 6 DIN 985	Pack of 25
1.4	054212	Tube Cap	
1.5	000821167	Slip resistant coating (only available by the meter. Please indicate quantity)	per meter
1.6	760824032-ET	Clamp for footboard adjustment	Pack of 12
2.1-2.4	054200-312	Footrest tube with receiver cpl.	can be used right & left
2.2	000154012-ET	Pin 6 x 22 DIN 1473	Pack of 10
2.3	000130121-ET	Washer A 6,4 DIN 7349	Pack of 25
2.4	000102314.01-ET	Oval-head screw M 6 x 55 with Torx drive	Pack of 25

Divided Footrest, metal

Pos	Itemnumber	Description	Comment
3.1	760824031	Calf strap	can be used right & left

Divided footboard, metal, for short LLL

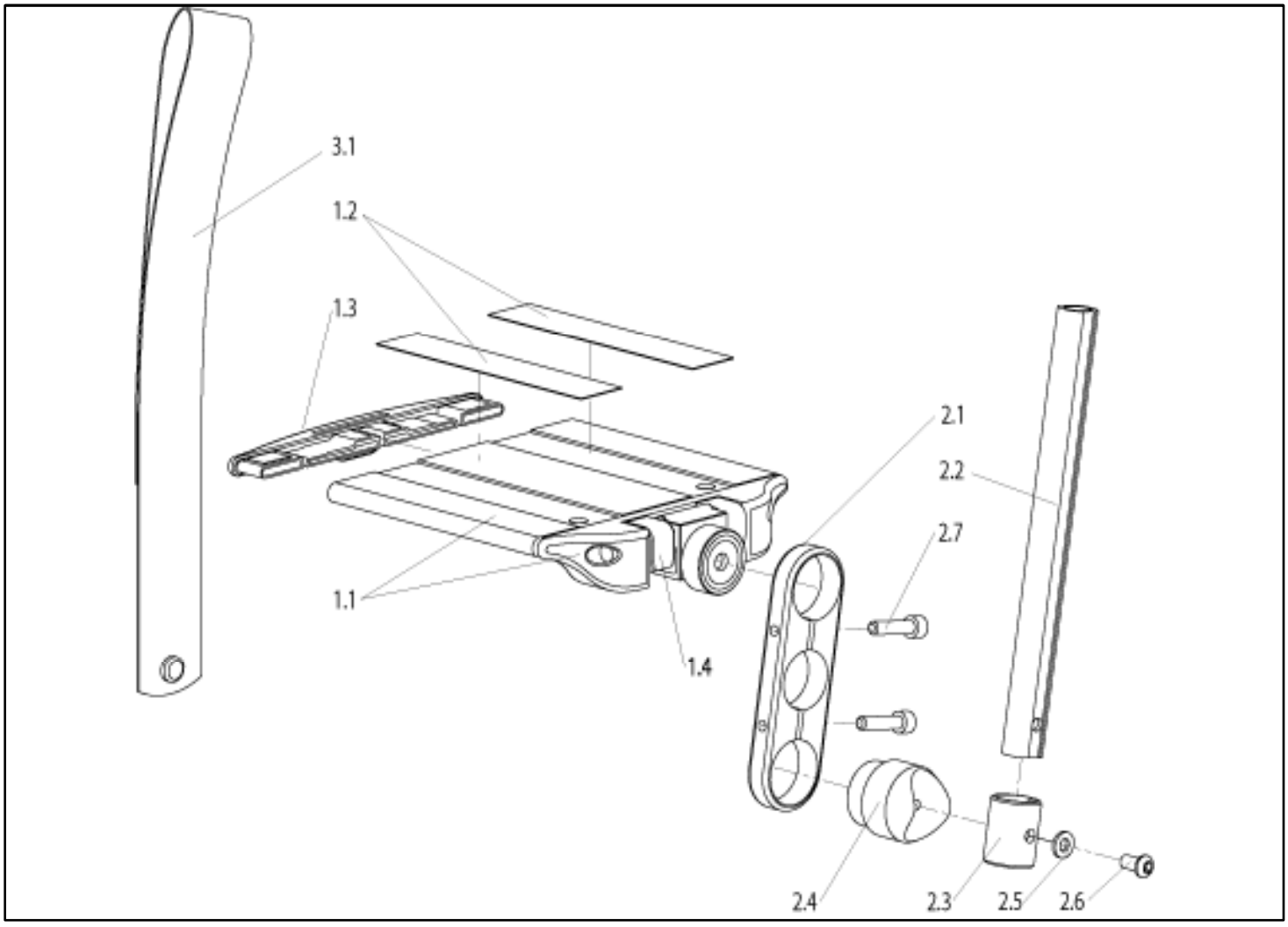

Pos	Itemnumber	Description	Comment
1.1-3.1	762 920 210	Divided footboards for short LLL cpl.	Pair
1.1, 3.1	762 820 210	Divided footboard for short LLL cpl.	RH
1.1, 3.1	762 720 210	Divided footboard for short LLL cpl.	LH
1.2	000 821 167	Slip resistant coating (Only available by the metre. Please indicate quantity)	
1.3	054212	End plug	
1.4	760 824 032-ET	Clamp for footrest adjustment	Pack of 12
2.1-2.7	054200-313	Footrest bracket for short LLL	LH & RH suitable
2.5	000 130 107-ET	Washer A 6.4 DIN 125	Pack of 25
2.6	000 102 317.01-ET	Button head cap screw M 6 x 37 Torx drive	Pack of 25
2.7	000 102 006-ET	Cyl head screw M 6 x 25 DIN 912	Pack of 25
3.1	760 824 031	Heelloop for divided footplate	
1.1-1.3	762 820 209-005	Divided footplate for short LLL SW: 36	LH & RH suitable

Divided footboard, metal, for short LLL

Pos	Itemnumber	Description	Comment
1.1-1.3	762 820 209-001	Divided footplate for short LLL SW: 38-40	LH & RH suitable
1.1-1.3	762 820 209-002	Divided footplate for short LLL SW: 42-44	LH & RH suitable
1.1-1.3	762 820 209-003	Divided footplate for short LLL SW: 46	LH & RH suitable
1.1-1.3	762 820 209-004	Divided footplate for short LLL SW: 54	LH & RH suitable

Continous Footboard metal

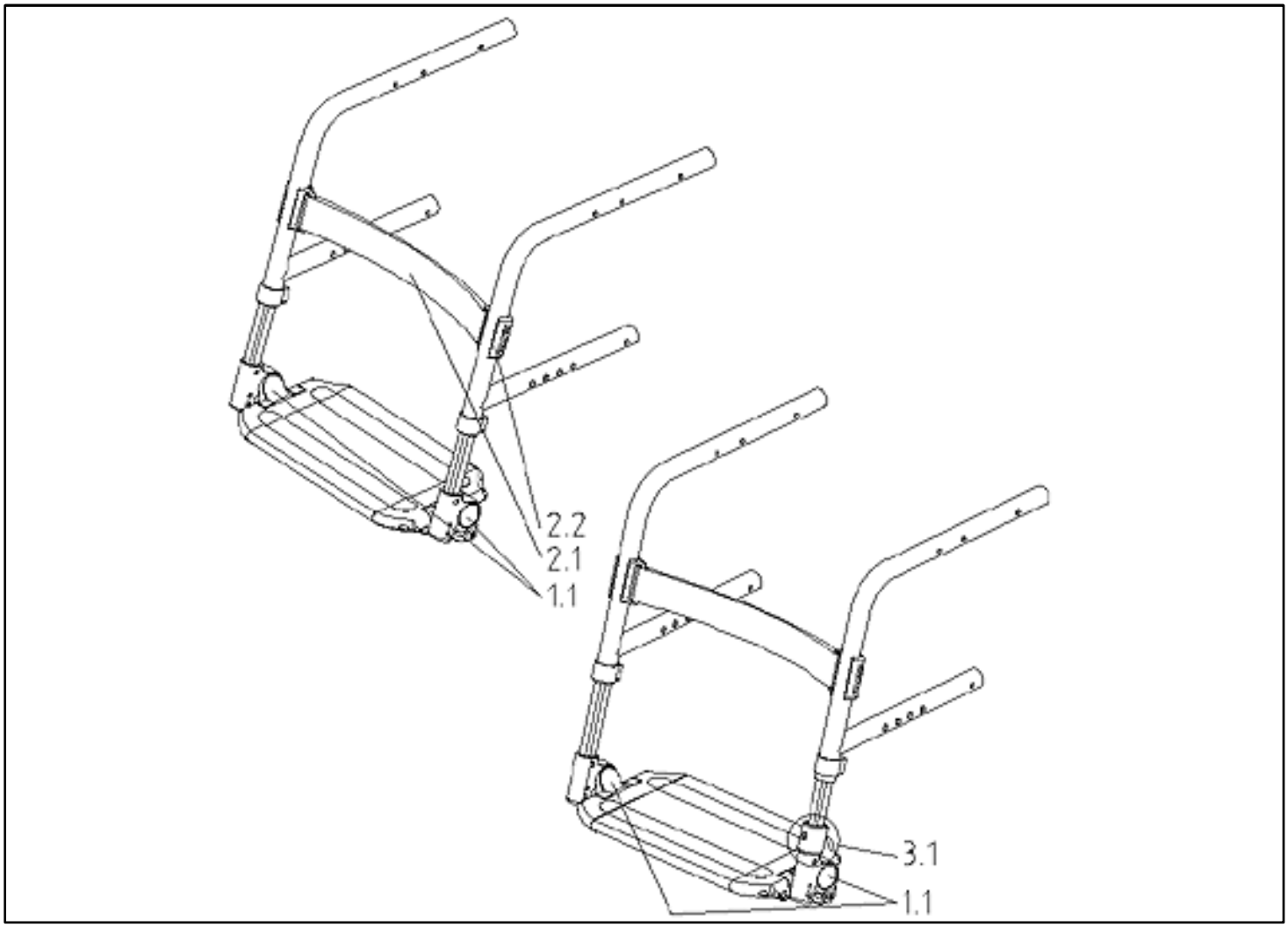

Pos	Itemnumber	Description	Comment
2.1-2.2	762813003	Calf strap SW: 34 - SW: 36 complete	Pc for use on left and right side
2.1-2.2	762813005	Calf strap SW: 38 - SW: 50 complete, can be used on right and left side	rh & lh usable
2.1	000813003	Calf strap for SW: 34 - 36	
2.1	000813005	Calf strap for SW: 38 - 50	
2.2	760812011-ET	Calf strap bracket	Pack of 6
	000068506-ET	Adhesive tape used with calf strap bracket	10 pcs./pack

Continuous footboard, metal, for short LLL

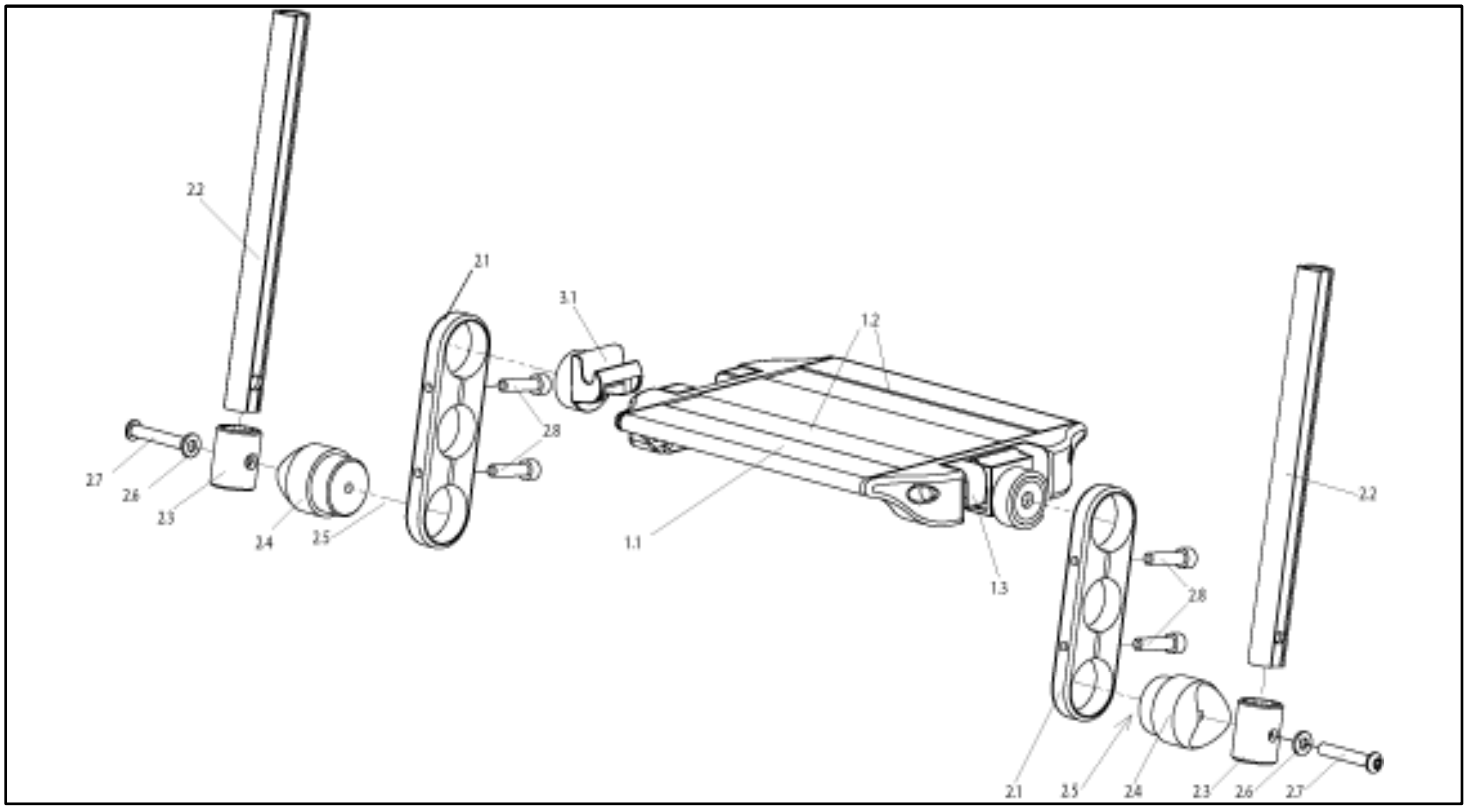

Pos	Itemnumber	Description	Comment
1.1-3.1	762 820 310	Single footplate complete short LLL cpl.	
1.1-1.3	762 824 148	Single footplate complete short LLL	
1.2	000 821 167	Slip resistant coating	per meter
1.3	760 824 032-ET	Clamp for footboard adjustment	Pack of 12
2.1-2.8	054200-313	Continuous footboard bracket for short LLL	
2.5	611 812 016-ET	Sleeve nut M6 x 12 x 8.5	
2.6	000 130 107-ET	Washer A 6.4, DIN 125	
2.7	000 102 317.01-ET	Lens head screw M6 x 37, Trx	
2.8	000 102 006-ET	Cylindrical head socket screw M 6 x 25, DIN 912	
3.1	840 824 006-ET	Support for footboard	

Footrest, continuous, angle and depth adjustable, folding upwards, plastic /carbon/ aluminium

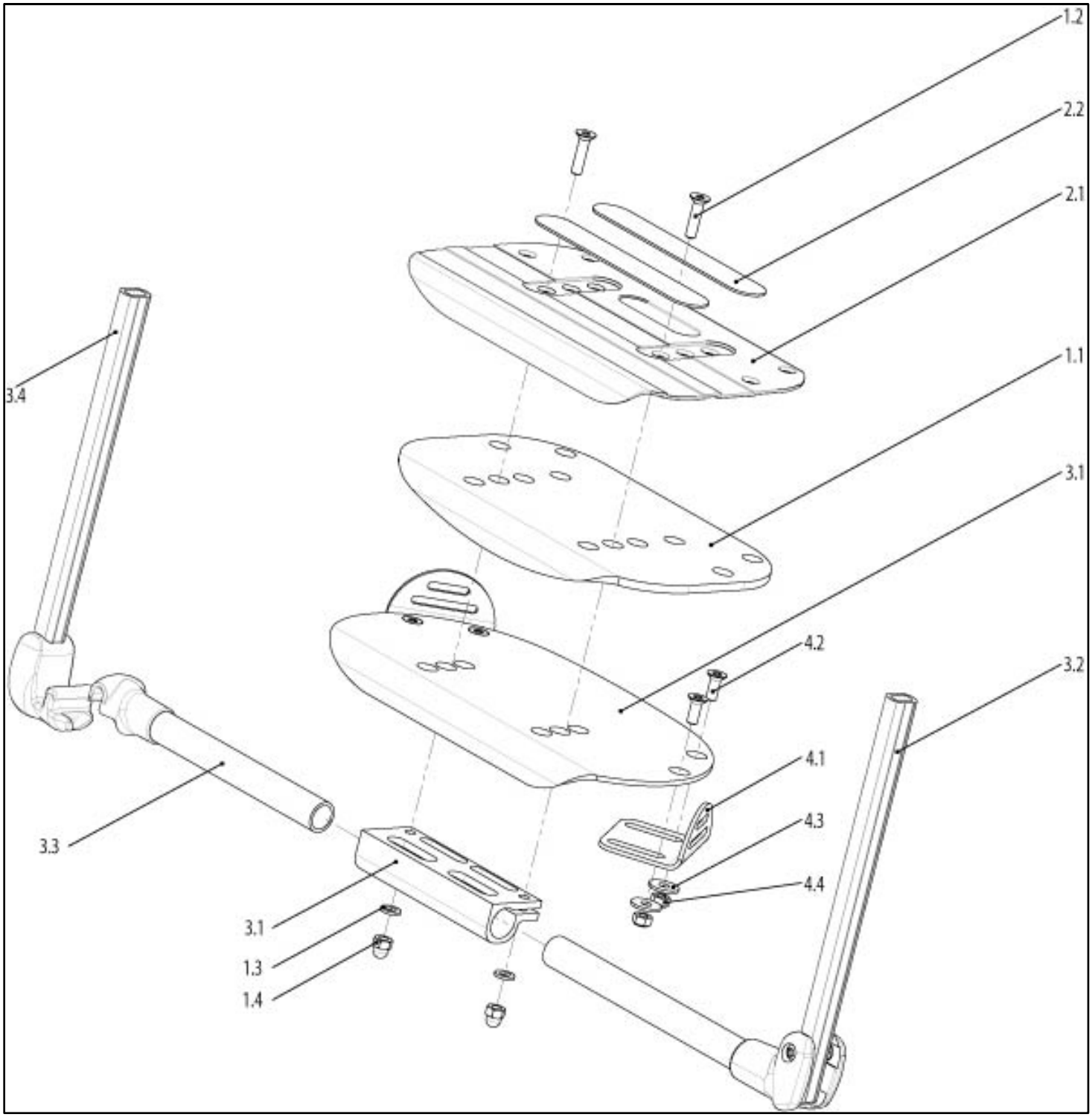

Pos	Itemnumber	Description	Comment
2.2	000821167	Slip resistant coating - Please indicate quantity -	per meter
1.1-1.4, 3.1-3.4	068200-040	Platform footrest depth adj. footplate, composite plate	

Footrest, continuous, angle and depth adjustable, folding upwards, plastic /carbon/ aluminium

Pos	Itemnumber	Description	Comment
1.3-1.4 2.1-3.4	068200-020	Platform footrest depth adj. footplate, carbon plate	
1.1-1.4	068813-000	Composite plate with mounting parts and anti sip sticker	
1.2	000104069-ET	Countersunk screw M 6 x 25 - DIN 7991	10 pcs./pack
1.3	000130007-ET	Washer A 6,4 - DIN 125	25 pcs./pack
1.4	000128049-ET	Hex nut M 6, black galvanized DIN 986	25 pcs./pack
2.1-2.2, 1.2-1.4	068814-000	Carbon plate with mounting parts and anti slip sticker	
2.2	068226-030	Anti slip sticker carbon foot plate cpl., large: SW40 - 46 with 0 inset, SW44 - 46 with 1 inset	1 kit
2.2	068226-010	Antislipsticker Carbonfootplate cpl. small: SW32 + 40 with 0 inset, SW32 - 38 with 1 inset	1 kit
2.2	068226-020	Antislipsticker Carbonfootplate cpl. medium: SW36 + 38 with 0 inset, SW40 + 42 with 1 inset	1 kit
3.1-3.4	068817-000	Footrest angle adj., without footplate	
3.1	062230	Clamp for footplate	
3.2	068207-000	Footrest pivot, left side	
3.3	068205-000	Fork for cross tube, right side	
3.4	068203-000	Receiver with footrest tube	
4.1-4.4	068890	Footrest Positioning Plate	2 pcs./pack
4.2	066902-001-ET	Counter sunk screw M 6 x 16 - DIN 7991	25 pcs./pack
4.3	058904-ET	Washer A 6.4 - DIN 9021	25 pcs./pack

Platform footplate, angle and depth adj., aluminium

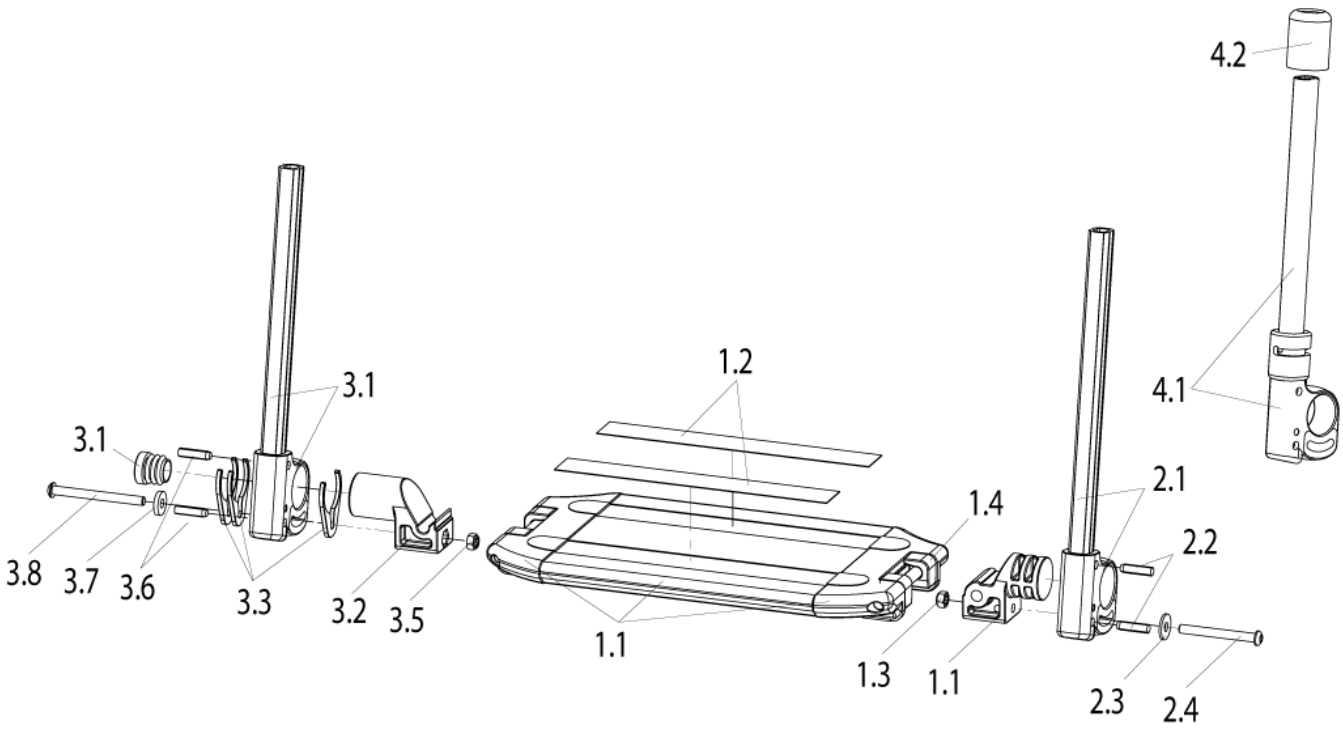

Pos	Itemnumber	Description	Comment
1.1-3.8	84405110-000	Continous Footboard, angle adjustable, aluminium cpl.	
1.1-1.4	762824147	Continous Footboard, angle adjustable , metal	
1.2	000821167	Slip resistant coating (Only available by the metre. Please indicate quantity)	by meter
1.3	000128007-ET	Hex nut M 6 DIN 985	Pack of 25
1.4	760824032-ET	Clamp for footboard adjustment	Pack of 12
2.1-2.4	054200-312	Footrest tube with receiver cpl.	can be used right & left
2.2	000154012-ET	Pin 6 x 22 DIN 1473	Pack of 10
2.3	000130121-ET	Washer A 6,4 DIN 7349	Pack of 25
2.4	000104019-ET	Lens head screw M6 x 55, ISO 7380	25 pieces/pack
3.1-3.8	068200-110	Tube with adapter cpl.	
3.2-3.8	068833	Adapter kpl.	

Platform footplate, angle and depth adj., aluminium

Pos	Itemnumber	Description	Comment
3.3	068233-ET	Distance for length adjustment	6 pcs/pack
3.5	000128007-ET	Nut M6 DIN 985	
3.6	000154012-ET	Pin 6 x 22 DIN 1473	Pack of 6
3.7	000130121-ET	Washer A6,4 DIN 7349	Pack of 25
3.8	066900-011	Screw M6x65 - ISO7380	Pack of 25
4.1-4.2	054234-500	Footrest extension tube with swing-away mechanism cpl.	Paq. de 6
4.2	000282097-ET	PVC cover cap	6 pcs./pack

Platform footplate lightweight, composite, flip-up

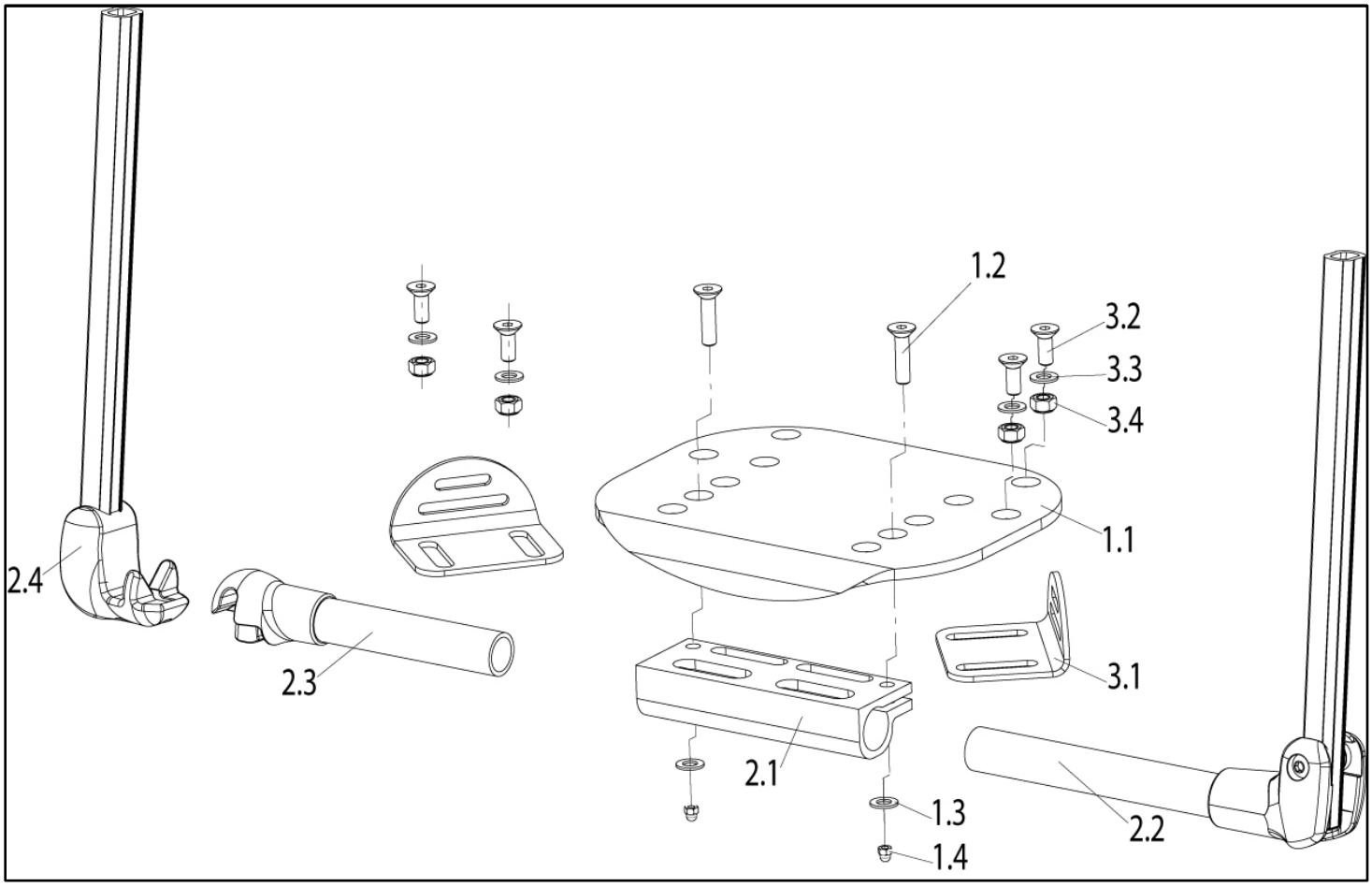

Pos	Itemnumber	Description	Comment
1.1-2.4	068200-040	Platform footrest depth adj. footplate, Composite plate	
1.1-1.4	068813-000	Composite plate with mounting parts and anti sip sticker	
2.1	062230	Clamp for footplate	
2.1 - 2.4	068817-000	Platform footrest depth adj., without footplate	
2.2	068207-000	Footrest pivot, left side	
2.3	068205-000	Fork for cross tube, right side	
2.4	068203-000	Receiver with footrest tube	
1.2	000104069-ET	countersunk screw M6x25 DIN7991	10 pcs./pack
1.3	000130106-ET	Washer A 6.4 DIN 125 PA-clear	10 pcs./pack
1.4	000128049-ET	Hex nut M 6, black galvanized DIN 986	25 pcs./pack
3.1 - 3.4	068890	Footrest Positioning Plate	2 pcs./pack
3.2	066902-001-ET	Counter sunk screw M 6 x 16 - DIN 7991	25 pcs./pack
3.3	058904-ET	Washer A 6,4 DIN 125	25 pcs./pack
3.4	058903-ET	Hex nut M 6 DIN 985	25 pcs./pack
	000821167	Slip resistant coating (only available by the metre. Please indicate quantity)	(per metres)

Fork for fixed frame , Aluminium

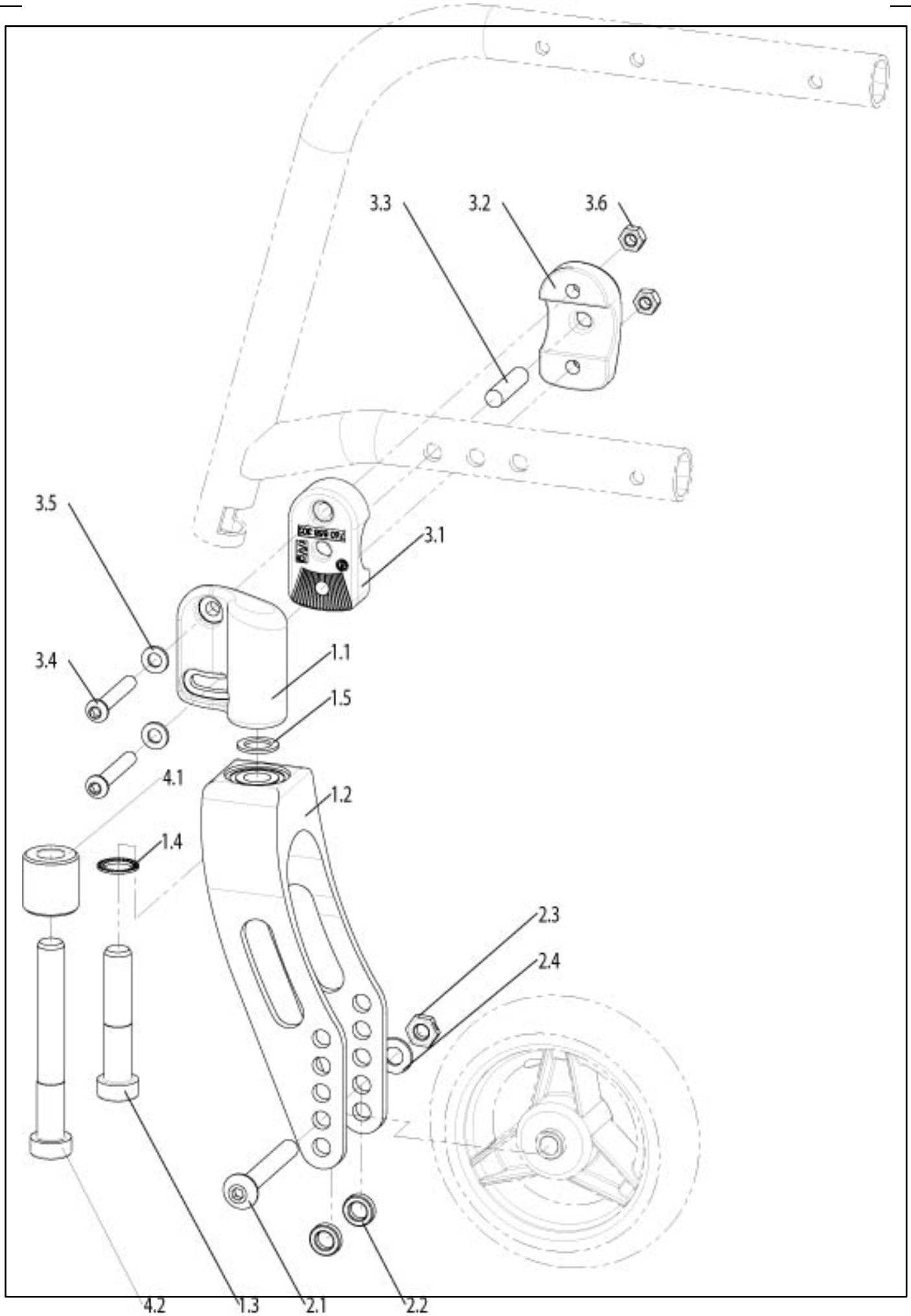
3.3
3.2
3.6
3.5
3.1
3.4
1.1
1.5
4.1
1.2
1.4
2.3
2.4
4.2
1.3
2.1
2.2

Fork for fixed frame , Aluminium

Pos	Itemnumber	Description	Comment
1.1	760858304	Castor adapter, black coated	RH
1.1	760758304	Castor adapter, black coated	LH
1.1-1.5,4.1-4.2	760858330	Castor, round fork, black 168 x 39 with castor adapter, complete	RH
1.1-1.5,4.1-4.2	760758330	Castor, round fork, black 168 x 39 with castor adapter, complete	LH
1.1-1.5,4.1-4.2	072506-001	Castor, round fork, silver 168 x 39 with castor adapter, complete	RH
1.1-1.5,4.1-4.2	072506-002	Castor, round fork, silver 168 x 39 with castor adapter, complete	LH
1.1-1.5,4.1-4.2	072507-001	Castor, round fork, gold orange 168 x 39 with castor adapter, complete	RH
1.1-1.5,4.1-4.2	072507-002	Castor, round fork, gold orange 168 x 39 with castor adapter, complete	LH
1.1-1.5,4.1-4.2	760858331	Castor, round fork, black 168 x 45 with castor adapter, complete	RH
1.1-1.5,4.1-4.2	760758331	Castor, round fork, black 168 x 45 with castor adapter, complete	LH
1.1-1.5,4.1-4.2	072508-001	Castor, round fork, silver 168 x 45 with castor adapter, complete	RH
1.1-1.5,4.1-4.2	072508-002	Castor, round fork, silver 168 x 45 with castor adapter, complete	LH
1.1-1.5,4.1-4.2	072509-001	Castor, round fork, gold orange 168 x 45 with castor adapter, complete	RH
1.1-1.5,4.1-4.2	072509-002	Castor, round fork, gold orange 168 x 45 with castor adapter, complete	LH
1.1-1.5,4.1-4.2	760858332	Castor, round fork, black 143 x 39 with castor adapter, complete	RH
1.1-1.5,4.1-4.2	760758332	Castor, round fork, black 143 x 39 with castor adapter, complete	LH
1.1-1.5,4.1-4.2	072510-001	Castor, round fork, silver 143 x 39 with castor adapter, complete	RH
1.1-1.5,4.1-4.2	072510-002	Castor, round fork, silver 143 x 39 with castor adapter, complete	LH
1.1-1.5,4.1-4.2	072511-001	Castor, round fork, gold orange 143 x 39 with castor adapter, complete	RH

Pos	Itemnumber	Description	Comment
1.1-1.5,4.1-4.2	072511-002	Castor, round fork, gold orange 143 x 39 with castor adapter, complete	LH
1.1-1.5,4.1-4.2	760758335.01	Castor, round fork, coloured with castor adapter, complete	LH
1.1-1.5,4.1-4.2	760858335.01	Castor, round fork, coloured with castor adapter, complete	RH
1.3	000102151-ET	Screw M 12 x 60 mm DIN 6912	
1.4	000138010-ET	Lock Washer 13	Pack of 10
1.5	000131087-ET	Locating disc 12 x 18 x 1.5 DIN 988	Pack of 25
2.1	000104112-ET	Oval-head screw M 8 x 55 ISO 7380 for round fork 143 x 39 and 168 x 39	Pack of 10
2.1	000104113-ET	Oval head screw M8 x 60 ISO 7380	Pack of 10
2.3	000128020-ET	Hex nut M8 Trelock, half height	Pack of 25
2.4	000130108-ET	A 8.4 washer DIN 125	Pack of 25
3.1-3.6	760858350	Fitting accessories for castor fitting, complete. (Frame mount)	-
3.3	000154205-ET	Cylindrical pin 8 x 32 DIN 7	Pack of 25
3.4	000102305.01-ET	Lens head screw M 6 x 40, 8.8 , Tufloc, Trx	Pack of 10
3.5	000130107-ET	Washer A6.4 DIN 125	Pack of 25
3.6	000128007-ET	Hex nut M 6 DIN 985	Pack of 25
1.3-1.5 + 5.1-5.2	84407103	Castor fixation kit	
4.1-4.2	072519-002	HEMI Bracket complete can be used right and left	
-	000101066	Mounting accessories for 6 Inch Castor Soft and 7 Inch Solid and Pneumatic	
-	000101067	Mounting accessories for 3,4,5, 6 Inch Castor Solid and Pneumatic	
2.2	066556-ET	Washer for Castor 2mm	
2.2	71105005-001-ET	Distance for Castoraxle 4mm, Alu	
2.2	71105005-005-ET	Distance for Castoraxle 10mm, Alu	
2.2	058512-ET	Washer for Castor 3,5mm	

Fork for fixed frame , Carbotecture

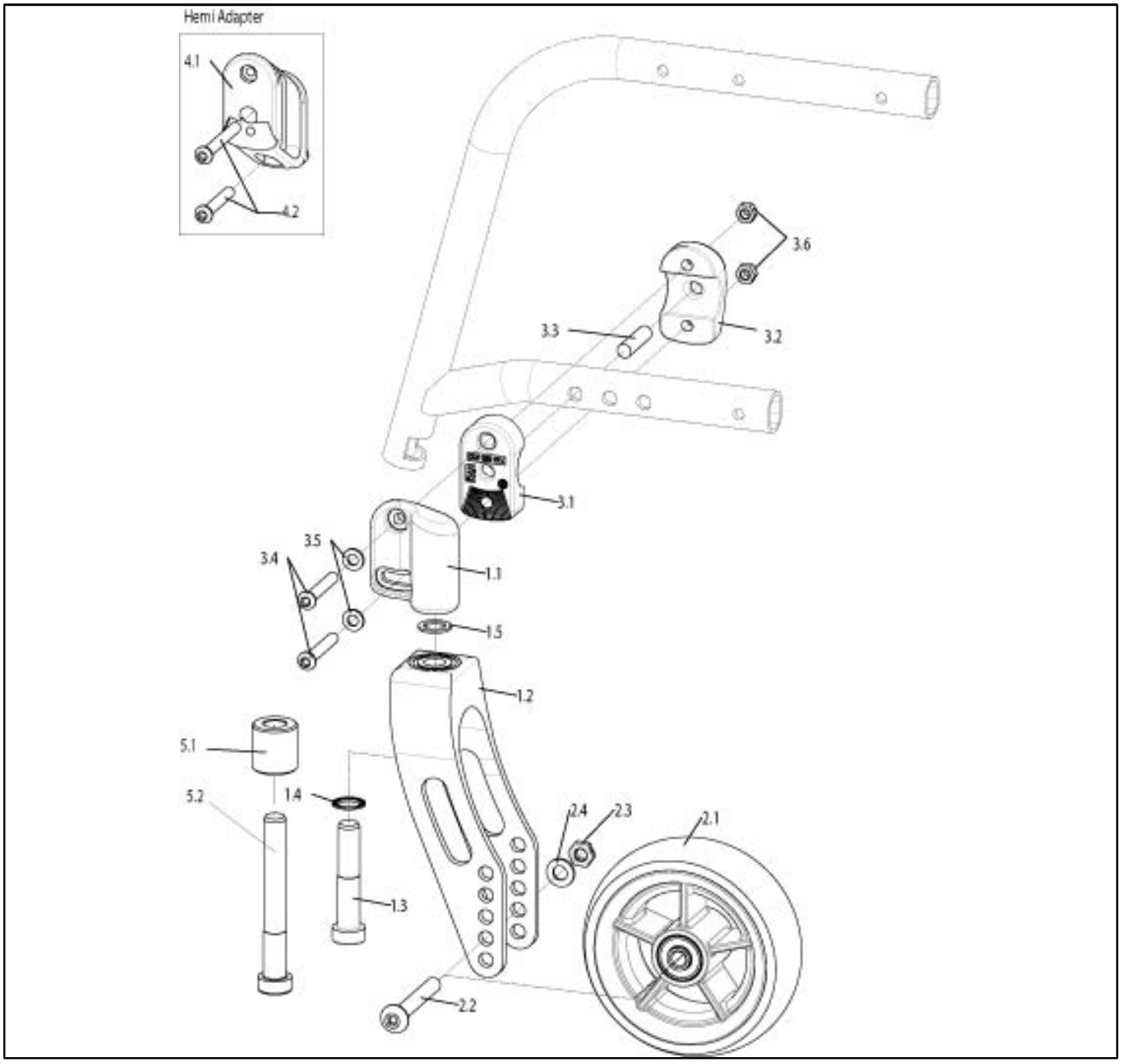

Pos	Itemnumber	Description	Comment
1.1	760858304	Castor adapter, black coated	RH
1.1	760758304	Castor adapter, black coated	LH
1.3	000102151-ET	Screw M 12 x 60 mm DIN 6912	
1.4	000138010-ET	Lock Washer 13	Pack of 10
1.5	000131087-ET	Locating disc 12 x 18 x 1.5 DIN 988	Pack of 25
2.1	000104112-ET	Oval-head screw M 8 x 55 ISO 7380 for round fork 143 x 39 and 168 x 39	Pack of 10

Pos	Itemnumber	Description	Comment
2.1	000104113-ET	Oval head screw M8 x 60 ISO 7380	Pack of 10
2.1	068571	Cator axle for 32 fork cpl.	
2.3	000128020-ET	Hex nut M8 Trelock, half height	Pack of 25
2.4	000130108-ET	A 8.4 washer DIN 125	Pack of 25
3.1-3.6	760858350	Fitting accessories for castor fitting, complete. (Frame mount)	-
3.3	000154205-ET	Cylindrical pin 8 x 32 DIN 7	Pack of 25
3.4	000102305.01-ET	Lens head screw M 6 x 40, 8.8 , Tufloc, Trx	Pack of 10
3.5	000130107-ET	Washer A6.4 DIN 125	Pack of 25
3.6	000128007-ET	Hex nut M 6 DIN 985	Pack of 25
1.3-1.5 + 5.1-5.2	84407103	Castor fixation kit	
-	000101066	Mounting accessories for 6 Inch Castor Soft and 7 Inch Solid and Pneumatic	
-	000101067	Mounting accessories for 3,4,5, 6 Inch Castor Solid and Pneumatic	
2.2	066556-ET	Washer for Castor 2mm	
2.2	71105005-001-ET	Distance for Castoraxle 4mm, Alu	
2.2	71105005-005-ET	Distance for Castoraxle 10mm, Alu	
2.2	058512-ET	Washer for Castor 3,5mm	
1.1-1.5,4.1-4.2	066580-001	Carbotecture ® Fork 123x32 black	
1.1-1.5,4.1-4.2	066580-002	Carbotecture ® Fork 123x32 silver	
1.1-1.5,4.1-4.2	066580-003	Carbotecture ® Fork 123x32 orange	
1.1-1.5,4.1-4.2	066581-001	Carbotecture ® Fork 111x45 black	
1.1-1.5,4.1-4.2	066581-002	Carbotecture ® Fork 111x45 silver	
1.1-1.5,4.1-4.2	066581-003	Carbotecture ® Fork 111x45 orange	
1.1-1.5,4.1-4.2	066582-001	Carbotecture ® Fork 111x32 black	
1.1-1.5,4.1-4.2	066582-002	Carbotecture ® Fork 111x32 silver	
1.1-1.5,4.1-4.2	066582-003	Carbotecture ® Fork 111x32 orange	
1.1-1.5,4.1-4.2	066579-001	Carbotecture ® Fork 123x45 black	

Fork for fixed frame , Carbotecture

Pos	Itemnumber	Description	Comment
1.1-1.5,4.1-4.2	066579-002	Carbotecture ® Fork 123x45 silver	
1.1-1.5,4.1-4.2	066579-003	Carbotecture ® Fork 123x45 orange	
4.1-4.2,1.3-1.5	84609002	Rebuilding Kit (Seatheight)	

Fork for swing away frame , Aluminium

Fork for swing away frame , Aluminium

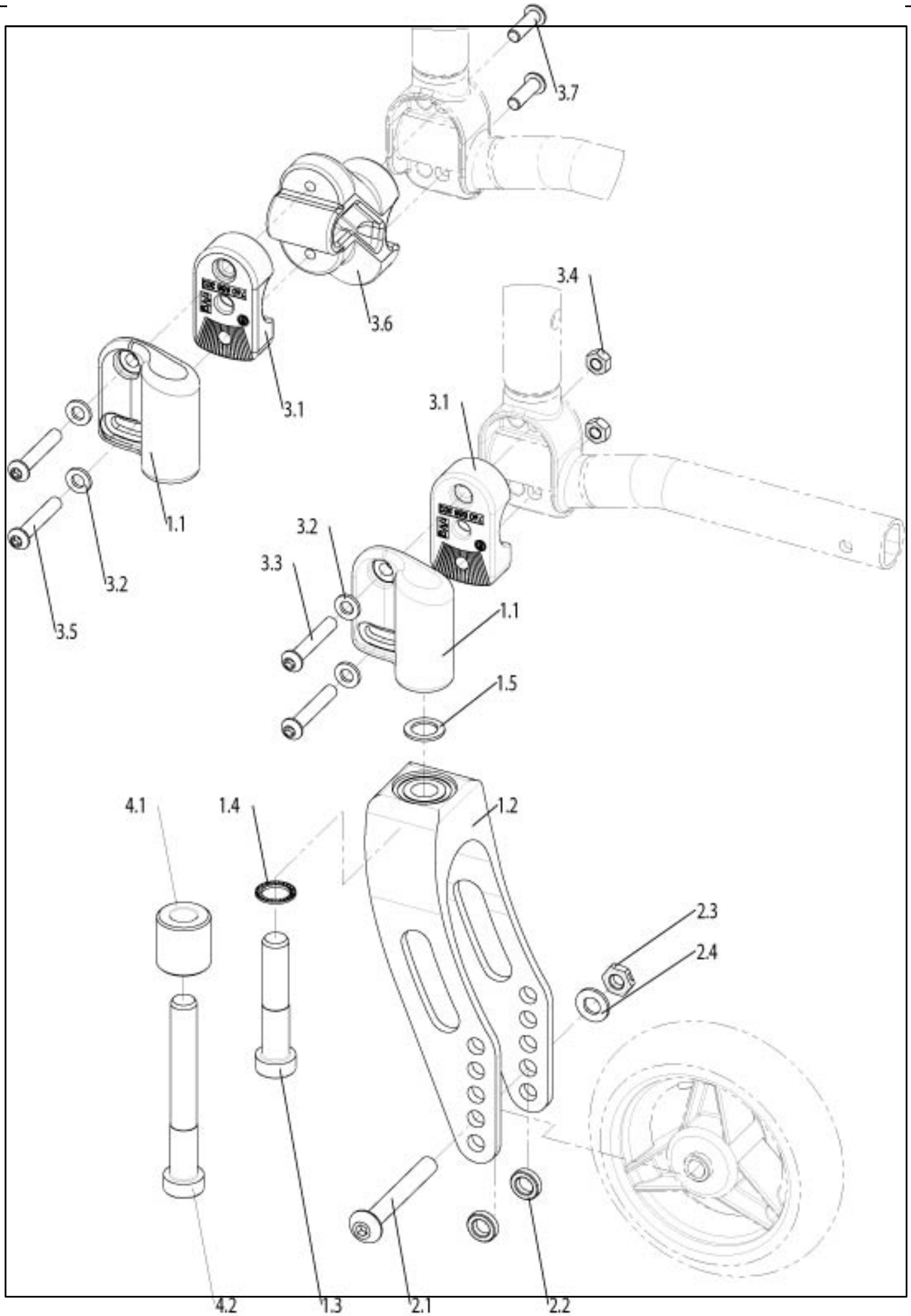

Pos	Itemnumber	Description	Comment
1.1	760858304	Castor adapter, black coated	RH
1.1	760758304	Castor adapter, black coated	LH
1.1-1.5,4.1-4.2	760858330	Castor, round fork, black 168 x 39 with castor adapter, complete	RH
1.1-1.5,4.1-4.2	760758330	Castor, round fork, black 168 x 39 with castor adapter, complete	LH
1.1-1.5,4.1-4.2	072506-001	Castor, round fork, silver 168 x 39 with castor adapter, complete	RH
1.1-1.5,4.1-4.2	072506-002	Castor, round fork, silver 168 x 39 with castor adapter, complete	LH
1.1-1.5,4.1-4.2	072507-001	Castor, round fork, gold orange 168 x 39 with castor adapter, complete	RH
1.1-1.5,4.1-4.2	072507-002	Castor, round fork, gold orange 168 x 39 with castor adapter, complete	LH
1.1-1.5,4.1-4.2	760858331	Castor, round fork, black 168 x 45 with castor adapter, complete	RH
1.1-1.5,4.1-4.2	760758331	Castor, round fork, black 168 x 45 with castor adapter, complete	LH
1.1-1.5,4.1-4.2	072508-001	Castor, round fork, silver 168 x 45 with castor adapter, complete	RH
1.1-1.5,4.1-4.2	072508-002	Castor, round fork, silver 168 x 45 with castor adapter, complete	LH
1.1-1.5,4.1-4.2	072509-001	Castor, round fork, gold orange 168 x 45 with castor adapter, complete	RH
1.1-1.5,4.1-4.2	072509-002	Castor, round fork, gold orange 168 x 45 with castor adapter, complete	LH
1.1-1.5,4.1-4.2	760858332	Castor, round fork, black 143 x 39 with castor adapter, complete	RH
1.1-1.5,4.1-4.2	760758332	Castor, round fork, black 143 x 39 with castor adapter, complete	LH
1.1-1.5,4.1-4.2	072510-001	Castor, round fork, silver 143 x 39 with castor adapter, complete	RH
1.1-1.5,4.1-4.2	072510-002	Castor, round fork, silver 143 x 39 with castor adapter, complete	LH
1.1-1.5,4.1-4.2	072511-001	Castor, round fork, gold orange 143 x 39 with castor adapter, complete	RH

Fork for swing away frame , Aluminium

Pos	Itemnumber	Description	Comment
1.1-1.5,4.1-4.2	072511-002	Castor, round fork, gold orange 143 x 39 with castor adapter, complete	LH
1.1-1.5,4.1-4.2	760758335.01	Castor, round fork, coloured with castor adapter, complete	LH
1.1-1.5,4.1-4.2	760858335.01	Castor, round fork, coloured with castor adapter, complete	RH
1.3	000102151-ET	Screw M 12 x 60 mm DIN 6912	
1.4	000138010-ET	Lock Washer 13	Pack of 10
1.5	000131087-ET	Locating disc 12 x 18 x 1.5 DIN 988	Pack of 25
2.1	000104112-ET	Oval-head screw M 8 x 55 ISO 7380 for round fork 143 x 39 and 168 x 39	Pack of 10
2.1	000104113-ET	Oval head screw M8 x 60 ISO 7380	Pack of 10
2.3	000128020-ET	Hex nut M8 Trelock, half height	Pack of 25
2.4	000130108-ET	A 8.4 washer DIN 125	Pack of 25
3.1-3.6	760858350	Fitting accessories for castor fitting, complete. (Frame mount)	-
3.3	000102317.01-ET	Lense head screw M6x37, Torx	Pack of 25
3.4	000130107-ET	Washer A6.4 DIN 125	Pack of 25
1.3-1.5 + 5.1-5.2	84407103	Castor fixation kit	
3.2,3.5-3.7	072552	HEMI Bracket complete can be used right and left	
-	000101066	Mounting accessories for 6 Inch Castor Soft and 7 Inch Solid and Pneumatic	
-	000101067	Mounting accessories for 3,4,5, 6 Inch Castor Solid and Pneumatic	
2.2	066556-ET	Washer for Castor 2mm	
2.2	71105005-001-ET	Distance for Castoraxle 4mm, Alu	
2.2	71105005-005-ET	Distance for Castoraxle 10mm, Alu	
2.2	058512-ET	Washer for Castor 3,5mm	
3.1-3.4	072551	Mounting accessories for Forkmounting cpl.	LH/RH usable
4.1-4.2,1.3-1.5	84609002	Rebuilding Kit (Seatheight)	

Fork for swing away frame , Carbotecture

Fork for swing away frame , Carbotecture

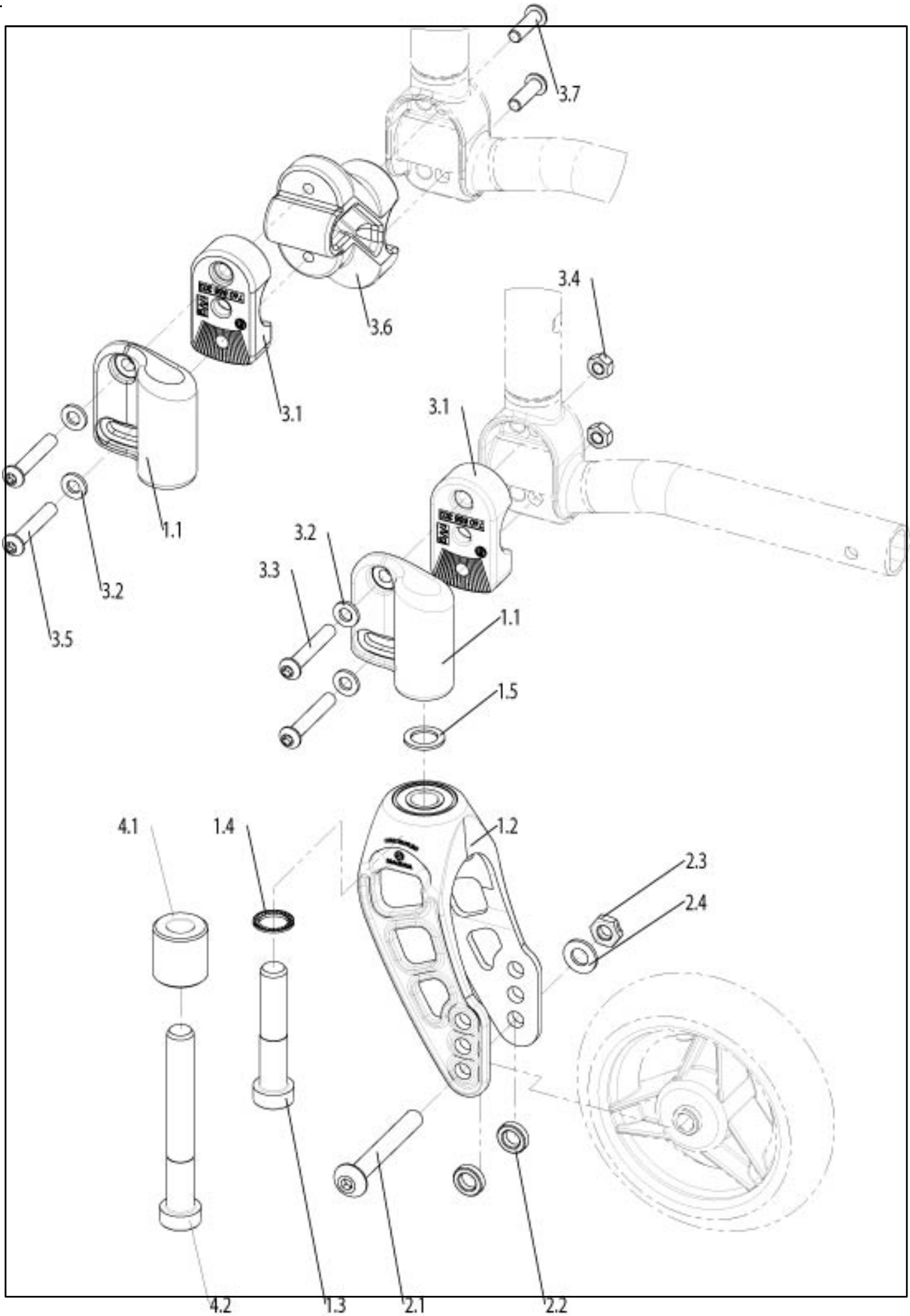

Pos	Itemnumber	Description	Comment
1.1	760858304	Castor adapter, black coated	RH
1.1	760758304	Castor adapter, black coated	LH
1.3	000102151-ET	Screw M 12 x 60 mm DIN 6912	
1.4	000138010-ET	Lock Washer 13	Pack of 10
1.5	000131087-ET	Locating disc 12 x 18 x 1.5 DIN 988	Pack of 25
2.1	000104112-ET	Oval-head screw M 8 x 55 ISO 7380 for round fork 143 x 39 and 168 x 39	Pack of 10
2.1	000104113-ET	Oval head screw M8 x 60 ISO 7380	Pack of 10
2.1	068571	Castor Axle for 32mm Fork cpl.	
2.3	000128020-ET	Hex nut M8 Trelock, half height	Pack of 25
2.4	000130108-ET	A 8.4 washer DIN 125	Pack of 25
3.1-3.6	760858350	Fitting accessories for castor fitting, complete. (Frame mount)	-
3.3	000102317.01-ET	Lense head screw M6x37, Torx	Pack of 25
3.4	000130107-ET	Washer A6.4 DIN 125	Pack of 25
1.3-1.5 + 5.1-5.2	84407103	Castor fixation kit	
3.2,3.5-3.7	072552	HEMI Bracket complete can be used right and left	
-	000101066	Mounting accessories for 6 Inch Castor Soft and 7 Inch Solid and Pneumatic	
-	000101067	Mounting accessories for 3,4,5, 6 Inch Castor Solid and Pneumatic	
2.2	066556-ET	Washer for Castor 2mm	
2.2	71105005-001-ET	Distance for Castoraxle 4mm, Alu	
2.2	71105005-005-ET	Distance for Castoraxle 10mm, Alu	
2.2	058512-ET	Washer for Castor 3,5mm	
3.1-3.4	072551	Mounting accessories for Forkmounting cpl.	LH/RH usable
1.1-1.5,4.1-4.2	066580-001	Carbotecture ® Fork 123x32 black	
1.1-1.5,4.1-4.2	066580-002	Carbotecture ® Fork 123x32 silver	
1.1-1.5,4.1-4.2	066580-003	Carbotecture ® Fork 123x32 orange	
1.1-1.5,4.1-4.2	066581-001	Carbotecture ® Fork 111x45 black	
1.1-1.5,4.1-4.2	066581-002	Carbotecture ® Fork 111x45 silver	
1.1-1.5,4.1-4.2	066581-003	Carbotecture ® Fork 111x45 orange	
1.1-1.5,4.1-4.2	066582-001	Carbotecture ® Fork 111x32 black	

Fork for swing away frame , Carbotecture

Pos	Itemnumber	Description	Comment
1.1-1.5,4.1-4.2	066582-002	Carbotecture ® Fork 111x32 silver	
1.1-1.5,4.1-4.2	066582-003	Carbotecture ® Fork 111x32 orange	
1.1-1.5,4.1-4.2	066579-001	Carbotecture ® Fork 123x45 black	
1.1-1.5,4.1-4.2	066579-002	Carbotecture ® Fork 123x45 silver	
1.1-1.5,4.1-4.2	066579-003	Carbotecture ® Fork 123x45 orange	
4.1-4.2,1.3-1.5	84609002	Rebuilding Kit (Seatheight)	

Castors

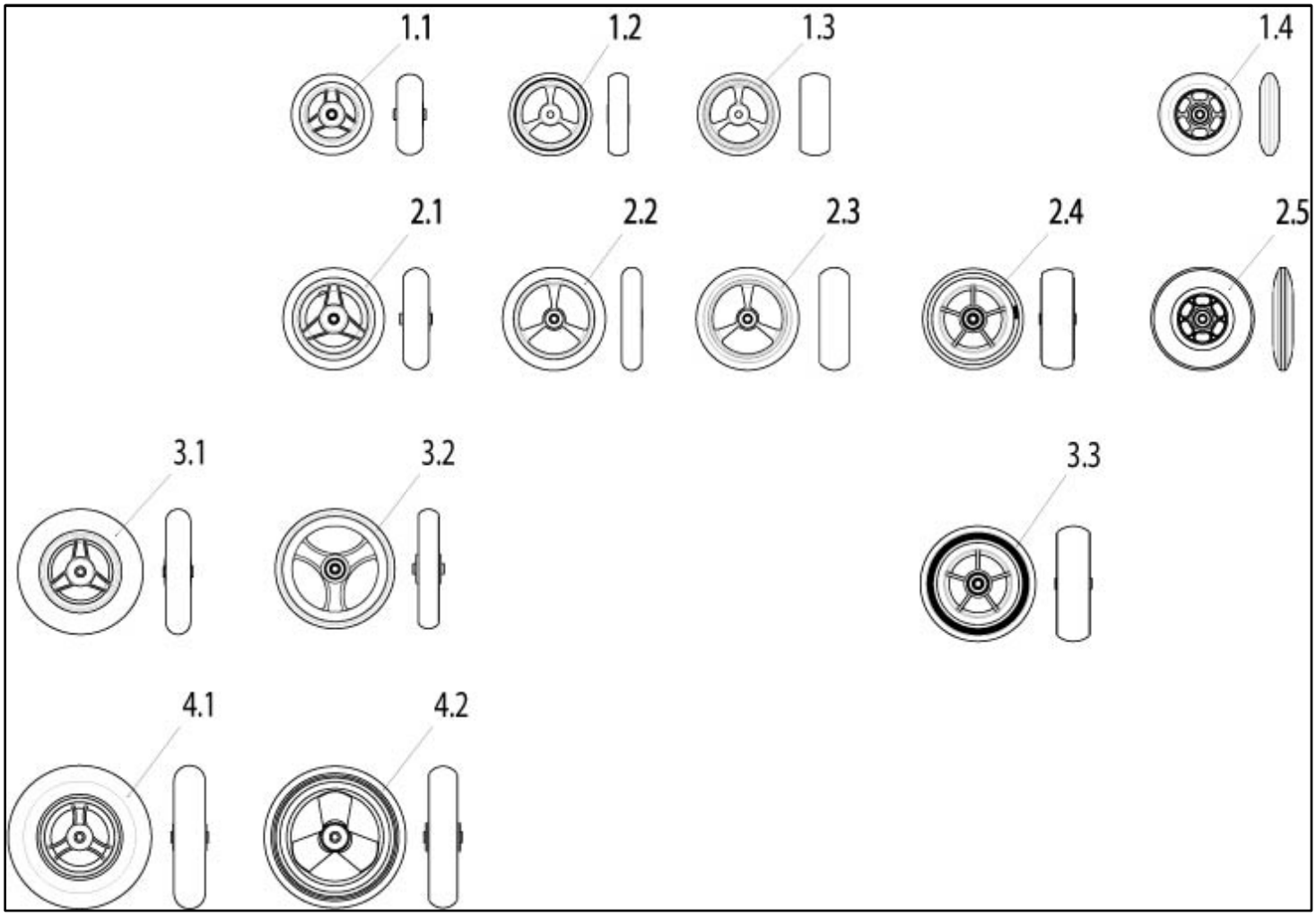

Pos	Itemnumber	Description	Comment
1.1	000221034	Castor 4 Inch Solid	
1.2	066542	Castor 4 Inch Aluminium Solid	
1.3	066544	Castor 4 Inch Aluminium Soft	
1.4	000221036	Castor 4 Inch Light up	
2.1	000221035	Castor 5 Inch Solid	
2.2	066546	Castro 5 Inch Aluminium Solid	
2.3	066548	Castor 5 Inch Aluminium Soft	
2.4	000221005	Castor 5 Inch Soft	
2.5	Q052129-ET	Castor 5 Inch Light up	2 pcs./pack, Note: Design change starting week 08/2015
3.1	000221013	Castor 6 Inch Pneumatic	
3.2	000858046	Castor 6 Inch Solid	
3.3	000221016	Castor 6 Inch Soft	

Castors

Pos	Itemnumber	Description	Comment
4.1	000221015.01	Castor 7 Inch Pneumatic	
4.2	000858150	Castor 7 Inch Solid	

Front Frame for Swing Away Footrest

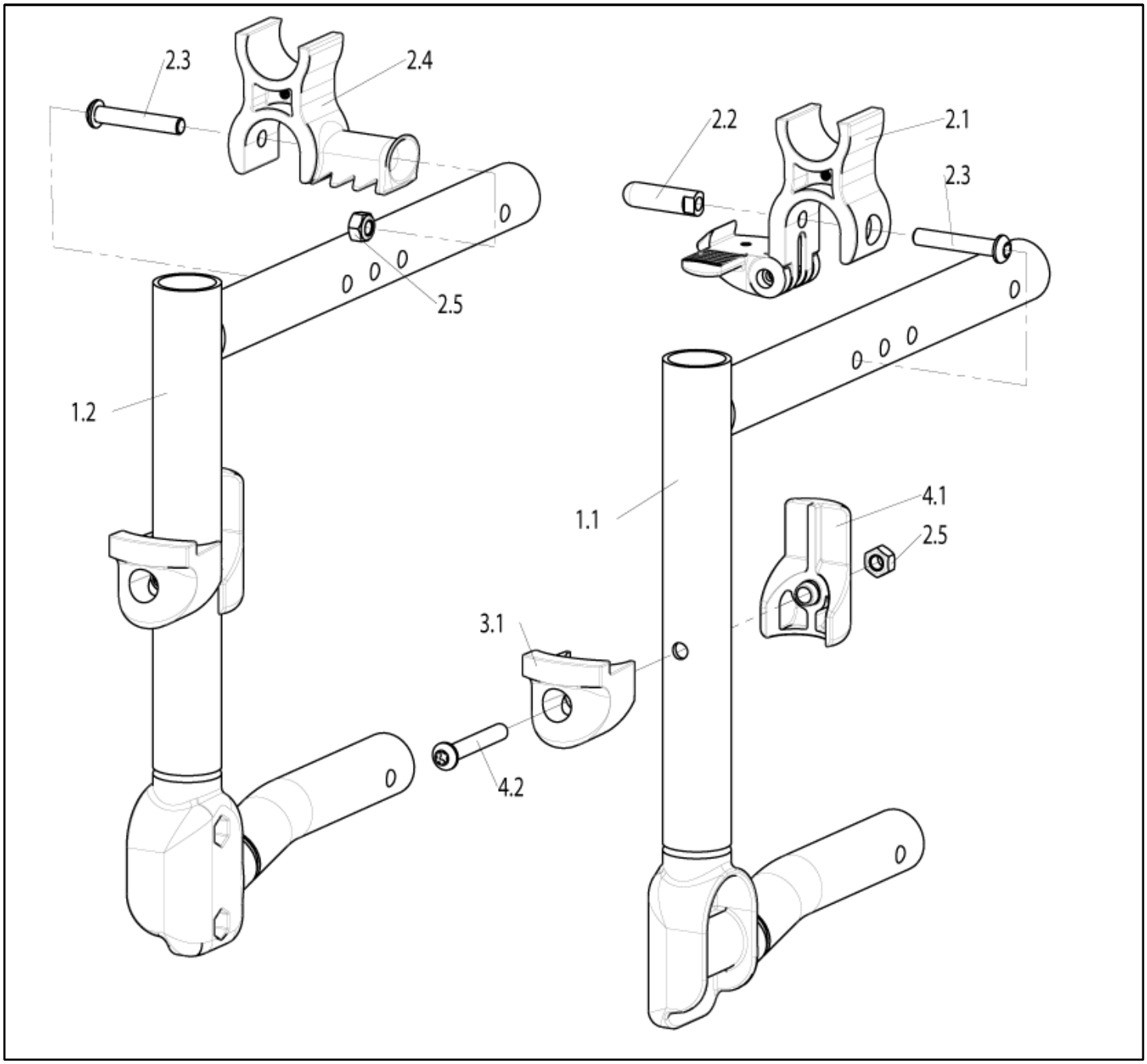

Pos	Itemnumber	Description	Comment
1.1	072141-001	SWINGAWAY FRAME, LH SD36-40, COLORED	
1.1	072141-002	SWINGAWAY FRAME, LH SD42-44, COLORED	
1.1	072141-003	SWINGAWAY FRAME, LH SD46-50, COLORED	
1.2	072142-001	SWINGAWAY FRAME, RH SD36-40, COLORED	
1.2	072142-002	SWINGAWAY FRAME, RH SD42-44, COLORED	
1.2	072142-003	SWINGAWAY FRAME, RH SD46-50, COLORED	
2.1-2.5	71101020-000	Automatical Folding Fixation complete	all SW

Front Frame for Swing Away Footrest

Pos	Itemnumber	Description	Comment
2.3	000102304.01-ET	Lens head screw M 6 x 35, 8.8 , Tufloc, Trx	25 pcs./pack
2.5	000128007-ET	Hex nut M 6 DIN 985	25 pcs./pack
3.1+4.1-4.2+2.5	072134	Mounting accessory for plastic material footrest (starting week 24/2013)	
4.2	000102305.01-ET	Oval head screw M6 x 40 with Torx drive	25 pcs./pack
	000412.6307-ET	Sticker - Fixation point -, white	4 pcs./pack
	000412.6309-ET	Sticker - Fixation point -, black	4 pcs./pack
	84609020-000	Easy Life T Label (all Colours)	
-	71102019-ET	Hanger stop	2 pcs./pack
2.1-2.5	765812015	Folding Fixation complete	

Front Frame for Fixed Footrest

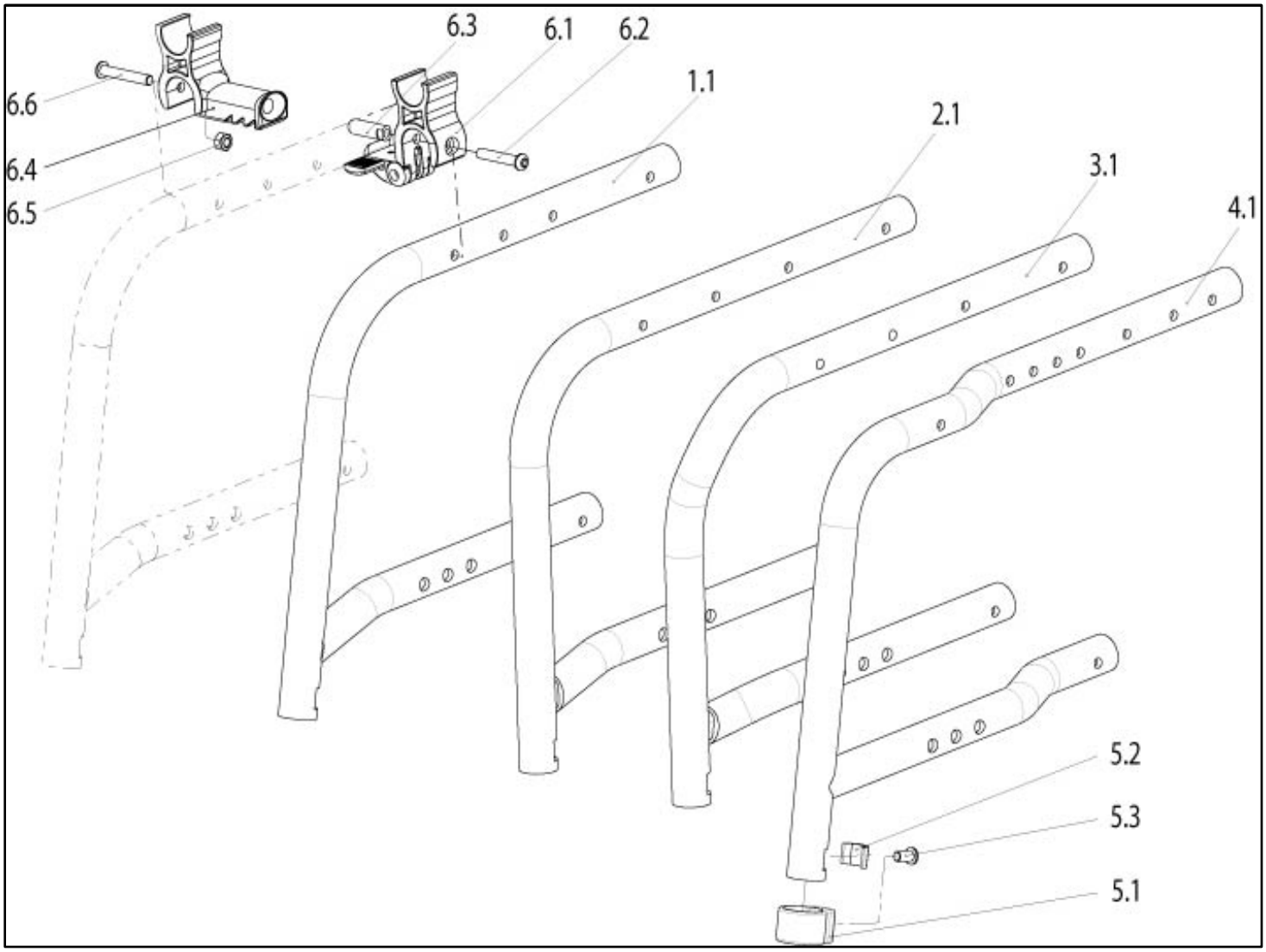

Pos	Itemnumber	Description	Comment
1.1	072127-001	FIXED FRAME 75°, SD36-40, COLORED	LH&RH useable
1.1	072127-002	FIXED FRAME 75°, SD42-44, COLORED	LH&RH useable
1.1	072127-003	FIXED FRAME 75°, SD46-48, COLORED	LH&RH useable
2.1	84401006-001-ET	FIXED FRAME 85°, SD36-40, COLORED	LH&RH useable
2.1	84401006-002-ET	FIXED FRAME 85°, SD42-44, COLORED	LH&RH useable
2.1	84401006-003-ET	FIXED FRAME 85°, SD46-48, COLORED	LH&RH useable
3.1	84401009-101-ET	FIXED FRAME 85°, 2cm inset, SD36-40, COLORED	LH
3.1	84401009-102-ET	FIXED FRAME 85°, 2cm inset, SD42-44, COLORED	LH
3.1	84401009-103-ET	FIXED FRAME 85°, 2cm inset, SD46-48, COLORED	LH

Front Frame for Fixed Footrest

Pos	Itemnumber	Description	Comment
3.1	84401009-201-ET	FIXED FRAME 85°, 2cm inset, SD36-40, COLORED	RH
3.1	84401009-202-ET	FIXED FRAME 85°, 2cm inset, SD42-44, COLORED	RH
3.1	84401009-203-ET	FIXED FRAME 85°, 2cm inset, SD46-48, COLORED	RH
5.3	000102304.01-ET	Lens head screw M 6 x 35, 8.8 , Tufloc, Trx	Pack of 25
5.5	000128007-ET	Hex nut M 6 DIN 985	Pack of 25
5.1-5.3	750826006	Fitting accesories for footplate	
6.1-6.6	71101020-000	Automatical Folding Fixation complete	all SW
-	765812015	Folding Fixation complete	
4.1	84601310-201-ET	FIXED FRAME 85°, ABDU, SD32-34; COLORED	RH
4.1	84601310-202-ET	FIXED FRAME 85°, ABDU, SD36-38; COLORED	RH
4.1	84601310-203-ET	FIXED FRAME 85°, ABDU, SD40-46; COLORED	RH
4.1	84601310-211-ET	FIXED FRAME 85°, ABDU, SD32-34; COLORED	LH
4.1	84601310-212-ET	FIXED FRAME 85°, ABDU, SD36-38; COLORED	LH
4.1	84601310-213-ET	FIXED FRAME 85°, ABDU, SD40-46; COLORED	LH
-	84609020-000	Easy Life T Label (all Colours)	

Connection Profil

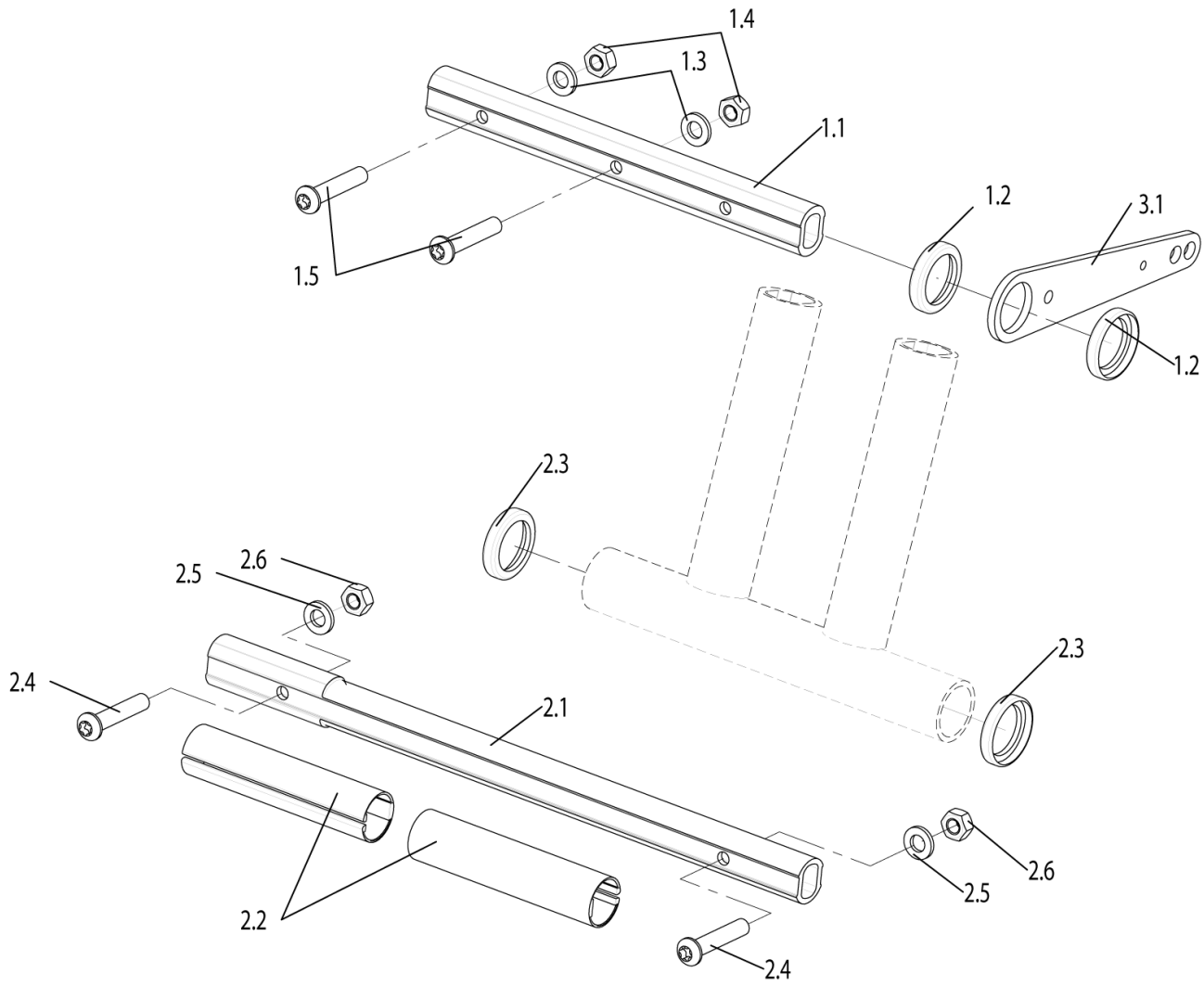

Pos	Itemnumber	Description	Comment
1.1-1.5	84606004	Upper Connetion tube cpl. for FF/SA/Insert Frame	
1.1-1.5	84606002	Upper Connetion tube cpl. for Abdu Frame	
2.1-2.6	84606003	Lower Connetion tube cpl. for FF/SA/Insert Frame	
2.1-2.6	84606001	Lower Connetion tube cpl. for Abdu Frame	
1.5	000102312.01-ET	Oval-head screw M 6 x 32 with Torx drive	Pack of 25
1.2	760812002-ET	Distance washer	Pack of 10
1.3	000130107-ET	Washer A6.4 DIN 125	Pack of 25
1.4	000128007-ET	Hex nut M 6 DIN 985	Pack of 25
2.2	760831004-ET	Spilt bearing	Pack of 10
2.3	760812002-ET	Distance washer	Pack of 10

Pos	Itemnumber	Description	Comment
2.4	000102312.01-ET	Oval-head screw M 6 x 32 with Torx drive	Pack of 25
2.5	000130107-ET	Washer A6.4 DIN 125	Pack of 25
2.6	000128007-ET	Hex nut M 6 DIN 985	Pack of 25
3.1	760831005.02	Cross-brace bracket for SW: 36/38	
3.1	760831005.03	Cross-brace bracket for SW: 40	
3.1	760831005.04	Cross-brace bracket for SW: 44-46	
3.1	760831006	Cross-brace bracket for SW: 48-50	
3.1	760831005.01	Cross-brace bracket for SW: 32/34	
3.1	84602201	Cross-brace bracket for SW: 28/30	

Back Frame

Rahmen für Rücken STD / Rücken abklappbar
Frame used with STD backrest / swing away backrest

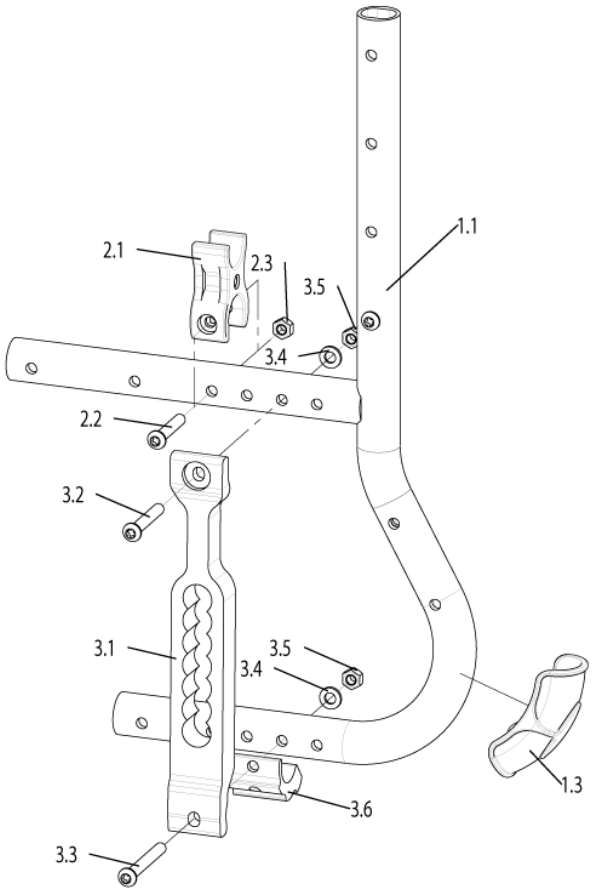

Rahmen für Rücken winkeleinstellbar
Frame used with angle adjustable backrest

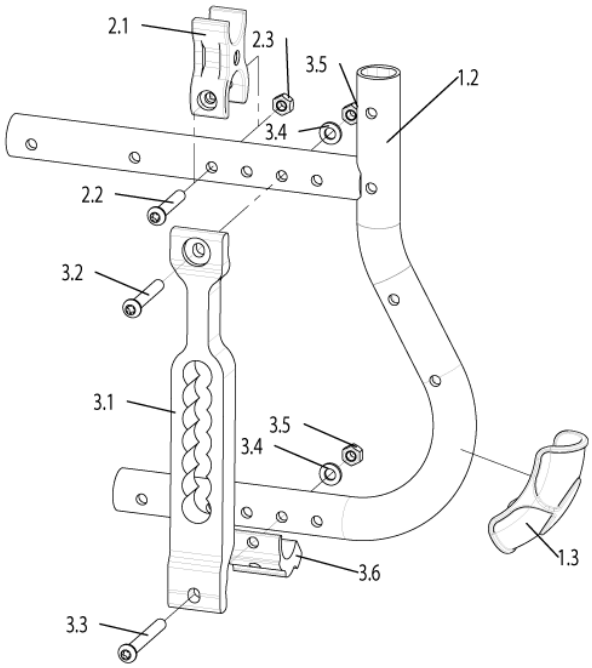

Pos	Itemnumber	Description	Comment
1.1,1.3	072128-001	Rear Frame standard, colored left	
1.1,1.3	072128-002	Rear Frame standard, colored right	
1.2,1.3	072128-003	Rear Frame angle adjustable back, colored	
1.3	072110-ET	Rear Frame Cover	Pack of 2
2.1-2.3	760812001.01	Support with fitting accessories, complete	2 pcs./pack
2.2	000102304.01-ET	Lens head screw M 6 x 35, 8.8 , Tufloc, Trx	Pack of 25
2.3	000128007-ET	Hex nut M 6 DIN 985	Pack of 25
3.1-3.5	072129-001	Axleplate 7-Holes complete, black anodized	
3.1-3.5	072129-002	Axleplate 7-Holes complete, silver anodized	
3.1-3.5	072129-003	Axleplate 7-Holes complete, gold orange anodized	
3.2	000102305.01-ET	Lens head screw M 6 x 40, 8.8 , Tufloc, Trx	Pack of 25
3.3	000102313.01-ET	Oval head screw M6 x 50 with Torx drive	Pack of 25

Back Frame

Pos	Itemnumber	Description	Comment
3.4	000130107-ET	Washer A6.4 DIN 125	Pack of 25
3.5	000128007-ET	Hex nut M 6 DIN 985	Pack of 25
3.3-3.6	072130	Wheel Camber Bracket complete, silver anodized	
3.3-3.6	072131	Wheel Camber Bracket complete, black anodized	
3.3-3.6	072132	Wheel Camber Bracket complete, gold orange anodized	
3.3	000102313.01-ET	Oval head screw M6 x 50 with Torx drive	Pack of 25
3.4	000130107-ET	Washer A6.4 DIN 125	Pack of 25
3.5	000128007-ET	Hex nut M 6 DIN 985	Pack of 25
1.1,1.3	84601150-101	Rear Frame for standard back, coloured RH	only for andu frame SD32-42
1.1,1.3	84601150-200-ET	Rear Frame for standard back, coloured 1side	only for andu frame SD32-42
1.1,1,3	84601150-102	Rear Frame for standard back, coloured LH	only for andu frame SD32-42

Crash Test Option

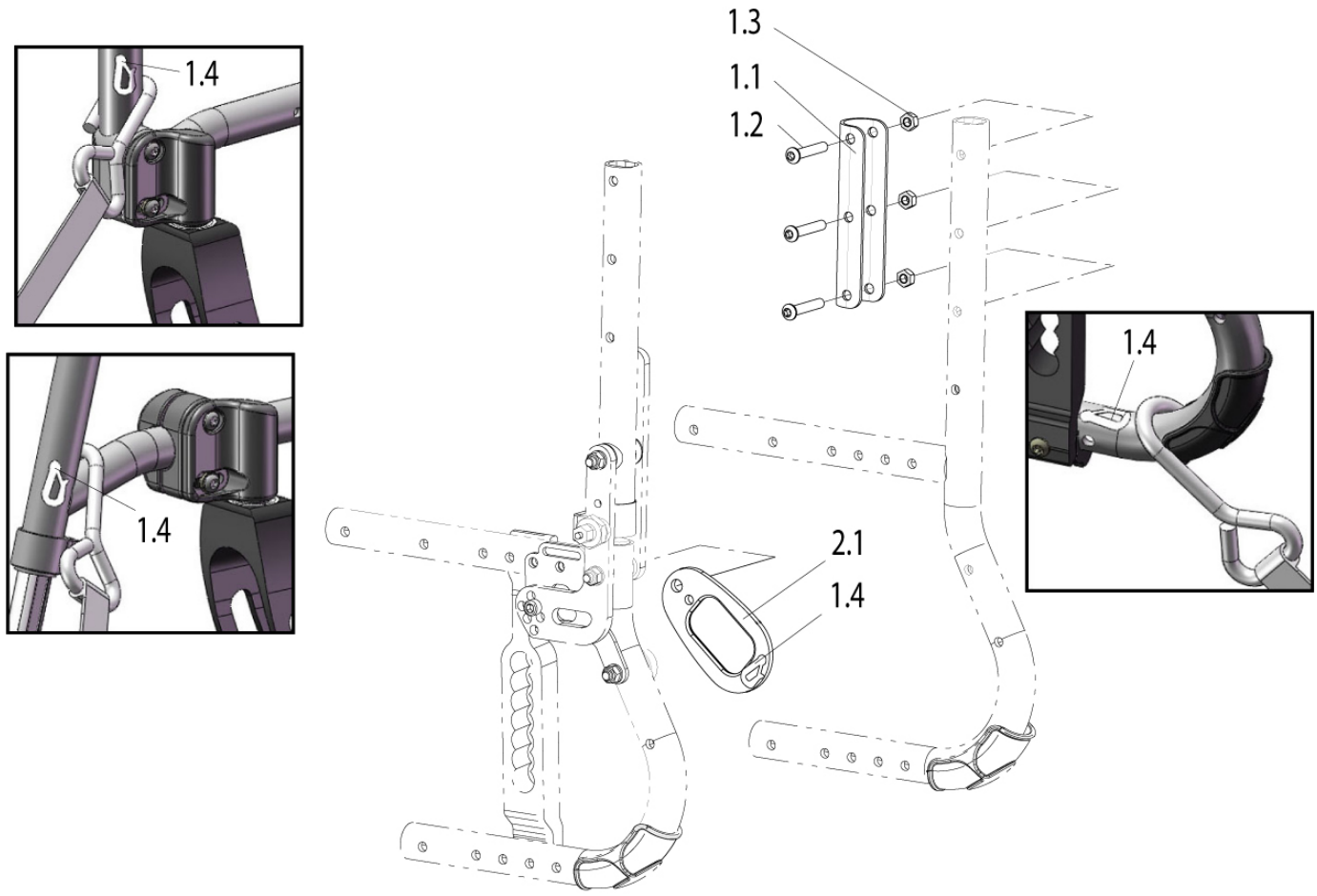

Pos	Itemnumber	Description	Comment
1.1-1.4	072467	Transport lock cpl. (1Pack for RH and LH)	
1.2	000102304.01-ET	Button head cap screw M 6 x 35 Torx-drive	25 Pc/Pac.
1.3	000128007-ET	Hex nut M 6 DIN 985	25 pcs./pack
1.4	000412.6309-ET	Label - Tie down point -, black	4 pcs/pack
1.4	000412.6307-ET	Label - Tie down point -, white	4 pcs./pack
2.1+1.4	84409100	Transport lock for angle adj. backrest incl. mounting accessories and tie down labels	2 pcs./pack

Half Folding Back

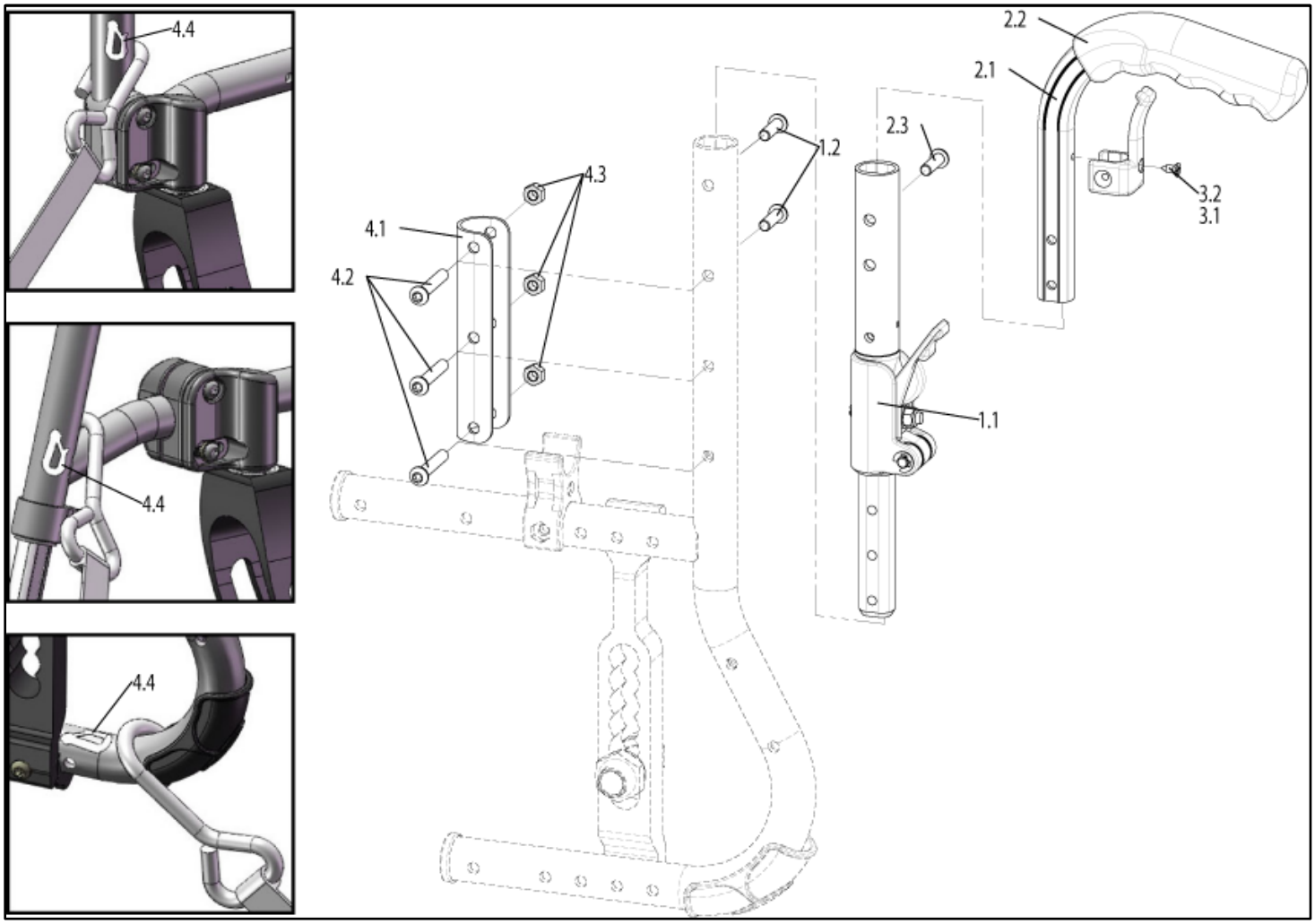

Pos	Itemnumber	Description	Comment
1.1-3.2	072427-001	Half Folding Back complete BH40	can be used right & left
1.1-3.2	072427-002	Half Folding Back complete BH45	can be used right & left
1.1-1.2	072428	Half Folding Back Mech complete	
1.2	000102307.01-ET	Button head cap screw M 6 x 20 Torx drive	Pack of 25
2.1-2.3	072429-001	Backtubr for Half Folding Back BH40	can be used right & left
2.1-2.3	072429-002	Backtubr for Half Folding Back BH45	can be used right & left
2.2	71104052-ET	Grip for back tube (incl. glue)	10 pcs./pack
-	000050008.01-ET	2 component stickers for handle (small letters)	Pack of 5
2.3	000102307.01-ET	Button head cap screw M 6 x 20 Torx drive	Pack of 25
3.1-3.2	760949901	Accessories back upholstery adjustable (gebogener clamp) cpl.	Pair
3.2	000114005-ET	Countersunk screw ST 3,9 x 16 - DIN 7982	Pack of 25
4.1-4.4	072467	Transport lock cpl. (1Pack for RH and LH)	

Pos	Itemnumber	Description	Comment
4.2	000102304.01ET	Oval head screw M6 x 37 with Torx drive	Pack of 25
4.3	000128007-ET	Hex nut M 6 DIN 985	Pack of 25
4.4	000412.6307-ET	Label - Tie down point -, white	4 pcs./pack
4.4	000412.6309-ET	Label - Tie down point -, black	4 pcs/pack

Back Angle Adjustable

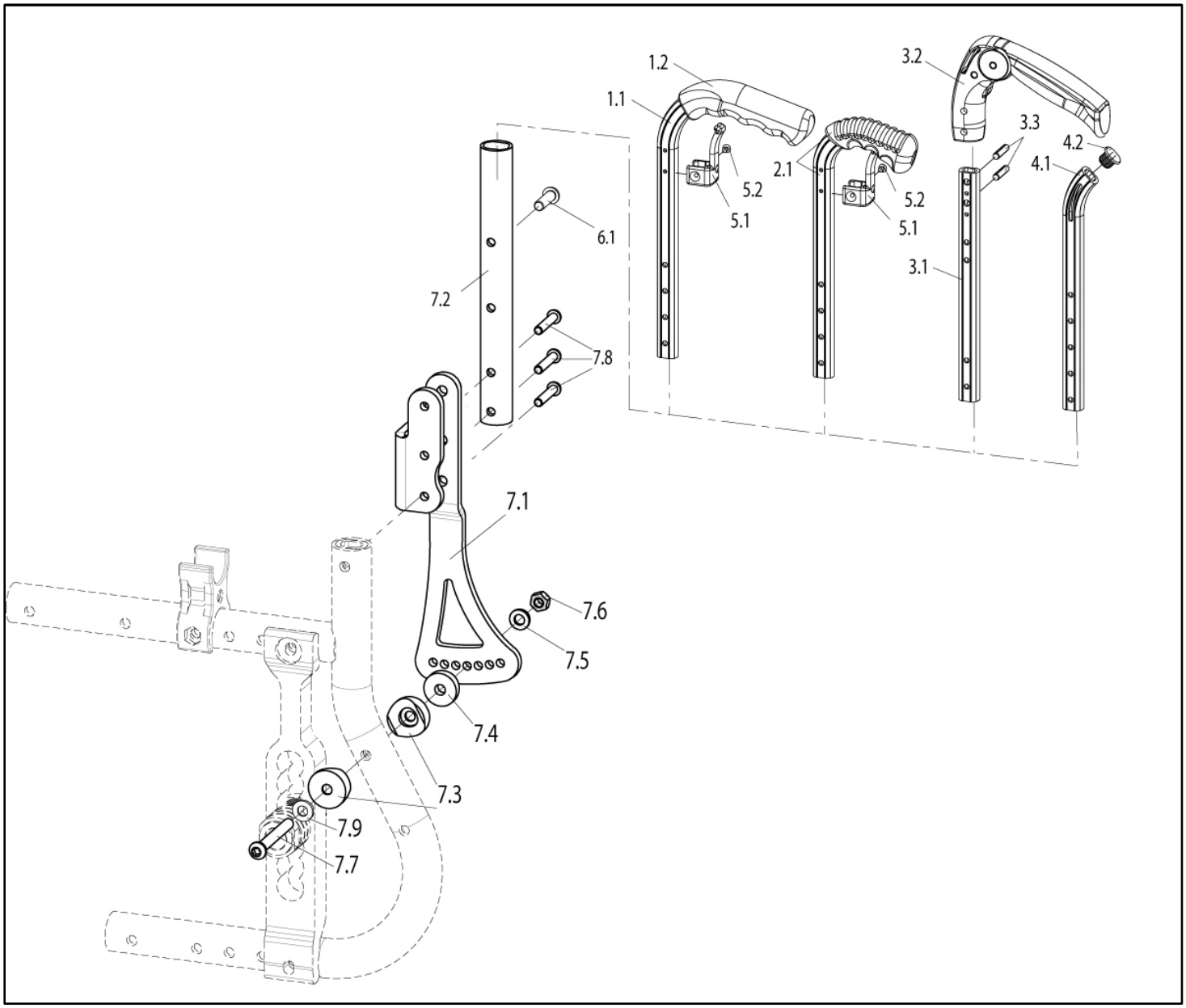

Pos	Itemnumber	Description	Comment
1.1-1.2, 5.1-5.2, 6.1	072430-001	Rigid back tube Long Push Handles, Angle adj. BH30	
1.1-1.2, 5.1-5.2, 6.1	072430-002	Rigid back tube Long Push Handles, Angle adj. BH35	
1.1-1.2, 5.1-5.2, 6.1	072430-003	Rigid back tube Long Push Handles, Angle adj. BH40	
1.1-1.2, 5.1-5.2, 6.1	072430-004	Rigid back tube Long Push Handles, Angle adj. BH45	
1.2	71104052-ET	Grip for back tube (incl. glue)	10 pcs./pack

Pos	Itemnumber	Description	Comment
-	000050008.01-ET	2 component stickers for handle (small letters)	Pack of 5
2.1, 5.1-5.2, 6.1	072431-001	Back tube with short push handle, Angle adj. BH25	
2.1, 5.1-5.2, 6.1	072431-002	Back tube with short push handle, Angle adj. BH30	
2.1, 5.1-5.2, 6.1	072431-003	Back tube with short push handle, Angle adj. BH35	
2.1, 5.1-5.2, 6.1	072431-004	Back tube with short push handle, Angle adj. BH40	
2.1, 5.1-5.2, 6.1	072431-005	Back tube with short push handle, Angle adj. BH45	
3.1-3.3, 6.1	072432-001	Back tube with Folding push handle, Angle adj. BH35	
3.1-3.3, 6.1	072432-002	Back tube with Folding push handle, Angle adj. BH40	
3.1-3.3, 6.1	072432-003	Back tube with Folding push handle, Angle adj. BH45	
4.1-4.2, 6.1	072433-001	Back tube without push handle, Angle adj. BH25	
4.1-4.2, 6.1	072433-002	Back tube without push handle, Angle adj. BH30	
4.1-4.2, 6.1	072433-003	Back tube without push handle, Angle adj. BH35	
4.1-4.2, 6.1	072433-004	Back tube without push handle, Angle adj. BH40	
4.1-4.2, 6.1	072433-005	Back tube without push handle, Angle adj. BH45	
-	072469-001	Back tube for Drumbrake angle adj. BH30	
-	072469-002	Back tube for Drumbrake angle adj. BH35	
-	072469-003	Back tube for Drumbrake angle adj. BH40	
-	072469-004	Back tube for Drumbrake angle adj. BH45	
4.2	760841001-ET	End stoppers for profile tube	Pack of 10
5.1-5.2	760949901	Accessories back upholstery adjustable (gebogener clamp) cpl.	Pair
5.2	000114005-ET	Countersunk screw ST 3,9 x 16 - DIN 7982	Pack of 25
6.1	000102307.01-ET	Button head cap screw M 6 x 20 Torx drive	Pack of 25
7.1-7.9	07204001	Angle adjustable back cpl.	left
7.1-7.9	07204002	Angle adjustable back cpl.	right
7.1-7.9	07204003	Angle adjustable back cpl.	pair
7.3	000831232-ET	Half-liner for brake holder	Pack of 10
7.4	000130103-ET	Washer 20 x 6.4 x 5	pack of 4
7.5	000130107-ET	Washer 6,4 DIN 9021	Pack of 25
7.6	000128007-ET	Hex nut M 6 DIN 985	Pack of 25
7.7	000102313.01-ET	Oval head screw M6 x 50 with Torx drive	Pack of 25
7.8	000102312.01-ET	Oval-head screw M 6 x 32 with Torx drive	Pack of 25
7.9	066947-001-ET	Washer A6,4 DIN9021	Pack of 25

Back Angle Adjustable

Pos	Itemnumber	Description	Comment
-	07204001	Angle adjustable back cpl. for alu and carbon sideguard	right
-	07204002	Angle adjustable back cpl. for alu and carbon sideguard	left
-	07204003	Angle adjustable back cpl. for alu and carbon sideguard	pair
-	07204001	Angle adjustable back cpl. for safari sieguard	right
-	07204002	Angle adjustable back cpl. for safari sieguard	left
-	07204003	Angle adjustable back cpl. for safari sieguard	pair

Back tubes for standard back

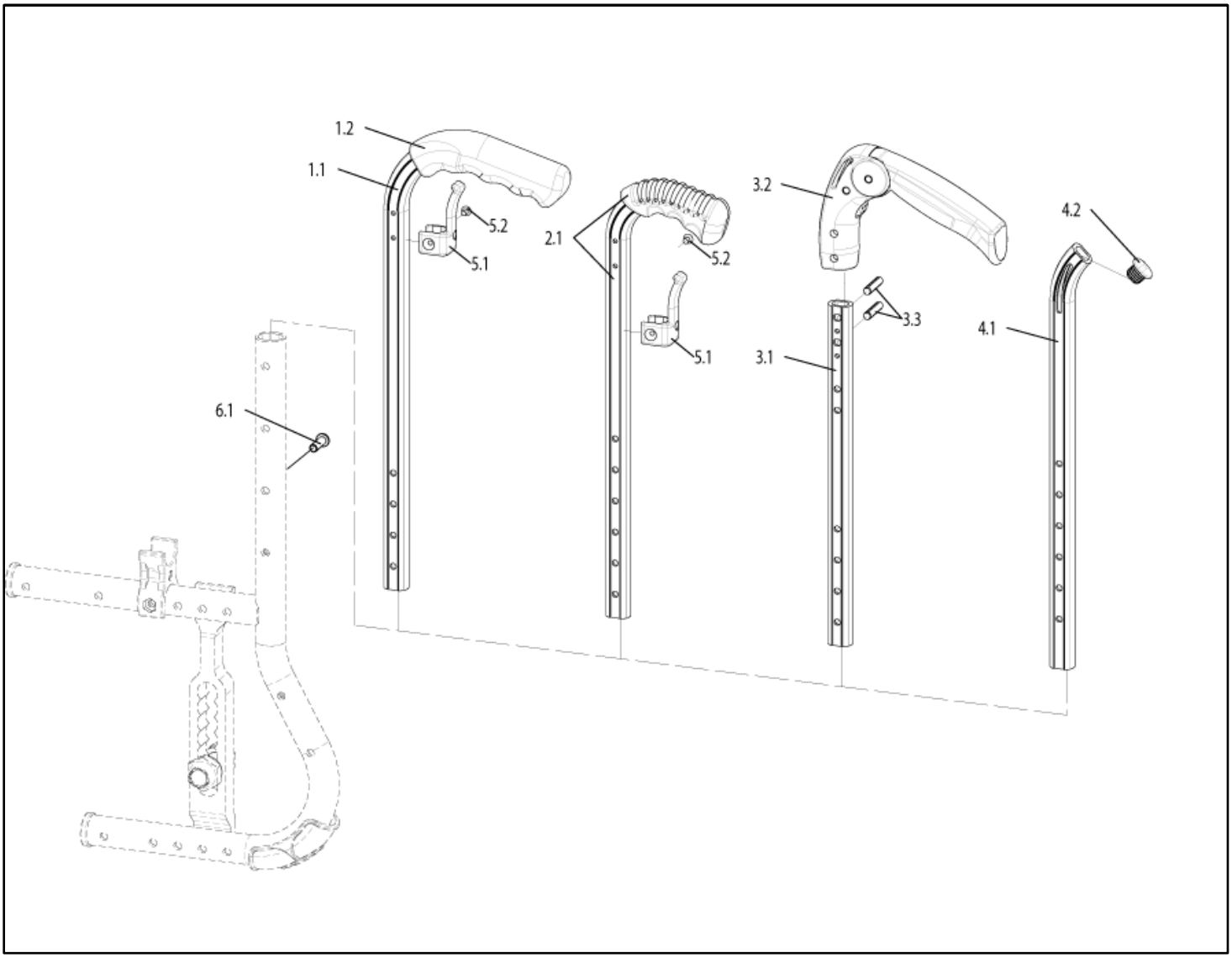

Pos	Itemnumber	Description	Comment
1.1-1.2, 5.1-5.2, 6,1	072423-001	Rigid back tube Long Push Handles BH25	
1.1-1.2, 5.1-5.2, 6,1	072423-002	Rigid back tube Long Push Handles BH30	
1.1-1.2, 5.1-5.2, 6,1	072423-003	Rigid back tube Long Push Handles BH35	
1.1-1.2, 5.1-5.2, 6,1	072423-004	Rigid back tube Long Push Handles BH40	
1.1-1.2, 5.1-5.2, 6,1	072423-005	Rigid back tube Long Push Handles BH45	
1.2	71104052-ET	Grip for back tube (incl. glue)	10 pcs./pack

Back tubes for standard back

Pos	Itemnumber	Description	Comment
-	000050008.01-ET	2 component stickers for handle (small letters)	Pack of 5
2.1, 5.1-5.2, 6,1	072424-001	Back tube with short push handle, complete BH25	
2.1, 5.1-5.2, 6,1	072424-002	Back tube with short push handle, complete BH30	
2.1, 5.1-5.2, 6,1	072424-003	Back tube with short push handle, complete BH35	
2.1, 5.1-5.2, 6,1	072424-004	Back tube with short push handle, complete BH40	
2.1, 5.1-5.2, 6,1	072424-005	Back tube with short push handle, complete BH45	
3.1-3.3, 6,1	072425-001	Back tube with Folding push handle, complete BH30	
3.1-3.3, 6,1	072425-002	Back tube with Folding push handle, complete BH35	
3.1-3.3, 6,1	072425-003	Back tube with Folding push handle, complete BH40	
3.1-3.3, 6,1	072425-004	Back tube with Folding push handle, complete BH45	
4.1-4.2, 6.1	072426-001	Back tube without push handle, complete BH25	
4.1-4.2, 6.1	072426-002	Back tube without push handle, complete BH30	
4.1-4.2, 6.1	072426-003	Back tube without push handle, complete BH35	
4.1-4.2, 6.1	072426-004	Back tube without push handle, complete BH40	
4.1-4.2, 6.1	072426-005	Back tube without push handle, complete BH45	
4.2	760841001-ET	End stoppers for profile tube	Pack of 10
5.1-5.2	760949901	Accessories back upholstery adjustable (gebogener clamp) cpl.	Pair
5.2	000114005-ET	Countersunk screw ST 3,9 x 16 - DIN 7982	Pack of 25
6.1	000102307.01-ET	Button head cap screw M 6 x 20 Torx drive	Pack of 25
-	072423-006	Back tube, STD, rigid, used with drum brake wheel, BH 25 cm	
-	072423-007	Back tube, STD, rigid, used with drum brake wheel, BH 30 cm	
-	072423-008	Back tube, STD, rigid, used with drum brake wheel, BH 35 cm	
-	072423-009	Back tube, STD, rigid, used with drum brake wheel, BH 40 cm	
-	072423-010	Back tube, STD, rigid, used with drum brake wheel, BH 45 cm	
-	072430-005	Back tube, STD, angle adjustable, used with drum brake wheel, BH 30 cm	
-	072430-006	Back tube, STD, angle adjustable, used with drum brake wheel, BH 35 cm	
-	072430-007	Back tube, STD, angle adjustable, used with drum brake wheel, BH 40 cm	
-	072430-008	Back tube, STD, angle adjustable, used with drum brake wheel, BH 45 cm	

Height Adjustable Push Handle

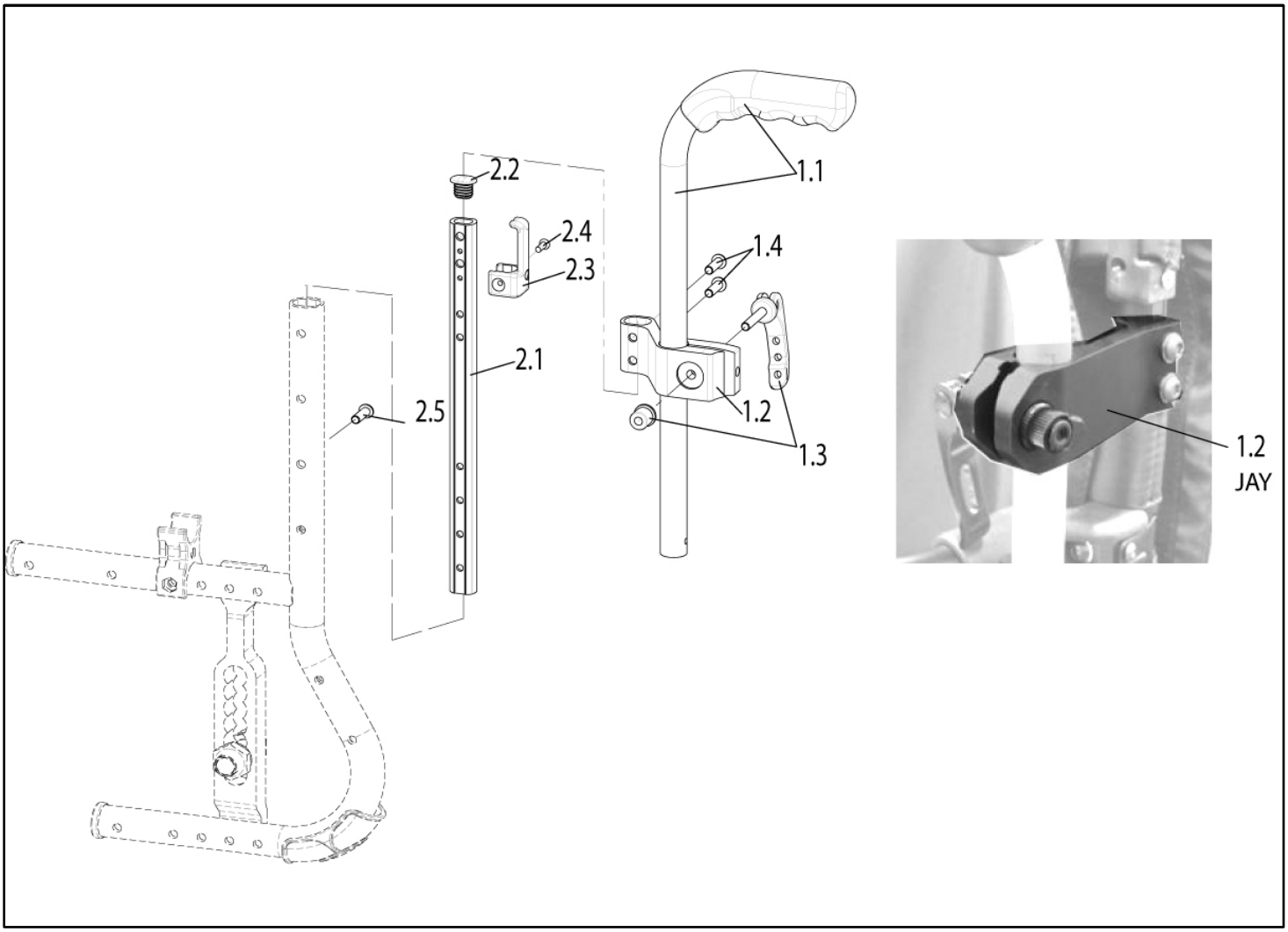

Pos	Itemnumber	Description	Comment
1.1-2.5	072435-001	Height-adjustable push handle and Backtube BH30 used with JAY backrest and autofolding stabilizer bar	LH/RH useable
1.1-2.5	072435-002	Height-adjustable push handle and Backtube BH35 used with JAY backrest and autofolding stabilizer bar	LH/RH useable
1.1-2.5	072435-003	Height-adjustable push handle and Backtube BH40 used with JAY backrest and autofolding stabilizer bar	LH/RH useable
1.1-2.5	072435-004	Height-adjustable push handle and Backtube BH45 used with JAY backrest and autofolding stabilizer bar	LH/RH useable
1.1-2.5	072435-006	Height-adjustable push handle and Backtube BH30 used with standard backrest and angle adjustbale backrest	LH/RH useable
1.1-2.5	072435-007	Height-adjustable push handle and Backtube BH35 used with standard backrest and angle adjustbale backrest	LH/RH useable
1.1-2.5	072435-008	Height-adjustable push handle and Backtube BH40 used with standard backrest and angle adjustbale backrest	LH/RH useable
1.1-2.5	072435-009	Height-adjustable push handle and Backtube BH45 used with standard backrest and angle adjustbale backrest	LH/RH useable

Height Adjustable Push Handle

Pos	Itemnumber	Description	Comment
1.1	000841264	Height-Adjustable push handle, BH 25 - 27.5 cm, black anodized	LH/RH useable, Note: starting with week 16/2012 black anodized
1.1	000841265	Height-adjustable push handle, BH 30 - 37.5 cm, black anodized	LH/RH useable, Note: starting with week 16/2012 black anodized
1.1	000841266	Height-adjustable push handle, BH 40 - 50 cm, black anodized	LH/RH useable, Note: starting with week 16/2012 black anodized
	000 841 268	Height-adjustable push handle used with drum brakes, complete BH: 30 - 37.5 Length approx. 350 mm	
	000 841 269	Height-adjustable push handle used with drum brakes, complete BH: 40 - 47.5 Length approx. 270 mm	
1.2-1.4	065432	Push handle holder with quick tensioner used with JAY backrest and autofolding stabilizer bar complete	Pair
1.2-1.4	051456	Push handle holder with quick tensioner used with standard backrest and angle adjustable backrest complete	LH/RH useable
1.4	000102307.01-ET	Button head cap screw M 6 x 20 Torx drive	Pack of 25
2.1-2.5	072436-001	Backtube and Fitting accessories for back sling BH30	LH/RH useable
2.1-2.5	072436-002	Backtube and Fitting accessories for back sling BH35	LH/RH useable
2.1-2.5	072436-003	Backtube and Fitting accessories for back sling BH40	LH/RH useable
2.1-2.5	072436-004	Backtube and Fitting accessories for back sling BH45	LH/RH useable
2.3-2.4	760949902	Accessories back upholstery adjustable (straight line clamp) cpl.	Pair
2.4	000114005-ET	Countersunk screw ST 3,9 x 16 - DIN 7982	Pack of 25
2.5	000102307.01-ET	Button head cap screw M 6 x 20 Torx drive	Pack of 25

Backrest upholstery

Pos	Itemnumber	Description	Comment
-	072470	Backrest upholstery Nylon, adjustable	
1.1 - 1.3	072472	Backrest upholstery with vented material, adjustable	
1.2	066853-ET	Single back belt	7 pcs./pack
1.3	066440-310	Single back belt, lowermost SW 38 to 50 cm	1 pc./pack
1.3	066440-311	Single back belt, lowermost SW 22 to 36 cm	1 pc./pack

Stabilising Bar

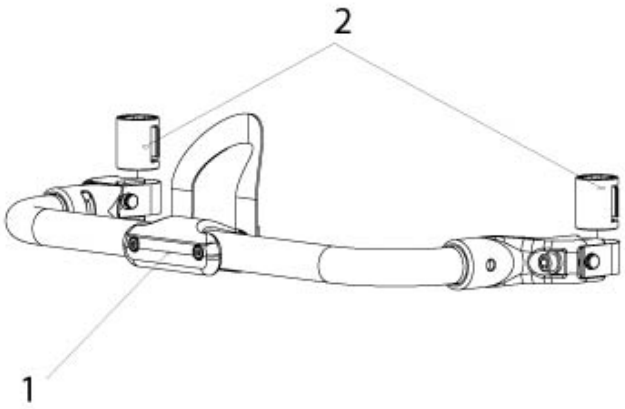

Pos	Itemnumber	Description
1.1	064720-001	Stabilising bar autofolding SW36
1.1	064720-002	Stabilising bar autofolding SW38
1.1	064720-003	Stabilising bar autofolding SW40
1.1	064720-004	Stabilising bar autofolding SW42
1.1	064720-005	Stabilising bar autofolding SW44
1.1	065720-007	Stabilising bar autofolding SW46
1.1	065720-008	Stabilising bar autofolding SW48
1.1	065720-009	Stabilising bar autofolding SW50
1.2	065725	Mountingkit for Stabilisingbar

Headrest with height adjustable push handles

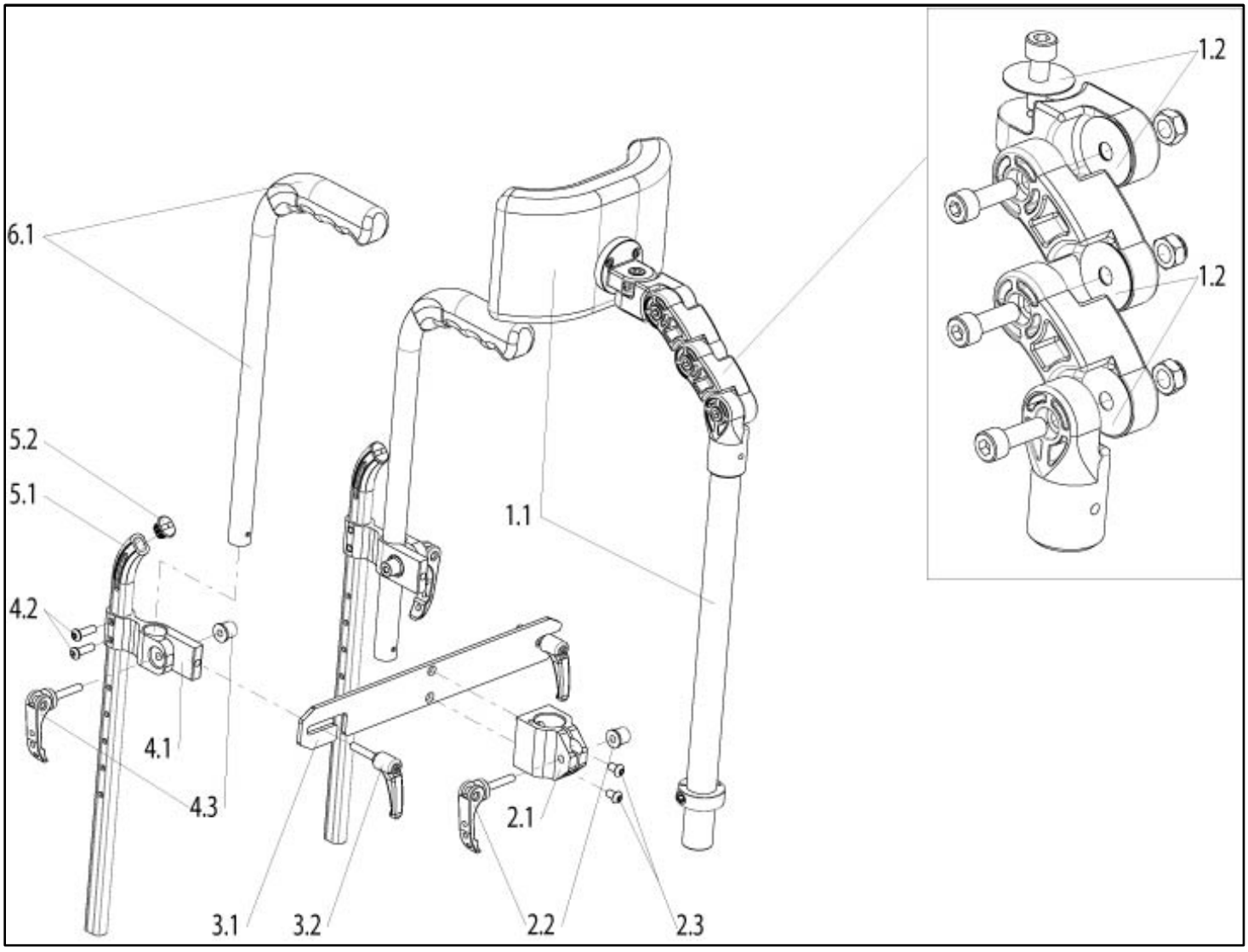

Pos	Itemnumber	Description	Comment
1.1 - 1.2	306001.32100	Head rest padded - medium - (20 x 10 cm)	
1.1 - 1.2	306001.32101	Head rest padded - large - (23 x 11 cm)	
1.2	84303002-ET	Friction washer used with head rest hinge	10 pcs./pack
2.1-2.3	84310034	Head rest adapter with quick release lever	
2.2, 4.3	000233027	Rapid tensioner	
2.3	000102308.01-ET	Lens head screw M 6 x 12, Torx	25 pcs./pack
3.1-4.3	84310035-000	Stabilizer bar (used as head rest adaptor)	
3.2	000233001-ET	Rapid tensioner stbailizer bar	5 pcs./pack
4.1-4.3	84310036	Height adj. push handle adapter with quick release lever cpl.	LH/RH useable
4.2	000102307.01-ET	Lens head screw M 6 x 20, Torx	25 St./Pkg.
5.1-5.2	84310037-001	Backrest tube for backrest w/o push handle and backrest with height adj. push handle used with BH 25 cm	LH/RH useable

Headrest with height adjustable push handles

Pos	Itemnumber	Description	Comment
5.1-5.2	84310037-002	Backrest tube for backrest w/o push handle and backrest with height adj. push handle used with BH 30 cm	LH/RH useable
5.1-5.2	84310037-003	Backrest tube for backrest w/o push handle and backrest with height adj. push handle used with BH 35 cm	LH/RH useable
5.1-5.2	84310037-004	Backrest tube for backrest w/o push handle and backrest with height adj. push handle used with BH 40 cm	LH/RH useable
-	84310032-001	Backrest tube for angle adj. backrest w/o push handle and backrest with height adj. push handle used with BH 25 cm	LH/RH useable
-	84310032-002	Backrest tube for angle adj. backrest w/o push handle and backrest with height adj. push handle used with BH 30 cm	LH/RH useable
-	84310032-003	Backrest tube for angle adj. backrest w/o push handle and backrest with height adj. push handle used with BH 35 cm	LH/RH useable
-	84310032-004	Backrest tube for angle adj. backrest w/o push handle and backrest with height adj. push handle used with BH 40 cm	LH/RH useable
5.2	760841001-ET	End plug for back tube	10 pcs./pack
6.1	000841264	Height-Adjustable push handle, BH 25 - 27.5 cm, black anodized	LH/RH useable, Note: starting with week 16/2012 black anodized
6.1	000841265	Height-adjustable push handle, BH 30 - 37.5 cm, black anodized	LH/RH useable, Note: starting with week 16/2012 black anodized
6.1	000841266	Height-adjustable push handle, BH 40 - 50 cm, black anodized	LH/RH useable, Note: starting with week 16/2012 black anodized
-	000281007-ET	Hanlde for push handle, height-adjustable with drum brake	6 pcs./pack
-	71104051-002-ET	Handgrip with glue	10 pcs/pack

Backrest, STD with head rest for SW46-50

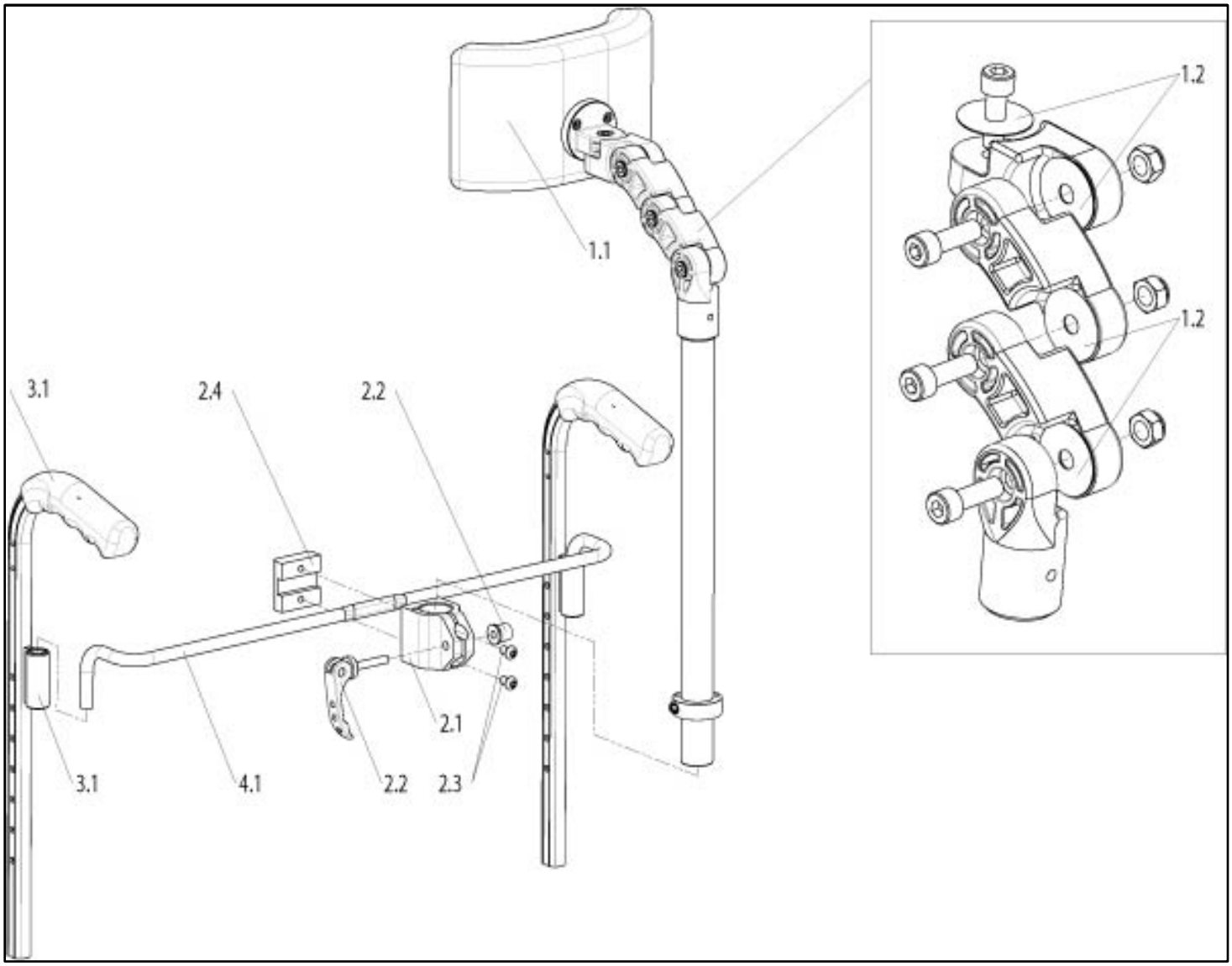

Pos	Itemnumber	Description	Comment
1.1-4.1	000 841 500	Headrest, complete	
1.1	306001.32100	Head rest padded - medium - (20 x 10 cm)	
1.1	306001.32101	Head rest padded - large - (23 x 11 cm)	
2.1-2.4,4.1	000 841 504.01	Headrest bracket, complete for metric tube (from CW 10)	
4.1	000 841 510	Receiver tube for headrest	
2.2	000 233 027	Quick tension lever	
2.3	000 102 040-ET	Saucer head screw M 6 x 16 with internal hex	Pack of 25
	000 604 280	Tool kit for headrest	
3.1	760 841 049.01	Back tube for headrest, complete BH: 30	
3.1	760 841 049.02	Back tube for headrest, complete BH: 35	
3.1	760 841 049.03	Back tube for headrest, complete BH: 40	

Backrest, STD with head rest for SW46-50

Pos	Itemnumber	Description	Comment
3.1	760 841 049.04	Back tube for headrest, complete BH: 45	
3.1	760 841 049.11	Back tube for headrest, complete, for angle-adjustable backrest BH: 30	
3.1	760 841 049.12	Back tube for headrest, complete, for angle-adjustable backrest BH: 35	
3.1	760 841 049.13	Back tube for headrest, complete, for angle-adjustable backrest BH: 40	
3.1	760 841 049.14	Back tube for headrest, complete, for angle-adjustable backrest BH: 45	
3.1	760 841 045.03	Back tube for headrest, complete with 5° front-facing lumbar support BH: 40	
3.1	760 841 045.04	Back tube for headrest, complete with 5° front-facing lumbar support BH: 45	
3.1	760 841 046.02	Back tube for headrest, complete with 5° rear-facing lumbar support BH: 35	
3.1	760 841 046.03	Back tube for headrest, complete with 5° rear-facing lumbar support BH: 40	
3.1	760 841 046.04	Back tube for headrest, complete with 5° rear-facing lumbar support BH: 45	
3.1	760 841 045.13	Back tube for headrest, complete with 5° front-facing lumbar support, angle-adjustable backrest BH: 40	
3.1	760 841 045.14	Back tube for headrest, complete with 5° front-facing lumbar support, angle-adjustable backrest BH: 45	
3.1	760 841 046.12	Back tube for headrest, complete with 5° rear-facing lumbar support, angle-adjustable backrest BH: 35	
3.1	760 841 046.13	Back tube for headrest, complete with 5° rear-facing lumbar support, angle-adjustable backrest BH: 40	
3.1	760 841 046.14	Back tube for headrest, complete with 5° rear-facing lumbar support, angle-adjustable backrest BH: 45	
3.1	760 841 605.01	Back tube (drum brakes) for headrest, complete BH: 30	
3.1	760 841 605.02	Back tube (drum brakes) for headrest, complete BH: 35	
3.1	760 841 605.03	Back tube (drum brakes) for headrest, complete BH: 40	
3.1	760 841 605.04	Back tube (drum brakes) for headrest, complete BH: 45	
3.1	760 841 605.11	Back tube (drum brakes) for headrest, complete for angle-adjustable backrest BH: 30	
3.1	760 841 605.12	Back tube (drum brakes) for headrest, complete for angle-adjustable backrest BH: 35	
3.1	760 841 605.13	Back tube (drum brakes) for headrest, complete for angle-adjustable backrest BH: 40	
3.1	760 841 605.14	Back tube (drum brakes) for headrest, complete for angle-adjustable backrest BH: 45	
3.1	760 841 590.03	Back tube (drum brakes) for headrest, complete with 5° front-facing lumbar support BH: 40	
3.1	760 841 590.04	Back tube (drum brakes) for headrest, complete with 5° front-facing lumbar support BH: 45	
3.1	760 841 591.02	Back tube (drum brakes) for headrest, complete with 5° rear-facing lumbar support BH: 35	
3.1	760 841 591.03	Back tube (drum brakes) for headrest, complete with 5° rear-facing lumbar support BH: 40	

Pos	Itemnumber	Description	Comment
3.1	760 841 591.04	Back tube (drum brakes) for headrest, complete with 5° rear-facing lumbar support BH: 45	
3.1	760 841 590.13	Back tube (drum brakes) for headrest, complete with 5° front-facing lumbar support, angle-adjustable backrest BH: 40	
3.1	760 841 590.14	Back tube (drum brakes) for headrest, complete with 5° front-facing lumbar support, angle-adjustable backrest BH: 45	
3.1	760 841 591.12	Back tube (drum brakes) for headrest, complete with 5° rear-facing lumbar support, angle-adjustable backrest BH: 35	
3.1	760 841 591.13	Back tube (drum brakes) for headrest, complete with 5° rear-facing lumbar support, angle-adjustable backrest 40	
3.1	760 841 591.14	Back tube (drum brakes) for headrest, complete with 5° rear-facing lumbar support, angle-adjustable backrest 45	
-	000 050 008.01-ET	2 component stickers for handle (small letters)	Pack of 5
1.2	84303002-ET	FRICTION WASHER USED WITH HEAD REST HINGE	Pack of 10
INSERT		Part INSERT	

Seat- and Backslings are customized manufactured and excluded from replacements!

Headrest with height adjustable push handles for SW46-50

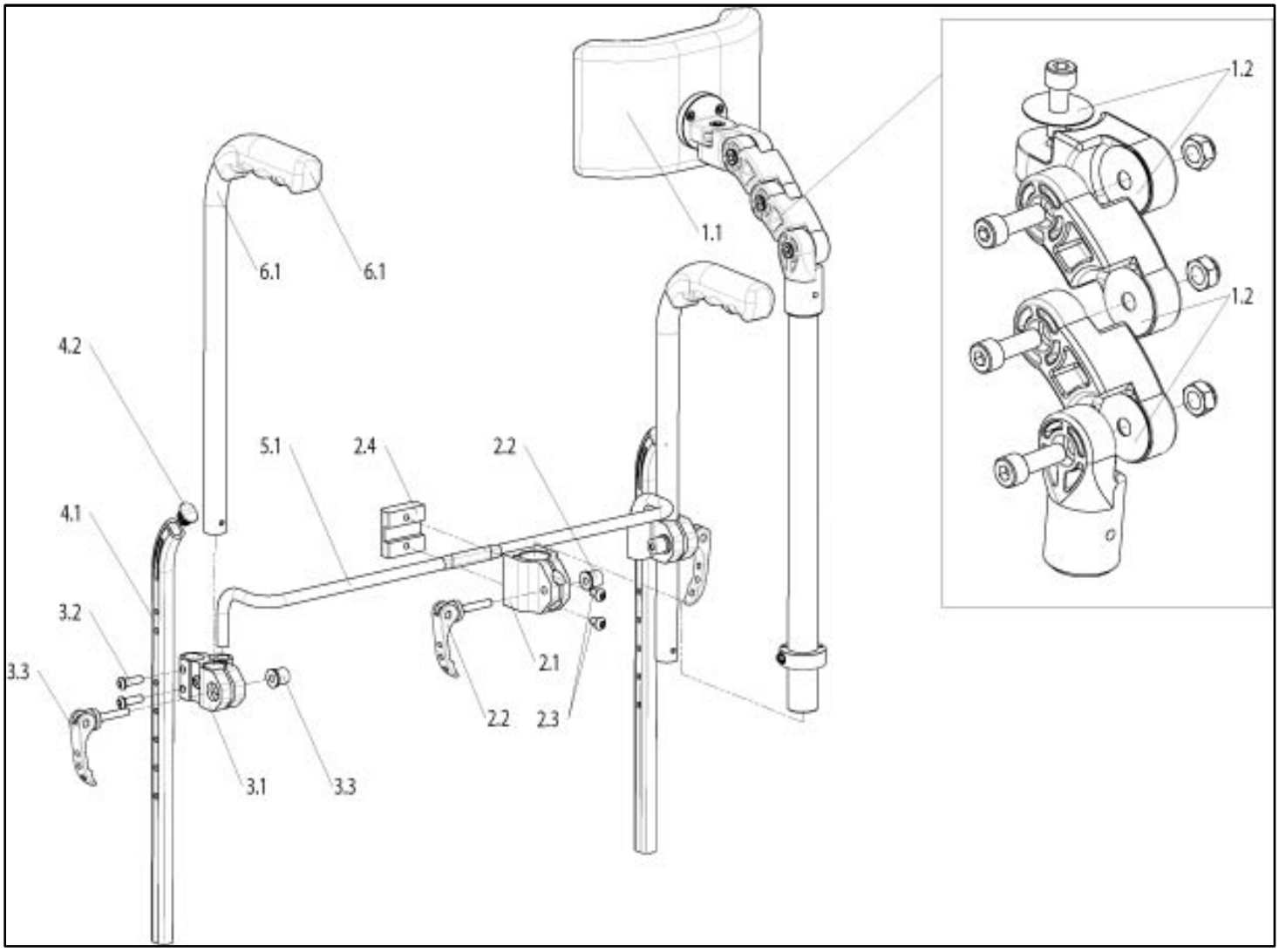

Pos	Itemnumber	Description	Comment
1.1 - 1.2	306001.32100	Head rest padded - medium - (20 x 10 cm)	
1.1 - 1.2	306001.32101	Head rest padded - large - (23 x 11 cm)	
1.2	84303002-ET	Friction washer used with head rest hinge	10 pcs./pack
2.1-2.3	84310034	Head rest adapter with quick release lever	
2.2, 3.3	000233027	Rapid tensioner	
2.3	000102308.01-ET	Lens head screw M 6 x 12, Torx	25 pcs./pack
3.1-3.3	753841056	Height adj. push handle adapter with quick release lever cpl.	LH/RH useable
3.2	000102311.01-ET	Lens head screw M 6 x 27, Torx	25 St./Pkg.
4.1-4-2	84310037-001	Backrest tube for backrest w/o push handle and backrest with height adj. push handle used with BH 25 cm	LH/RH useable
4.1-4-2	84310037-002	Backrest tube for backrest w/o push handle and backrest with height adj. push handle used with BH 30 cm	LH/RH useable
4.1-4-2	84310037-003	Backrest tube for backrest w/o push handle and backrest with height adj. push handle used with BH 35 cm	LH/RH useable

Pos	Itemnumber	Description	Comment
4.1-4-2	84310037-004	Backrest tube for backrest w/o push handle and backrest with height adj. push handle used with BH 40 cm	LH/RH useable
-	84310032-001	Backrest tube for angle adj. backrest w/o push handle and backrest with height adj. push handle used with BH 25 cm	LH/RH useable
-	84310032-002	Backrest tube for angle adj. backrest w/o push handle and backrest with height adj. push handle used with BH 30 cm	LH/RH useable
-	84310032-003	Backrest tube for angle adj. backrest w/o push handle and backrest with height adj. push handle used with BH 35 cm	LH/RH useable
-	84310032-004	Backrest tube for angle adj. backrest w/o push handle and backrest with height adj. push handle used with BH 40 cm	LH/RH useable
4.2	760841001-ET	End plug for back tube	10 pcs./pack
6.1	000841264	Height-Adjustable push handle, BH 25 - 27.5 cm, black anodized	LH/RH useable, Note: starting with week 16/2012 black anodized
6.1	000841265	Height-adjustable push handle, BH 30 - 37.5 cm, black anodized	LH/RH useable, Note: starting with week 16/2012 black anodized
6.1	000841266	Height-adjustable push handle, BH 40 - 50 cm, black anodized	LH/RH useable, Note: starting with week 16/2012 black anodized
-	000281007-ET	Hanlde for push handle, height-adjustable with drum brake	6 pcs./pack
-	71104051-002-ET	Handgrip with glue	10 pcs/pack
2.1-2.4,5.1	000841517.01	Headrest bracket, used with metric tube, complete	used with heigth adj. push handles
5.1	000841516	Receiver tube for headrest	

Sideguard, aluminium with fender

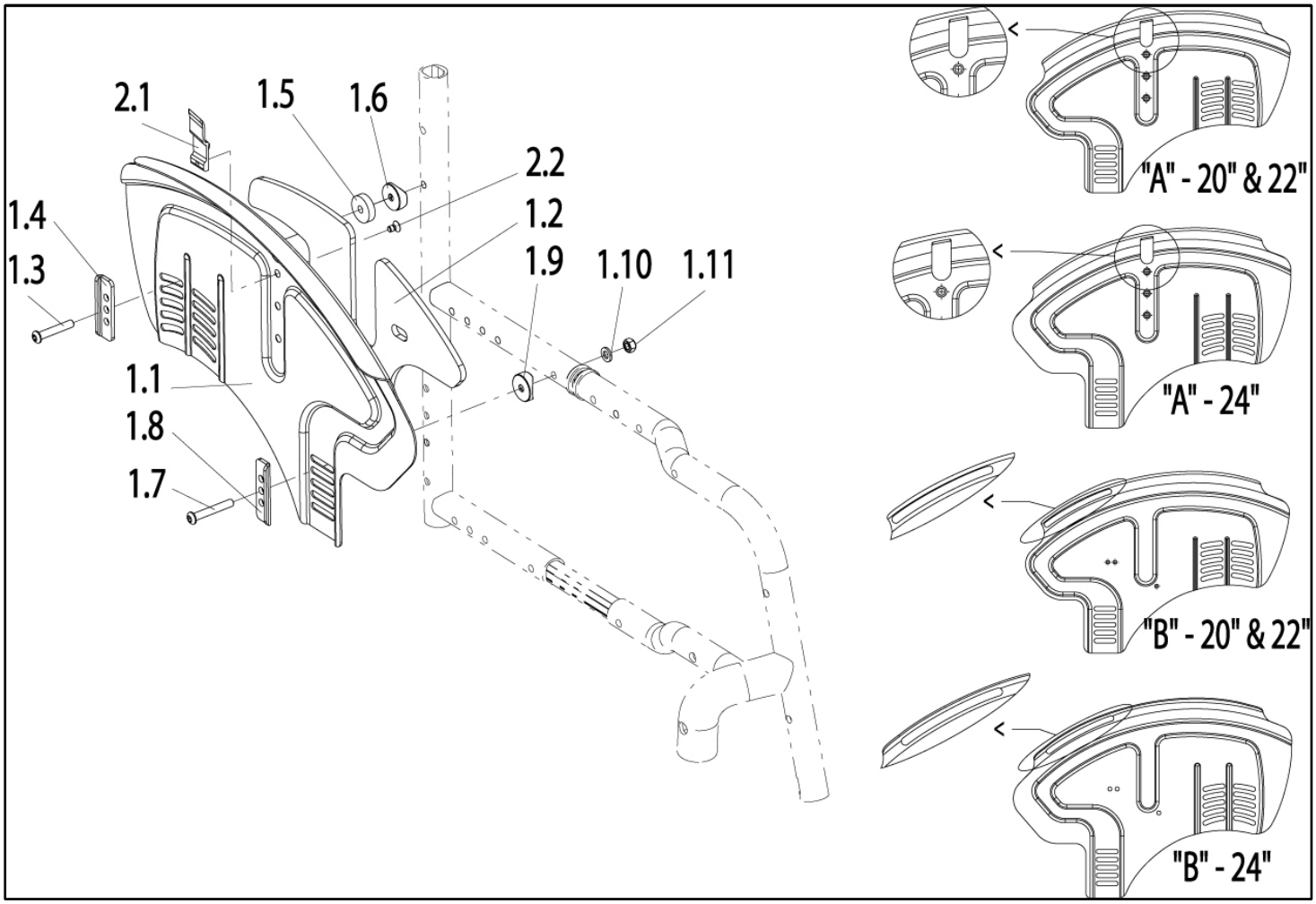

Pos	Itemnumber	Description	Comment
-	84310039-000	Fender sideguard for 20 inch / 22 inch with cold protection (version - A -) cpl.	Pair
-	84310039-002	Fender sideguard for 20 inch / 22 inch with cold protection (Version - A -) cpl.	RH
-	84310039-001	Fender sideguard for 20 inch / 22 inch with cold protection (Version - A -) cpl.	LH
-	84310040-000	Fender sideguard for 20 inch / 22 inch with cold protection (Version - B - used with Safari brake) cpl.	Pair
-	84310040-002	Fender sideguard for 20 inch / 22 inch with cold protection (Version - B - used with Safari brake) cpl.	RH
-	84310040-001	Fender sideguard for 20 inch / 22 inch with cold protection (Version - B - used with Safari brake) cpl.	LH
-	84310041-000	Fender sideguard for 24 inch with cold protection (Version - A -) cpl.	Pair
1.1-1.11	84310041-002	Fender sideguard for 24 inch with cold protection (Version - A -) cpl.	RH
-	84310041-001	Fender sideguard for 24 inch with cold protection (Version - A -) cpl.	LH
-	84310042-000	Fender sideguard for 24 inch with cold protection (Version - B - used with Safari brake) cpl.	Pair

Pos	Itemnumber	Description	Comment
-	84310042-002	Fender sideguard for 24 inch with could protection (Version - B - used with Safari brake) cpl.	RH
-	84310042-001	Fender sideguard for 24 inch with could protection (Version - B - used with Safari brake) cpl.	LH
1.3-1.11	84310066	Fitting accessories for sideguard	Pair
1.2	062440	Cold protection used with sideguard version -A- and -B-	Pair
1.3	000102309.01-ET	Button head cap screw M 6 x 50 Torx drive	25 pcs./pack
1.5	622842003-ET	Washer 23 x 6.2 x 6 POM, black	4 pcs./pack
1.6	066947-001-ET	Washer M6 DIN9021	10 pcs./pack
1.7	000102308.01-ET	Button head screw M 6 x 12 Torx drive	25 pcs./pack
1.10	000130007-ET	Washer A 6,4 - DIN 125	25 pcs./pack
1.11	000128007-ET	Hex nut M 6 DIN 985	25 pcs./pack
2.1-2.2	062441	Cover for side guard without arm pad	Pair
2.2	000104044-ET	Countersunk head screw M 5 x 8 DIN 965	25 pcs./pack
1.8	000102311.01-ET	Lense screw M6x27, Torx	
1.9	072401	Bracket for Alu Sideguard	
1.2-2.0	84604001	Mounting Kit kpl. for Sideguard (1Side)	

Single Post Sideguard with Armpad

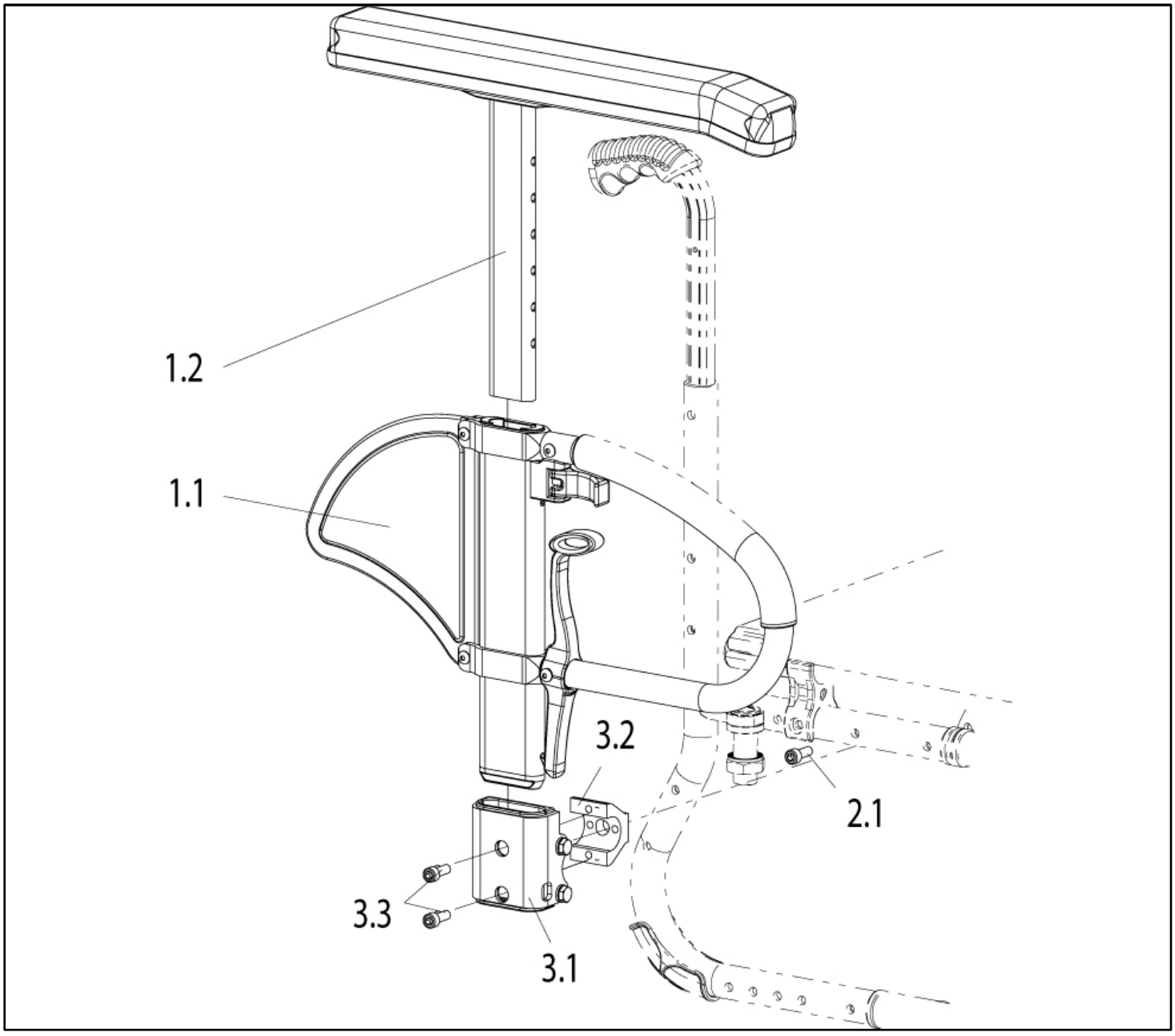

Pos	Itemnumber	Description	Comment
1.1-3.3	072447-001	Single Post Sideguard with Armpad large (36 cm) and Fixation Bracket cpl.	Pair
1.1-3.3	072448-001	Single Post Sideguard with Armpad large (36 cm) and Fixation Bracket cpl.	can be used right & left
1.1-3.3	072447-002	Single Post Sideguard with Armpad short (25 cm) and Fixation Bracket cpl.	Pair
1.1-3.3	072448-002	Single Post Sideguard with Armpad short (25 cm) and Fixation Bracket cpl.	can be used right & left
1.2	072460-001	Armpad short cpl.	can be used right & left

Pos	Itemnumber	Description	Comment
1.2	072460-002	Armpad large cpl.	can be used right & left
2.1-3.3	072450	Fixation Bracket cpl.	can be used right & left
3.2	760861002	Bracket for brake	
3.3	058900-003-ET	Socket head screw M 6 x 16 - DIN 912	Pack of 25
	000102231-ET	Set screw M 6 x 10 DIN 551	25 Pcs.

Plastic Sideguard, detachable

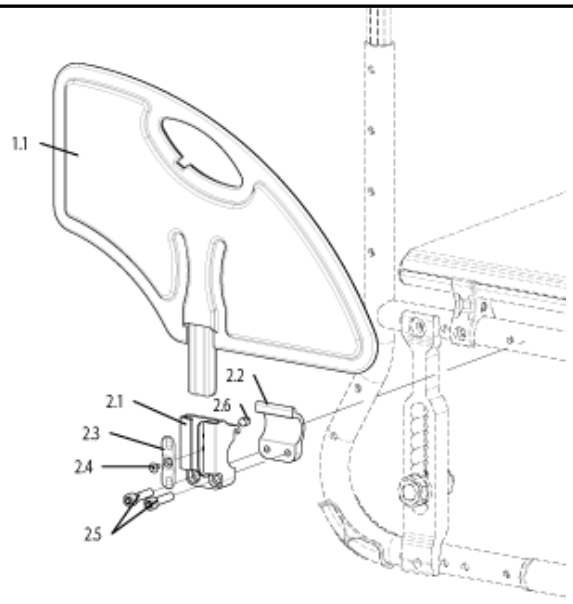

Pos	Itemnumber	Description	Comment
1.1-2.6	072444	Plastic Sideguard regular, detachable with Fixation Bracket cpl.	Pair
1.1-2.6	072445	Plastic Sideguard regular, detachable with Fixation Bracket cpl.	can be used right & left
1.1	104164-001	Quickie Sidegurad plastic, removeable	can be used right & left
2.1-2.6	072446	Fixation Bracket for Plastic Sideguard cpl.	
2.5	058900-005-ET	Socket button head screw M 6 x 25 - DIN 912	Pack of 25

Single post tool height adjustable armrest

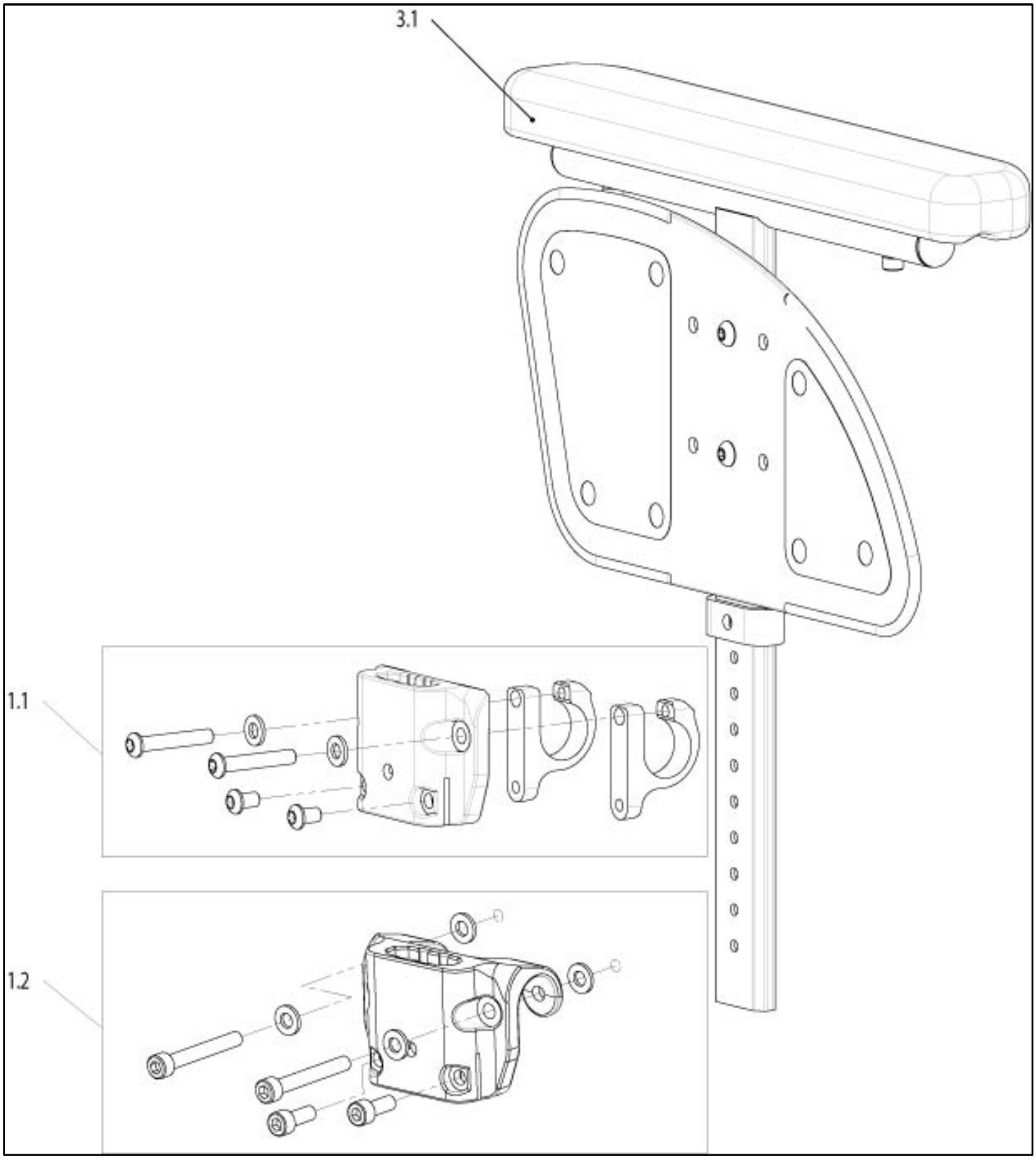

Pos	Itemnumber	Description	Comment
3.1	067870-001	Tool height adjustable armrest	left

Single post tool height adjustable armrest

Pos	Itemnumber	Description	Comment
3.1	067870-002	Tool height adjustable armrest	right
1.2		Bracket for Sideguard tool height adjustable cpl.	(for Front frame FF105/95°, FF95° with Inset, SA, FF105° abu SD44-46)
1.1		Bracket for Sideguard tool height adjustable cpl.	(for Front frame FF105° abu SD32-42)

Desk sideguard

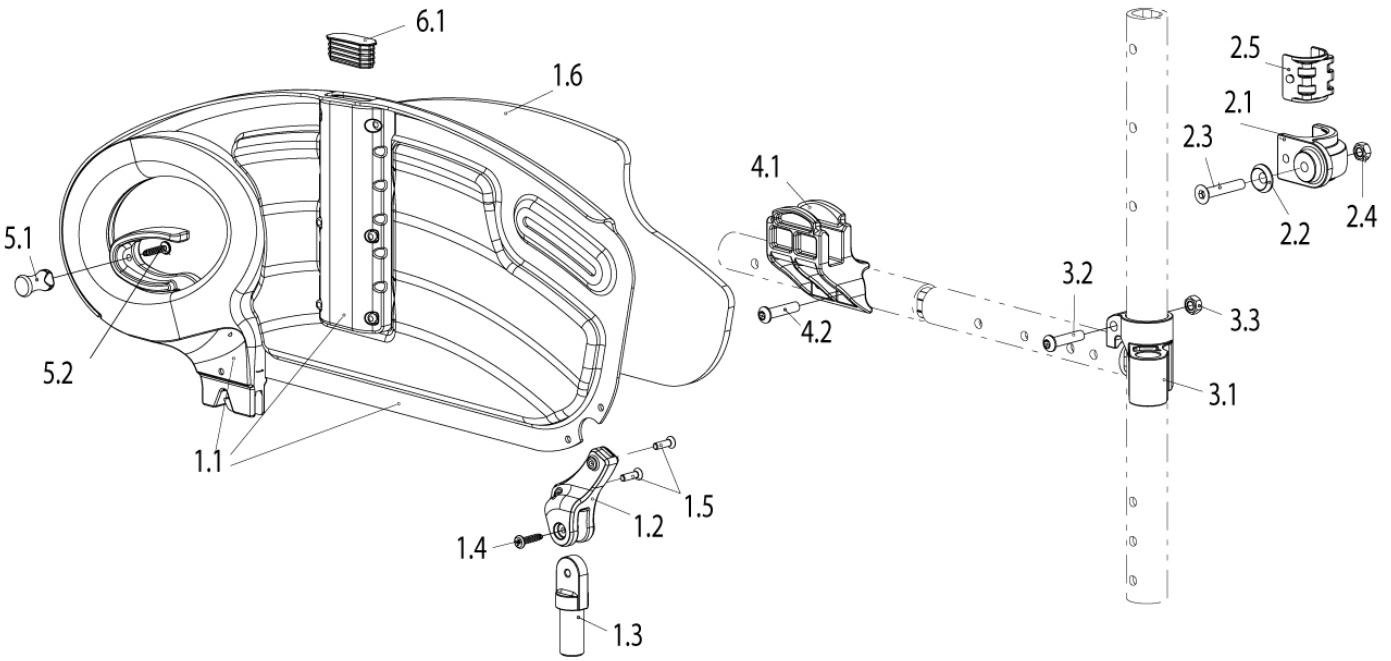

Pos	Itemnumber	Description	Comment
1.1-4.1	71104033-001	Desk sideguard complete (standard and angle adjustable backrest)	LH
1.1-4.1	71104033-002	Desk sideguard complete (standard and angle adjustable backrest)	RH
1.1-4.1	71104033-003	Desk sideguard complete (standard and angle adjustable backrest)	pair
1.1-1.6	71104043-001	Desk sideguard plate with hinge (w/o cold protection)	LH
1.1-1.6	71104043-002	Desk sideguard plate with hinge (w/o cold protection)	RH
1.2-1.5	71104035-001	Rear hinge complete	LH
1.2-1.5	71104035-002	Rear hinge complete	RH
1.5	000104139-ET	Countersunk head screw for plastic - D4x16 - A2	Pack of 25
1.6	71104032-001	Cold protection	LH
1.6	71104032-002	Cold protection	RH
2.1-2.5	71104036-002	Saddle used with desk side guard, rear, frame tube diameter d = 23 mm (standard and angle adj. backrest)	
2.2	000138017-ET	Countersunk washer for M 6	Pack of 25
2.3	000104073-ET	Countersunk head screw DIN 7991 - M6 x 35 - A2-70	Pack of 25
2.4	000128007-ET	Hex nut M 6, DIN 985	Pack of 25
3.1-3.3	760742054	Hinge receiver back tube cpl. (used with tube diameter d = 23 mm)	LH
3.1-3.3	760842054	Hinge receiver back tube cpl. (used with tube diameter d = 23 mm)	RH
3.2	000102311.01-ET	Lens head screw M 6 x 27 with Torx drive	Pack of 25
3.3	000128007-ET	Hex nut M 6, DIN 985	Pack of 25

Desk sideguard

Pos	Itemnumber	Description	Comment
4.1-4.2	71104038-001	Side guard receiver, front cpl.	LH
4.1-4.2	71104038-002	Side guard receiver, front cpl.	RH
4.1	000102311.01-ET	Lens head screw M 6x27 with Torx drive	Pack of 25
5.1-5.2	054493-010	Tetra handle bar used with desk side guard	
6.1	054430	Cap used with desk side guard	
-	000102223	Set screw M6x5 - Poly	10 pcs./pack

Armpad for Desk Sideguard

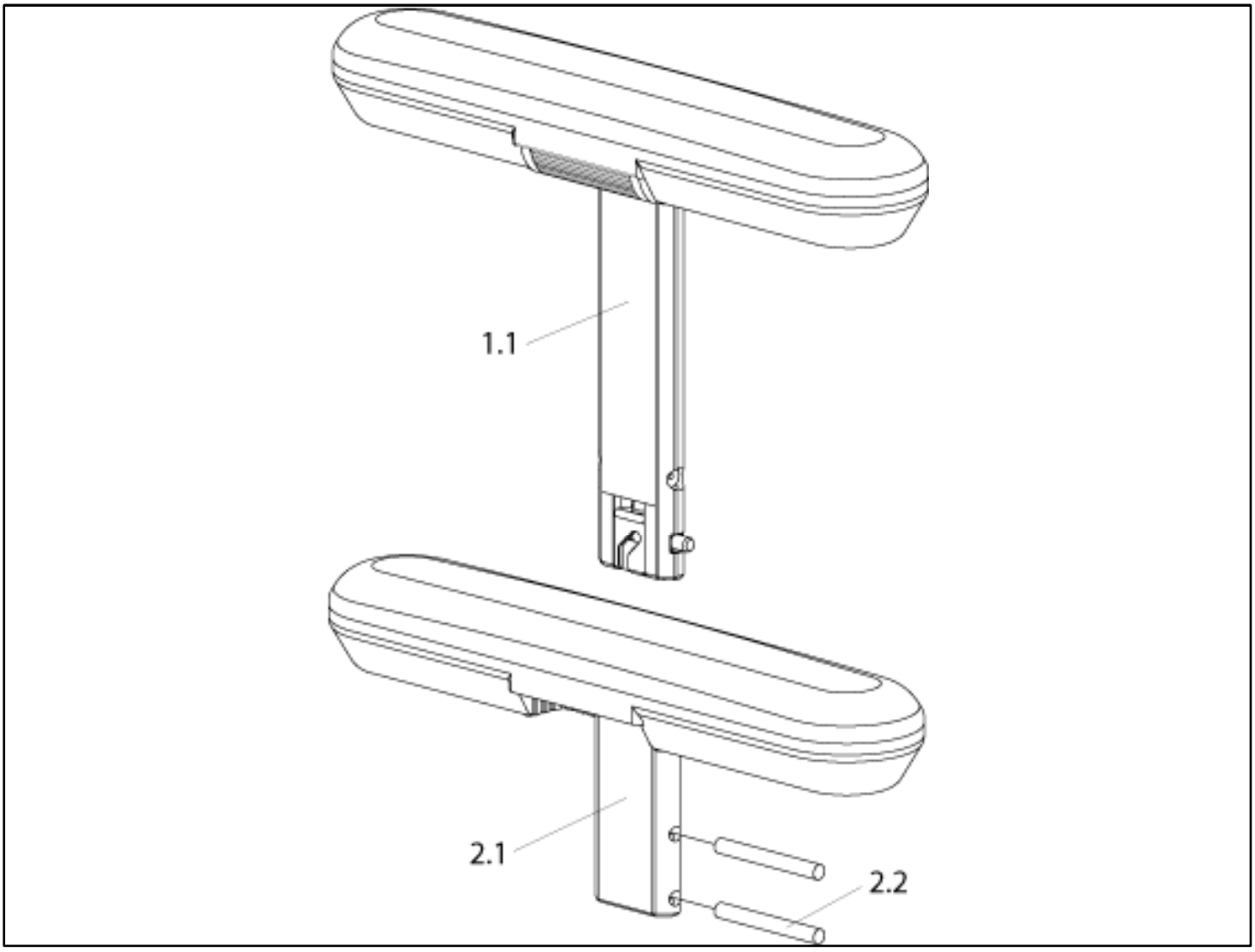

Pos	Itemnumber	Description	Comment
1.1	054449-001	Short armpad, height-adjustable, complete	Pair
1.1	054449	Short armpad, height-adjustable, complete	can be used right and left
1.1	054449-002	Long armpad, height-adjustable, complete	Pair
1.1	054449-003	Long armpad, height-adjustable, complete	right
1.1	054449-004	Long armpad, height-adjustable, complete	left
2.1-2.2	054428-001	Short armpad, fixed, complete	Pair
2.1-2.2	054428-007	Short armpad, fixed, complete	can be used right and left
2.1-2.2	054428-002	Long armpad, fixed, complete	Pair
2.1-2.2	054428-003	Long armpad, fixed, complete	right
2.1-2.2	054428-005	Long armpad, fixed, complete	left
2.2	000156014-ET	split pin 5x45	10 Pce/Pg.

Armrest height adjustable, left/right

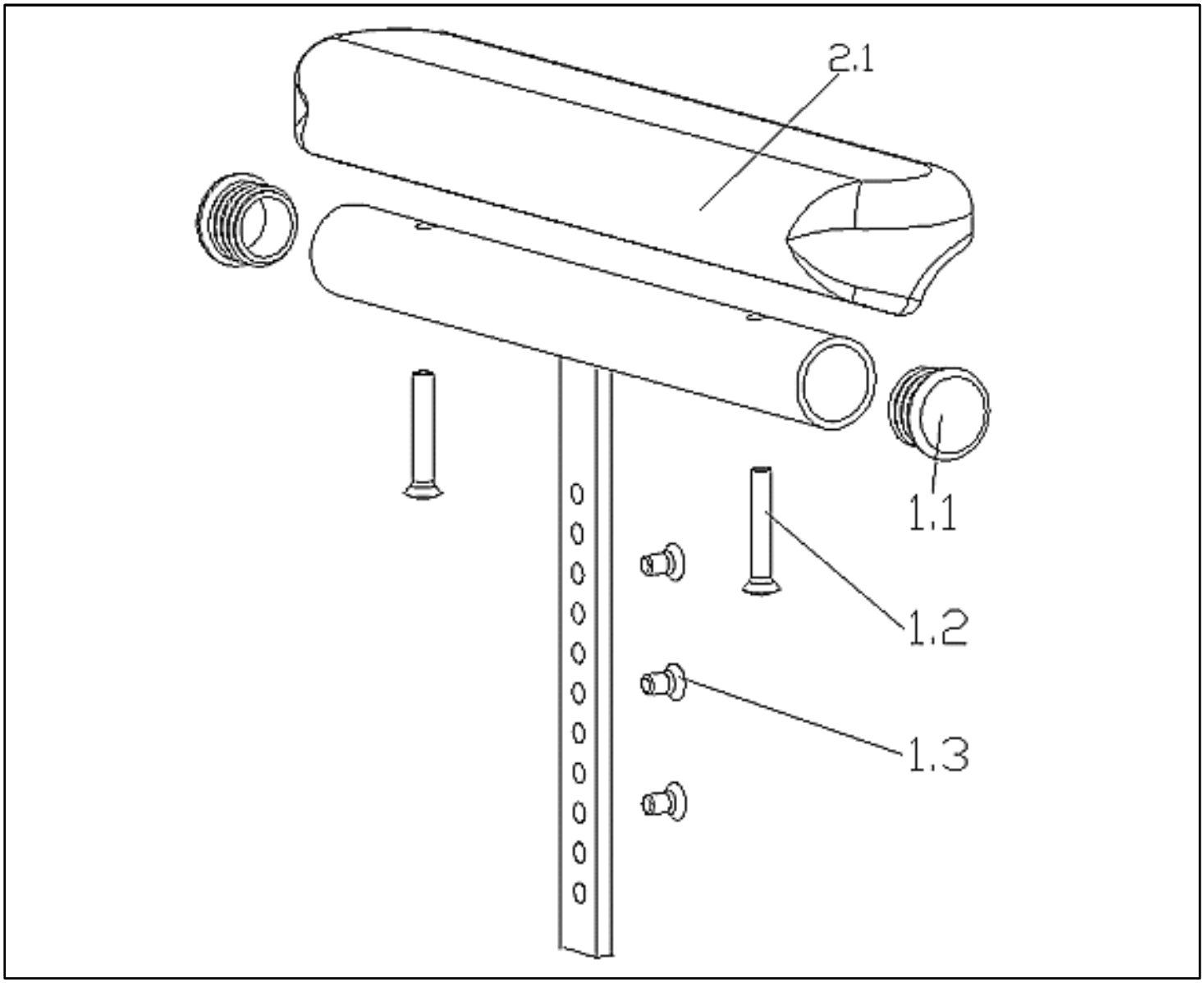

Pos	Itemnumber	Description	Comment
1.1-2.1	840842055	Armrest - height-adjustable, complete. Is screwed onto the sideguard	Pc for use on left and right side
1.2, 2.1	840842056	Arm padding, short, for aluminium sideguard, complete. Is screwed onto the sideguard.	
1.1	000282061-ET	Black laminated cap	Pack of 10
1.2	000104082-ET	Lens head screw M 5 x 30 DIN 966	Pack of 10
1.3	000104044-ET	Screw M 5 x 8 DIN 965	Pack of 25

Carbon Sideguard with Fender & Aluminium Sideguard without Fender

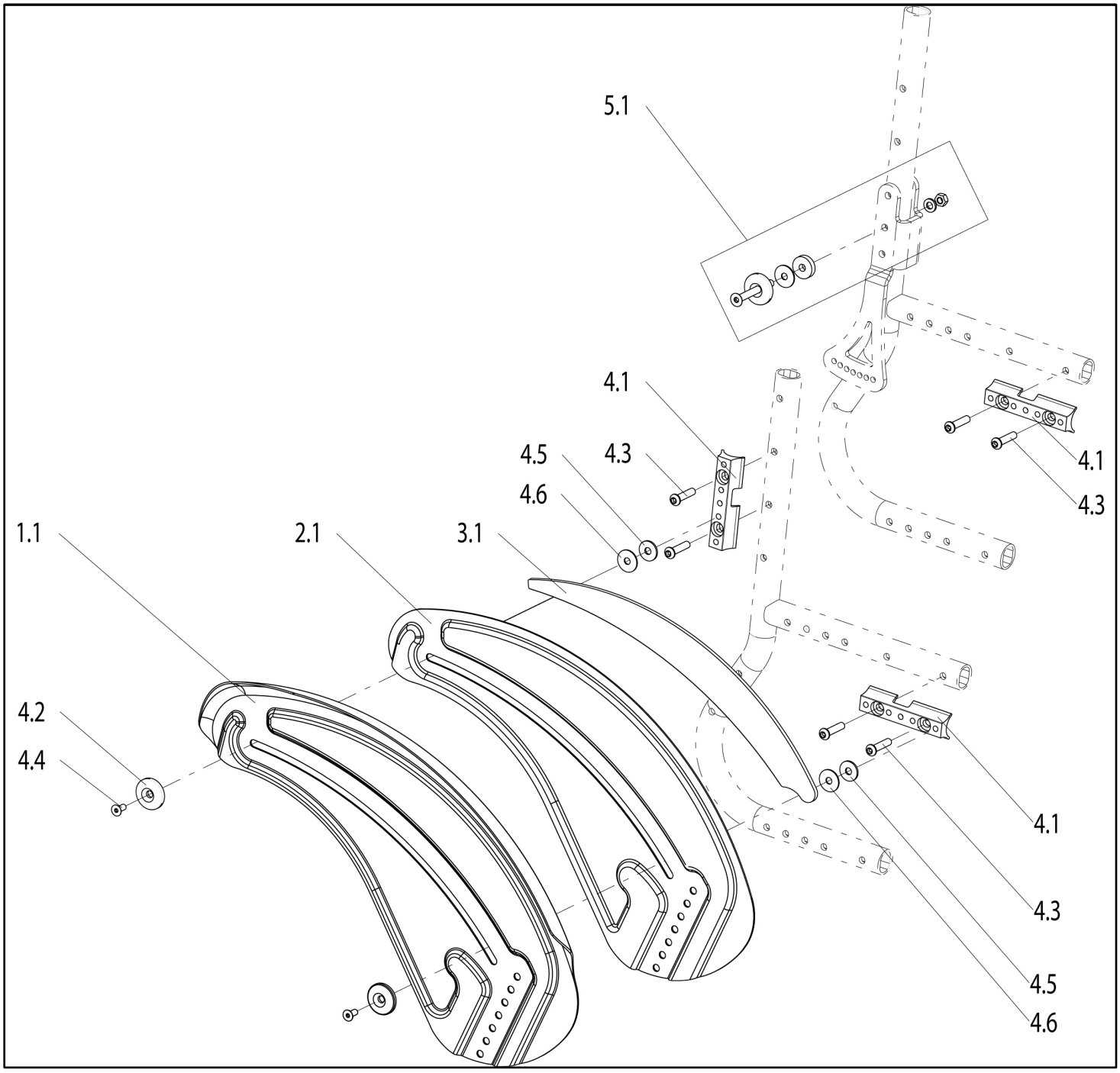

Pos	Itemnumber	Description	Comment
1.1,3.1,4.1-4.4	71104044-001	Carbon Sideguard with Fender and cold Protection complete	Pair
1.1,3.1,4.1-4.4	71104044-002	Carbon Sideguard with Fender and cold Protection complete	left
1.1,3.1,4.1-4.4	71104044-003	Carbon Sideguard with Fender and cold Protection complete	right
1.1	066943-001	Carbon Sideguard powder coated	left
1.1	066943-002	Carbon Sideguard powder coated	right

Carbon Sideguard with Fender & Aluminium Sideguard without Fender

Pos	Itemnumber	Description	Comment
2.1,3.1,4.1-4.4	072440	Aluminum Sideguard with cold Protection complete	Pair
2.1,3.1,4.1-4.4	072441	Aluminum Sideguard with cold Protection complete	left
2.1,3.1,4.1-4.4	072442	Aluminum Sideguard with cold Protection complete	right
2.1	072463	Aluminium Sideguard powder coated	left
2.1	072464	Aluminium Sideguard powder coated	right
3.1	066435-001	cold protection	left
3.1	066435-002	cold protection	right
4.1-4.4	072443	Fitting accessories for Sideguard	
4.2	066458-ET	Rosette for sideguard	10 pcs./pack
4.3	000102311.01-ET	Oval-head screw M 6 x 27 with Torx drive	25 pcs./pack
4.4	066902-001-ET	Counter sunk screw M 6 x 16 - DIN 7991	25 pcs./pack
5.1	07204005	Mounting Kit for Sideguard Mounting low (alu and carbon sidegaurd) with angle adjustable back	

Cross Brace

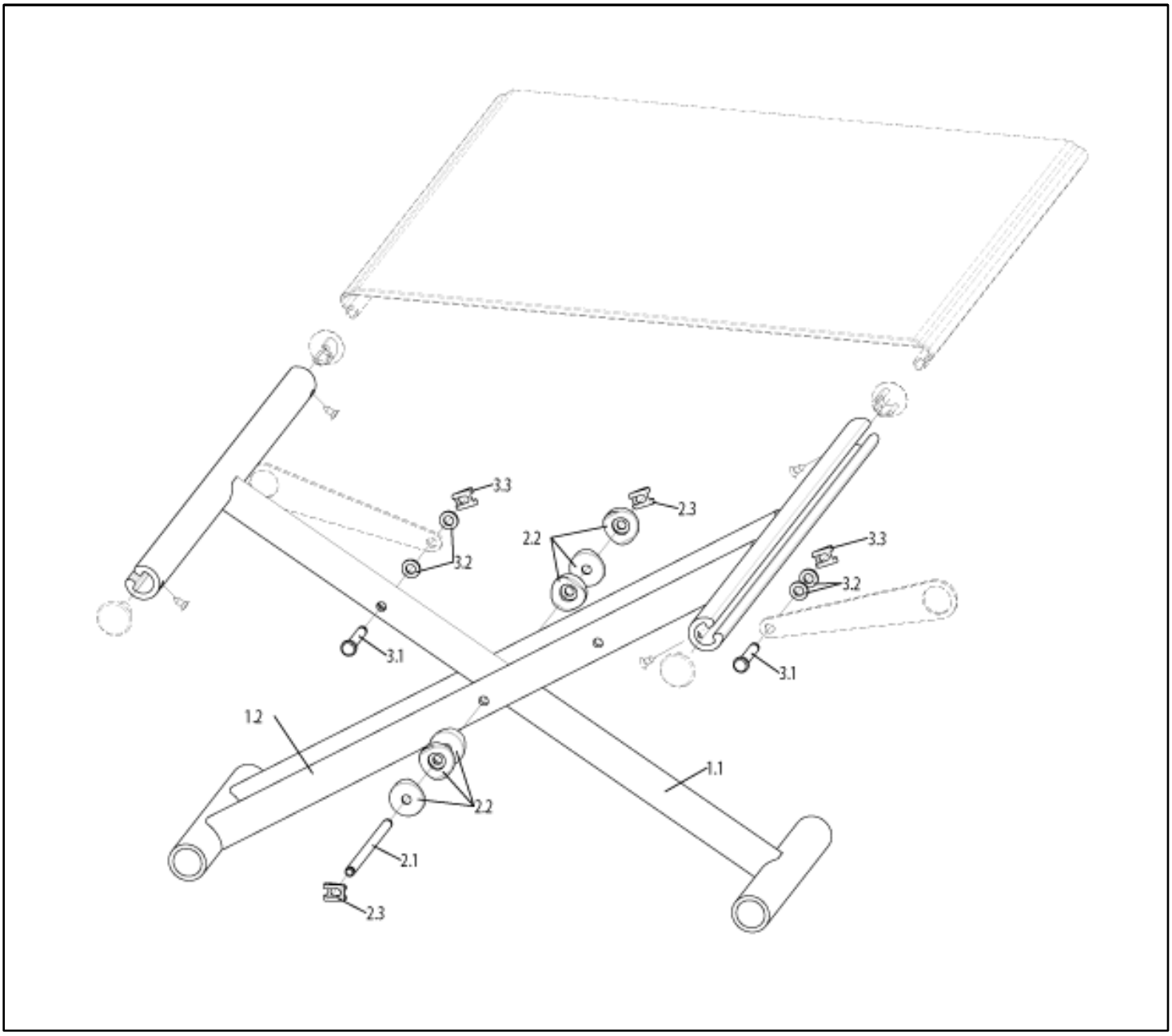

Pos	Itemnumber	Description	Comment
1.1-3.3	072304-001	X-Brace complete, black SW36 / SD36-38	
1.1-3.3	072304-002	X-Brace complete, black SW36 / SD40	
1.1-3.3	072304-003	X-Brace complete, black SW36 / SD42	
1.1-3.3	072304-004	X-Brace complete, black SW36 / SD44	
1.1-3.3	072304-005	X-Brace complete, black SW36 / SD46	
1.1-3.3	072304-006	X-Brace complete, black SW36 / SD48	
1.1-3.3	072304-007	X-Brace complete, black SW36 / SD50	
1.1-3.3	072304-008	X-Brace complete, black SW38 / SD36-38	
1.1-3.3	072304-009	X-Brace complete, black SW38 / SD40	

Cross Brace

Pos	Itemnumber	Description	Comment
1.1-3.3	072304-010	X-Brace complete, black SW38 / SD42	
1.1-3.3	072304-011	X-Brace complete, black SW38 / SD44	
1.1-3.3	072304-012	X-Brace complete, black SW38 / SD46	
1.1-3.3	072304-013	X-Brace complete, black SW38 / SD48	
1.1-3.3	072304-014	X-Brace complete, black SW38 / SD50	
1.1-3.3	072304-015	X-Brace complete, black SW40 / SD36-38	
1.1-3.3	072304-016	X-Brace complete, black SW40 / SD40	
1.1-3.3	072304-017	X-Brace complete, black SW40 / SD42	
1.1-3.3	072304-018	X-Brace complete, black SW40 / SD44	
1.1-3.3	072304-019	X-Brace complete, black SW40 / SD46	
1.1-3.3	072304-020	X-Brace complete, black SW40 / SD48	
1.1-3.3	072304-021	X-Brace complete, black SW40 / SD50	
1.1-3.3	072304-022	X-Brace complete, black SW42 / SD36-38	
1.1-3.3	072304-023	X-Brace complete, black SW42 / SD40	
1.1-3.3	072304-024	X-Brace complete, black SW42 / SD42	
1.1-3.3	072304-025	X-Brace complete, black SW42 / SD44	
1.1-3.3	072304-026	X-Brace complete, black SW42 / SD46	
1.1-3.3	072304-027	X-Brace complete, black SW42 / SD48	
1.1-3.3	072304-028	X-Brace complete, black SW42 / SD50	
1.1-3.3	072304-029	X-Brace complete, black SW44 / SD36-38	
1.1-3.3	072304-030	X-Brace complete, black SW44 / SD40	
1.1-3.3	072304-031	X-Brace complete, black SW44 / SD42	
1.1-3.3	072304-032	X-Brace complete, black SW44 / SD44	
1.1-3.3	072304-033	X-Brace complete, black SW44 / SD46	
1.1-3.3	072304-034	X-Brace complete, black SW44 / SD48	
1.1-3.3	072304-035	X-Brace complete, black SW44 / SD50	
1.1-3.3	072304-036	X-Brace complete, black SW46 / SD36-38	
1.1-3.3	072304-037	X-Brace complete, black SW46 / SD40	
1.1-3.3	072304-038	X-Brace complete, black SW46 / SD42	
1.1-3.3	072304-039	X-Brace complete, black SW46 / SD44	
1.1-3.3	072304-040	X-Brace complete, black SW46 / SD46	
1.1-3.3	072304-041	X-Brace complete, black SW46 / SD48	
1.1-3.3	072304-042	X-Brace complete, black SW46 / SD50	
1.1-3.3	072304-043	X-Brace complete, black SW48 / SD36-38	
1.1-3.3	072304-044	X-Brace complete, black SW48 / SD40	
1.1-3.3	072304-045	X-Brace complete, black SW48 / SD42	
1.1-3.3	072304-046	X-Brace complete, black SW48 / SD44	
1.1-3.3	072304-047	X-Brace complete, black SW48 / SD46	
1.1-3.3	072304-048	X-Brace complete, black SW48 / SD48	

Pos	Itemnumber	Description	Comment
1.1-3.3	072304-049	X-Brace complete, black SW48 / SD50	
1.1-3.3	072304-050	X-Brace complete, black SW50 / SD36-38	
1.1-3.3	072304-051	X-Brace complete, black SW50 / SD40	
1.1-3.3	072304-052	X-Brace complete, black SW50 / SD42	
1.1-3.3	072304-053	X-Brace complete, black SW50 / SD44	
1.1-3.3	072304-054	X-Brace complete, black SW50 / SD46	
1.1-3.3	072304-055	X-Brace complete, black SW50 / SD48	
1.1-3.3	072304-056	X-Brace complete, black SW50 / SD50	
2.1-2.3	84502017	Support with fitting, X-Brace center Hole	
2.2	84502001-ET	Half shell for cross-brace - black POM	
2.3	000185002-ET	SL safety nut, black	Pack of 25
3.1-3.3	072305	Support with fitting, X-Brace outer Hole	
3.2	000130106-ET	Washer A 6.4 DIN 125 PA-clear	Pack of 10
3.3	000185002-ET	SL safety nut, black	Pack of 25
1.1-3.3	072304-057	X-Brace complete, black SW34 /SD 50	
1.1-3.3	072304-058	X-Brace complete, black SW34 /SD 48	
1.1-3.3	072304-059	X-Brace complete, black SW34 /SD 46	
1.1-3.3	072304-060	X-Brace complete, black SW34 /SD 44	
1.1-3.3	072304-061	X-Brace complete, black SW34 /SD 42	
1.1-3.3	072304-062	X-Brace complete, black SW34 /SD 40	
1.1-3.3	072304-063	X-Brace complete, black SW34 /SD 36/38	
1.1-3.3	072304-064	X-Brace complete, black SW28 /SD 50	
1.1-3.3	072304-065	X-Brace complete, black SW30 /SD 50	
1.1-3.3	072304-066	X-Brace complete, black SW32 /SD 50	
1.1-3.3	072304-067	X-Brace complete, black SW28 /SD 48	
1.1-3.3	072304-068	X-Brace complete, black SW30 /SD 48	
1.1-3.3	072304-069	X-Brace complete, black SW32 /SD 48	
1.1-3.3	072304-070	X-Brace complete, black SW28 /SD 46	
1.1-3.3	072304-071	X-Brace complete, black SW30 /SD 46	
1.1-3.3	072304-072	X-Brace complete, black SW32 /SD 46	
1.1-3.3	072304-073	X-Brace complete, black SW28 /SD 44	
1.1-3.3	072304-074	X-Brace complete, black SW30 /SD 44	
1.1-3.3	072304-075	X-Brace complete, black SW32 /SD 44	
1.1-3.3	072304-076	X-Brace complete, black SW28 /SD 42	
1.1-3.3	072304-077	X-Brace complete, black SW30 /SD 42	
1.1-3.3	072304-078	X-Brace complete, black SW32 /SD 42	
1.1-3.3	072304-079	X-Brace complete, black SW28 /SD 40	
1.1-3.3	072304-080	X-Brace complete, black SW30 /SD 40	
1.1-3.3	072304-081	X-Brace complete, black SW32 /SD 40	

Cross Brace

Pos	Itemnumber	Description	Comment
1.1-3.3	072304-082	X-Brace complete, black SW28 /SD 36/38	
1.1-3.3	072304-083	X-Brace complete, black SW30 /SD 36/38	
1.1-3.3	072304-084	X-Brace complete, black SW32 /SD 36/38	
1.1-3.3	072304-085	X-Brace complete, black SW28 /SD 34	
1.1-3.3	072304-086	X-Brace complete, black SW30 /SD 34	
1.1-3.3	072304-087	X-Brace complete, black SW32 /SD 34	
1.1-3.3	072304-088	X-Brace complete, black SW34 //SD 34	
1.1-3.3	072304-089	X-Brace complete, black SW36/ SD 34	
1.1-3.3	072304-090	X-Brace complete, black SW38/ SD 34	
1.1-3.3	072304-091	X-Brace complete, black SW40/ SD 34	
1.1-3.3	072304-092	X-Brace complete, black SW42/ SD 34	
1.1-3.3	072304-093	X-Brace complete, black SW44/ SD 34	
1.1-3.3	072304-094	X-Brace complete, black SW46/ SD 34	
1.1-3.3	072304-095	X-Brace complete, black SW48/ SD 34	
1.1-3.3	072304-096	X-Brace complete, black SW50/ SD 34	
1.1-3.3	072304-097	X-Brace complete, black SW28 /SD 32	
1.1-3.3	072304-098	X-Brace complete, black SW30 /SD 32	
1.1-3.3	072304-099	X-Brace complete, black SW32 /SD 32	
1.1-3.3	072304-100	X-Brace complete, black SW34 /SD 32	
1.1-3.3	072304-101	X-Brace complete, black SW36/ SD 32	
1.1-3.3	072304-102	X-Brace complete, black SW38/ SD 32	
1.1-3.3	072304-103	X-Brace complete, black SW40/ SD 32	
1.1-3.3	072304-104	X-Brace complete, black SW42/ SD 32	
1.1-3.3	072304-105	X-Brace complete, black SW44/ SD 32	
1.1-3.3	072304-106	X-Brace complete, black SW46/ SD 32	
1.1-3.3	072304-107	X-Brace complete, black SW48/ SD 32	
1.1-3.3	072304-108	X-Brace complete, black SW50/ SD 32	

Seat Sling

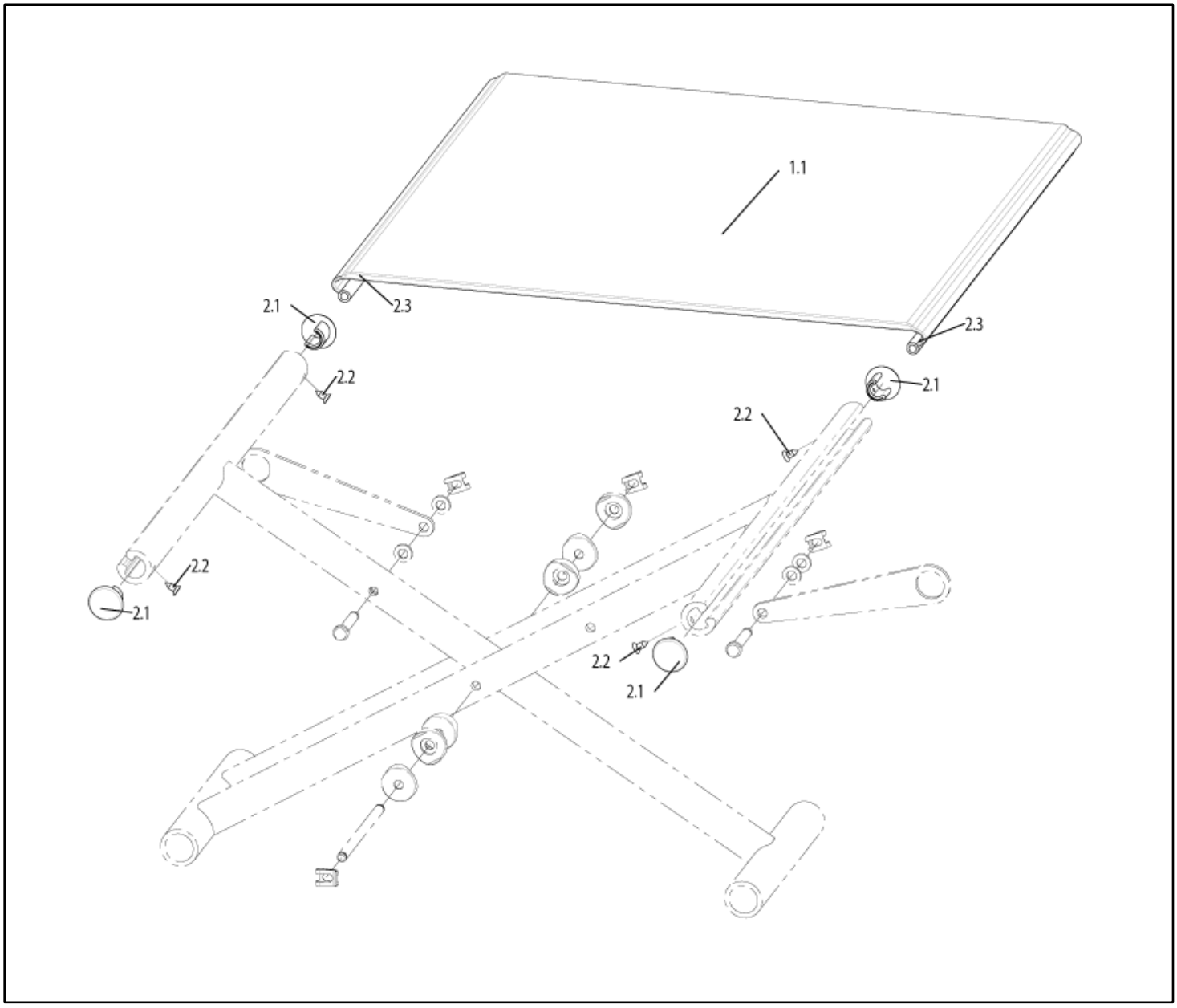

Pos	Itemnumber	Description	Comment
1.1,2.1-2.3	072302-001	Seat sling with utensil bag complete SW36 / SD36-38	
1.1,2.1-2.3	072302-002	Seat sling with utensil bag complete SW36 / SD40	
1.1,2.1-2.3	072302-003	Seat sling with utensil bag complete SW36 / SD42	
1.1,2.1-2.3	072302-004	Seat sling with utensil bag complete SW36 / SD44	
1.1,2.1-2.3	072302-005	Seat sling with utensil bag complete SW36 / SD46	
1.1,2.1-2.3	072302-006	Seat sling with utensil bag complete SW36 / SD48	

Seat Sling

Pos	Itemnumber	Description	Comment
1.1,2.1-2.3	072302-007	Seat sling with utensil bag complete SW36 / SD50	
1.1,2.1-2.3	072302-008	Seat sling with utensil bag complete SW38 / SD36-38	
1.1,2.1-2.3	072302-009	Seat sling with utensil bag complete SW38 / SD40	
1.1,2.1-2.3	072302-010	Seat sling with utensil bag complete SW38 / SD42	
1.1,2.1-2.3	072302-011	Seat sling with utensil bag complete SW38 / SD44	
1.1,2.1-2.3	072302-012	Seat sling with utensil bag complete SW38 / SD46	
1.1,2.1-2.3	072302-013	Seat sling with utensil bag complete SW38 / SD48	
1.1,2.1-2.3	072302-014	Seat sling with utensil bag complete SW38 / SD50	
1.1,2.1-2.3	072302-015	Seat sling with utensil bag complete SW40 / SD36-38	
1.1,2.1-2.3	072302-016	Seat sling with utensil bag complete SW40 / SD40	
1.1,2.1-2.3	072302-017	Seat sling with utensil bag complete SW40 / SD42	
1.1,2.1-2.3	072302-018	Seat sling with utensil bag complete SW40 / SD44	
1.1,2.1-2.3	072302-019	Seat sling with utensil bag complete SW40 / SD46	
1.1,2.1-2.3	072302-020	Seat sling with utensil bag complete SW40 / SD48	
1.1,2.1-2.3	072302-021	Seat sling with utensil bag complete SW40 / SD50	
1.1,2.1-2.3	072302-022	Seat sling with utensil bag complete SW42 / SD36-38	
1.1,2.1-2.3	072302-023	Seat sling with utensil bag complete SW42 / SD40	
1.1,2.1-2.3	072302-024	Seat sling with utensil bag complete SW42 / SD42	
1.1,2.1-2.3	072302-025	Seat sling with utensil bag complete SW42 / SD44	
1.1,2.1-2.3	072302-026	Seat sling with utensil bag complete SW42 / SD46	
1.1,2.1-2.3	072302-027	Seat sling with utensil bag complete SW42 / SD48	
1.1,2.1-2.3	072302-028	Seat sling with utensil bag complete SW42 / SD50	
1.1,2.1-2.3	072302-029	Seat sling with utensil bag complete SW44 / SD36-38	
1.1,2.1-2.3	072302-030	Seat sling with utensil bag complete SW44 / SD40	
1.1,2.1-2.3	072302-031	Seat sling with utensil bag complete SW44 / SD42	

Pos	Itemnumber	Description	Comment
1.1,2.1-2.3	072302-032	Seat sling with utensil bag complete SW44 / SD44	
1.1,2.1-2.3	072302-033	Seat sling with utensil bag complete SW44 / SD46	
1.1,2.1-2.3	072302-034	Seat sling with utensil bag complete SW44 / SD48	
1.1,2.1-2.3	072302-035	Seat sling with utensil bag complete SW44 / SD50	
1.1,2.1-2.3	072302-036	Seat sling with utensil bag complete SW46 / SD36-38	
1.1,2.1-2.3	072302-037	Seat sling with utensil bag complete SW46 / SD40	
1.1,2.1-2.3	072302-038	Seat sling with utensil bag complete SW46 / SD42	
1.1,2.1-2.3	072302-039	Seat sling with utensil bag complete SW46 / SD44	
1.1,2.1-2.3	072302-040	Seat sling with utensil bag complete SW46 / SD46	
1.1,2.1-2.3	072302-041	Seat sling with utensil bag complete SW46 / SD48	
1.1,2.1-2.3	072302-042	Seat sling with utensil bag complete SW46 / SD50	
1.1,2.1-2.3	072302-043	Seat sling with utensil bag complete SW48 / SD36-38	
1.1,2.1-2.3	072302-044	Seat sling with utensil bag complete SW48 / SD40	
1.1,2.1-2.3	072302-045	Seat sling with utensil bag complete SW48 / SD42	
1.1,2.1-2.3	072302-046	Seat sling with utensil bag complete SW48 / SD44	
1.1,2.1-2.3	072302-047	Seat sling with utensil bag complete SW48 / SD46	
1.1,2.1-2.3	072302-048	Seat sling with utensil bag complete SW48 / SD48	
1.1,2.1-2.3	072302-049	Seat sling with utensil bag complete SW48 / SD50	
1.1,2.1-2.3	072302-050	Seat sling with utensil bag complete SW50 / SD36-38	
1.1,2.1-2.3	072302-051	Seat sling with utensil bag complete SW50 / SD40	
1.1,2.1-2.3	072302-052	Seat sling with utensil bag complete SW50 / SD42	
1.1,2.1-2.3	072302-053	Seat sling with utensil bag complete SW50 / SD44	
1.1,2.1-2.3	072302-054	Seat sling with utensil bag complete SW50 / SD46	
1.1,2.1-2.3	072302-055	Seat sling with utensil bag complete SW50 / SD48	
1.1,2.1-2.3	072302-056	Seat sling with utensil bag complete SW50 / SD50	

Seat Sling

Pos	Itemnumber	Description	Comment
2.1-2.3	072303-001	Fitting accessories for seat sling SD36	one side only
2.1-2.3	072303-002	Fitting accessories for seat sling SD38	one side only
2.1-2.3	072303-003	Fitting accessories for seat sling SD40	one side only
2.1-2.3	072303-004	Fitting accessories for seat sling SD42	one side only
2.1-2.3	072303-005	Fitting accessories for seat sling SD44	one side only
2.1-2.3	072303-006	Fitting accessories for seat sling SD46	one side only
2.1-2.3	072303-007	Fitting accessories for seat sling SD48	one side only
2.1-2.3	072303-008	Fitting accessories for seat sling SD50	one side only
2.1	720831606-ET	End stoppers	Pack of 10
2.2	000114000-ET	Countersunk screw SD 3.9 x 9.5 DIN 7982	Pack of 25
2.1-2.3	072303-009	Fitting accessories for seat sling SD34	one side only
2.1-2.3	072303-012	Fitting accessories for seat sling SD32	one side only
1.1,2.1-2.3	072302-133	Seat sling with utensil bag complete SW28 SD32 cpl.	
1.1,2.1-2.3	072302-134	Seat sling with utensil bag complete SW28 SD34 cpl.	
1.1,2.1-2.3	072302-135	Seat sling with utensil bag complete SW28 SD36 cpl.	
1.1,2.1-2.3	072302-136	Seat sling with utensil bag complete SW28 SD38 cpl.	
1.1,2.1-2.3	072302-137	Seat sling with utensil bag complete SW28 SD40 cpl.	
1.1,2.1-2.3	072302-138	Seat sling with utensil bag complete SW28 SD42 cpl.	
1.1,2.1-2.3	072302-139	Seat sling with utensil bag complete SW28 SD44 cpl.	
1.1,2.1-2.3	072302-140	Seat sling with utensil bag complete SW28 SD46 cpl.	
1.1,2.1-2.3	072302-141	Seat sling with utensil bag complete SW28 SD48 cpl.	
1.1,2.1-2.3	072302-142	Seat sling with utensil bag complete SW28 SD50 cpl.	
1.1,2.1-2.3	072302-143	Seat sling with utensil bag complete SW30 SD32 cpl.	
1.1,2.1-2.3	072302-144	Seat sling with utensil bag complete SW30 SD34 cpl.	
1.1,2.1-2.3	072302-145	Seat sling with utensil bag complete SW30 SD36 cpl.	
1.1,2.1-2.3	072302-146	Seat sling with utensil bag complete SW30 SD38 cpl.	
1.1,2.1-2.3	072302-147	Seat sling with utensil bag complete SW30 SD40 cpl.	
1.1,2.1-2.3	072302-148	Seat sling with utensil bag complete SW30 SD42 cpl.	
1.1,2.1-2.3	072302-149	Seat sling with utensil bag complete SW30 SD44 cpl.	

Pos	Itemnumber	Description	Comment
1.1,2.1-2.3	072302-150	Seat sling with utensil bag complete SW30 SD46 cpl.	
1.1,2.1-2.3	072302-151	Seat sling with utensil bag complete SW30 SD48 cpl.	
1.1,2.1-2.3	072302-152	Seat sling with utensil bag complete SW30 SD50 cpl.	
1.1,2.1-2.3	072302-153	Seat sling with utensil bag complete SW32 SD32 cpl.	
1.1,2.1-2.3	072302-154	Seat sling with utensil bag complete SW34 SD32 cpl.	
1.1,2.1-2.3	072302-155	Seat sling with utensil bag complete SW36 SD32 cpl.	
1.1,2.1-2.3	072302-156	Seat sling with utensil bag complete SW38 SD32 cpl.	
1.1,2.1-2.3	072302-157	Seat sling with utensil bag complete SW40 SD32 cpl.	
1.1,2.1-2.3	072302-158	Seat sling with utensil bag complete SW42 SD32 cpl.	
1.1,2.1-2.3	072302-159	Seat sling with utensil bag complete SW44 SD32 cpl.	
1.1,2.1-2.3	072302-160	Seat sling with utensil bag complete SW46 SD32 cpl.	
1.1,2.1-2.3	072302-161	Seat sling with utensil bag complete SW48 SD32 cpl.	
1.1,2.1-2.3	072302-162	Seat sling with utensil bag complete SW50 SD32 cpl.	

Caddy

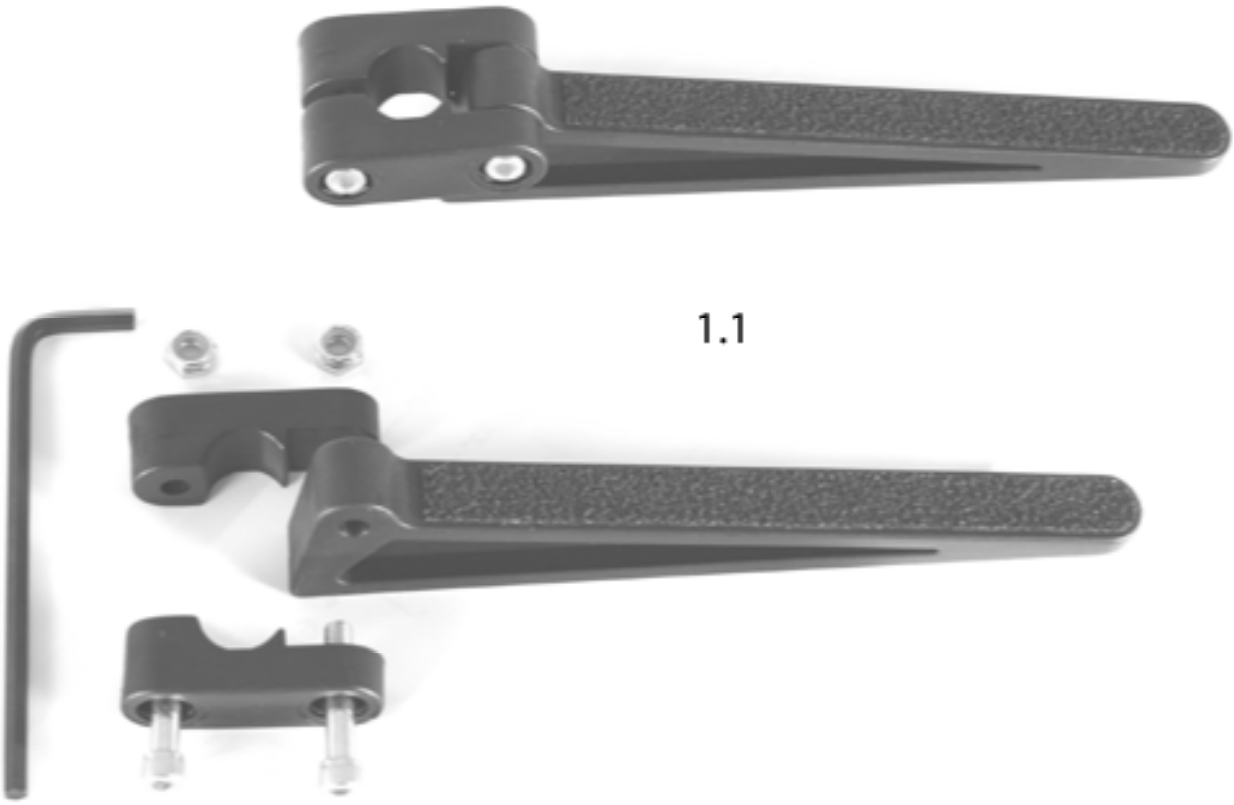

Pos	Itemnumber	Description	Comment
1.1	L902350	Caddy, bag carrier, cpl.	Pair

Tool kit

Pos	Itemnumber	Description
1	000604270	Tools kit

Wheelchair Backback

Pos	Itemnumber	Description
1.1	000670001	Wheelchair backpack, black

Lap Belt with Fastener

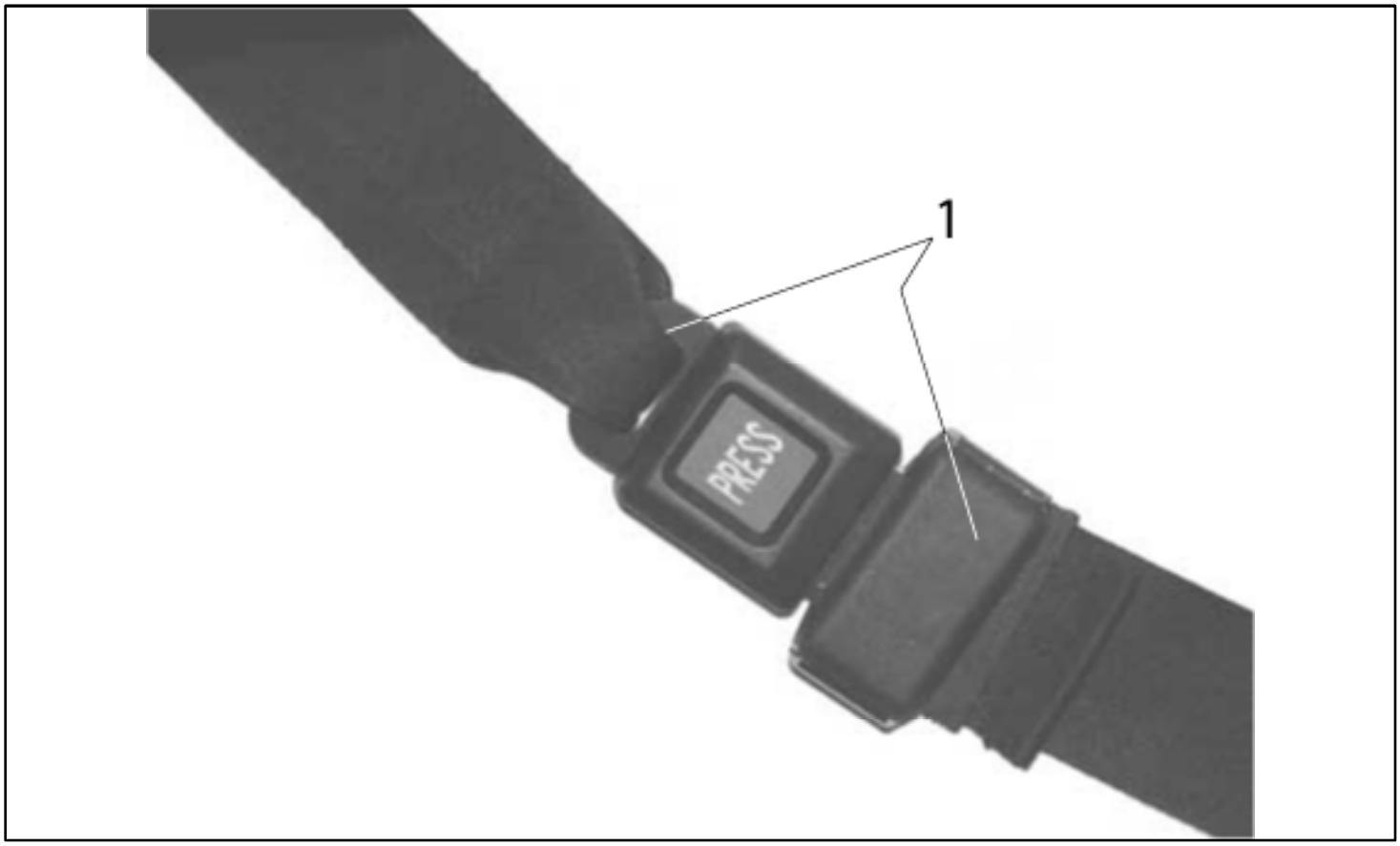

Pos	Itemnumber	Description
1	069939	Lap belt with fastener up to SW: 40
1	069935	Lap belt with fastener from SW: 42

Mobile Phone Case

Pos	Itemnumber	Description	Comment
1	000670006	Mobile phone case QIUCKIE	Für alle Stuhltypen passend
2	000670005	Mobile phone case SOPUR	Für alle Stuhltypen passend

Frame adapter for accessories

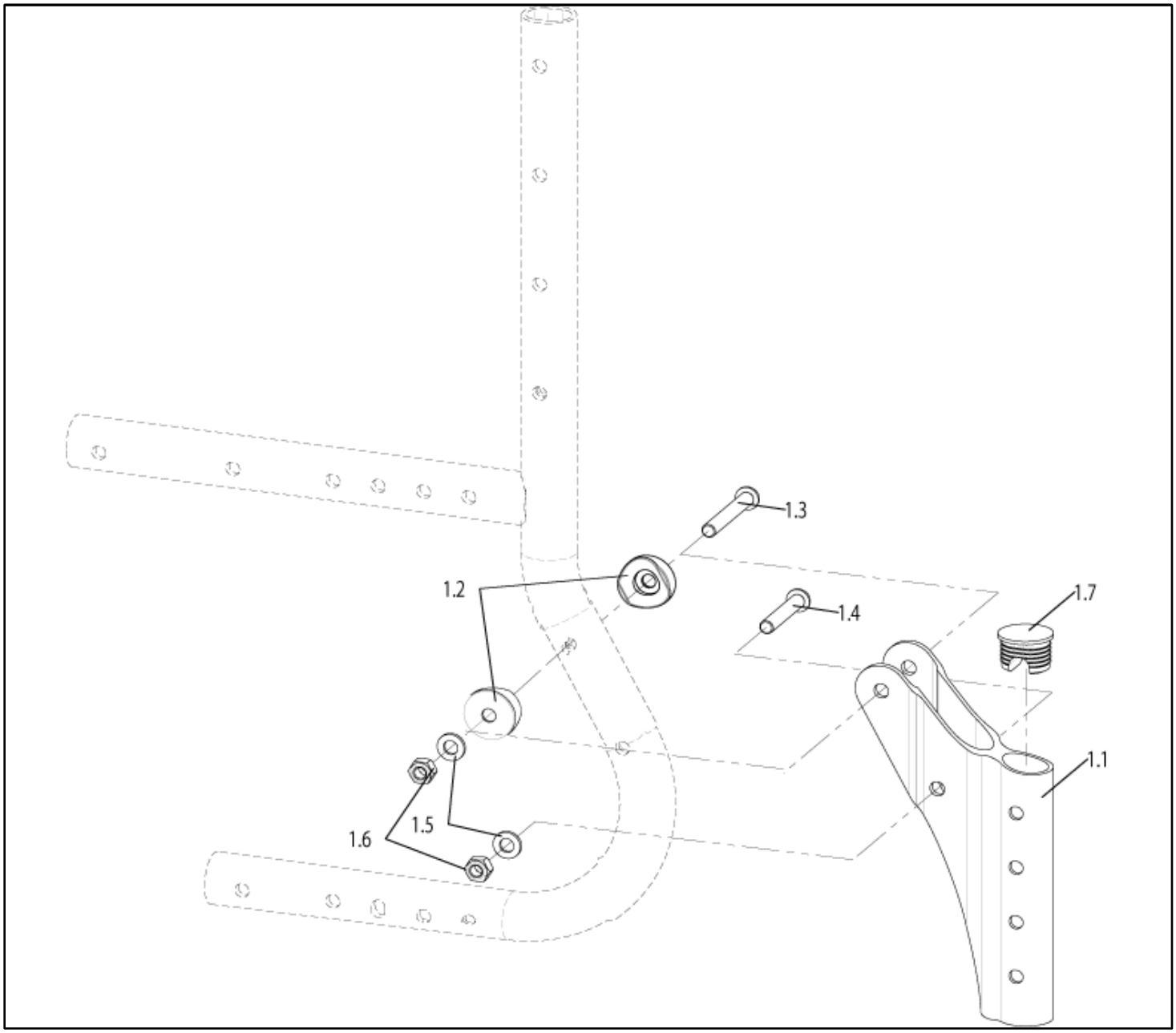

Pos	Itemnumber	Description	Comment
1.1-1-7	072705	Accessories fixation complete	can be used right & left
1.2	000831232-ET	Half shell for cross-brace - black POM	Pack of 10
1.3	000102056.01-ET	Screw M 6 x 45 mit Torx-Antrieb	Pack of 25
1.4	000102317.01-ET	Screw M 6 x 37 mit Torx-Antrieb	Pack of 25
1.5	000130107-ET	Washer A6.4 DIN 125	Pack of 25
1.6	000128007-ET	Hex nut M 6 DIN 985	Pack of 25
1.7	760827007-ET	End stoppers	Pack of 10

Transit Wheel

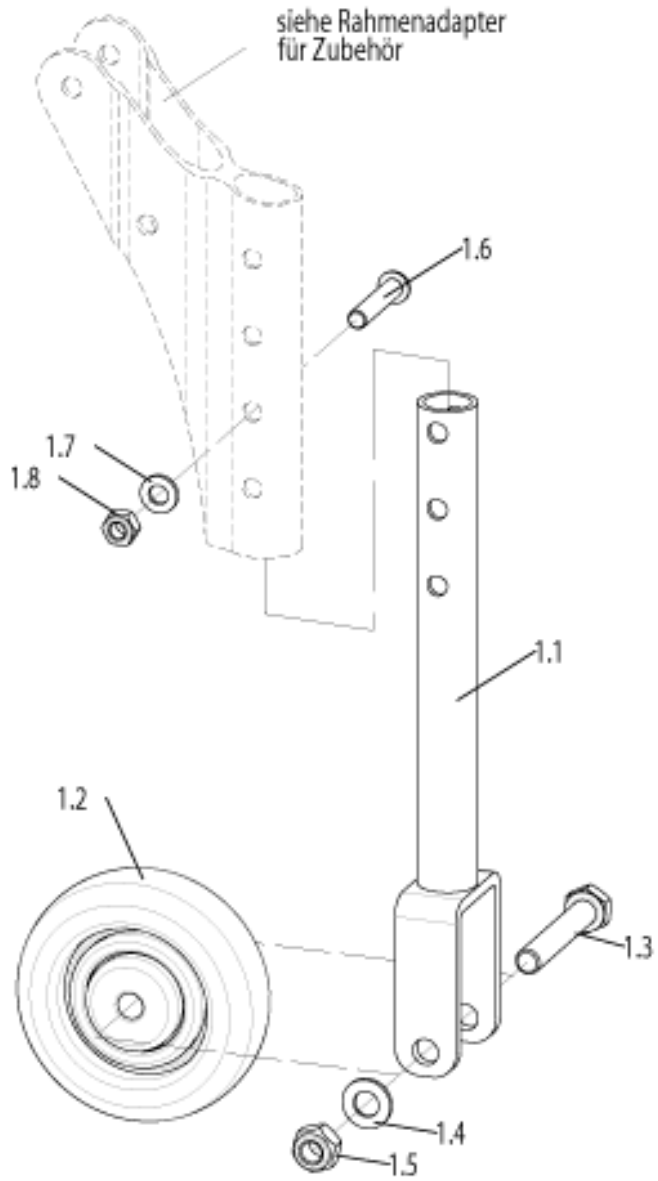

Pos	Itemnumber	Description	Comment
1.1-1-8	760858020	Transit wheel, cpl.	can be used right & left
1.3	000100016-ET	Hex screw M 8 x 50 DIN 931	Pack of 25
1.4	000130108-ET	A 8.4 washer DIN 125	Pack of 25
1.5	000128018-ET	Hex nut M 8 DIN 985	Pack of 25
1.6	000102312.01-ET	Oval-head screw M 6 x 32 with Torx drive	Pack of 25
1.7	000130107-ET	Washer A6.4 DIN 125	Pack of 25

Pos	Itemnumber	Description	Comment
1.8	000128007-ET	Hex nut M 6 DIN 985	Pack of 25

Upholstery

Seat- and Backslings are customized manufactured and excluded from replacements!

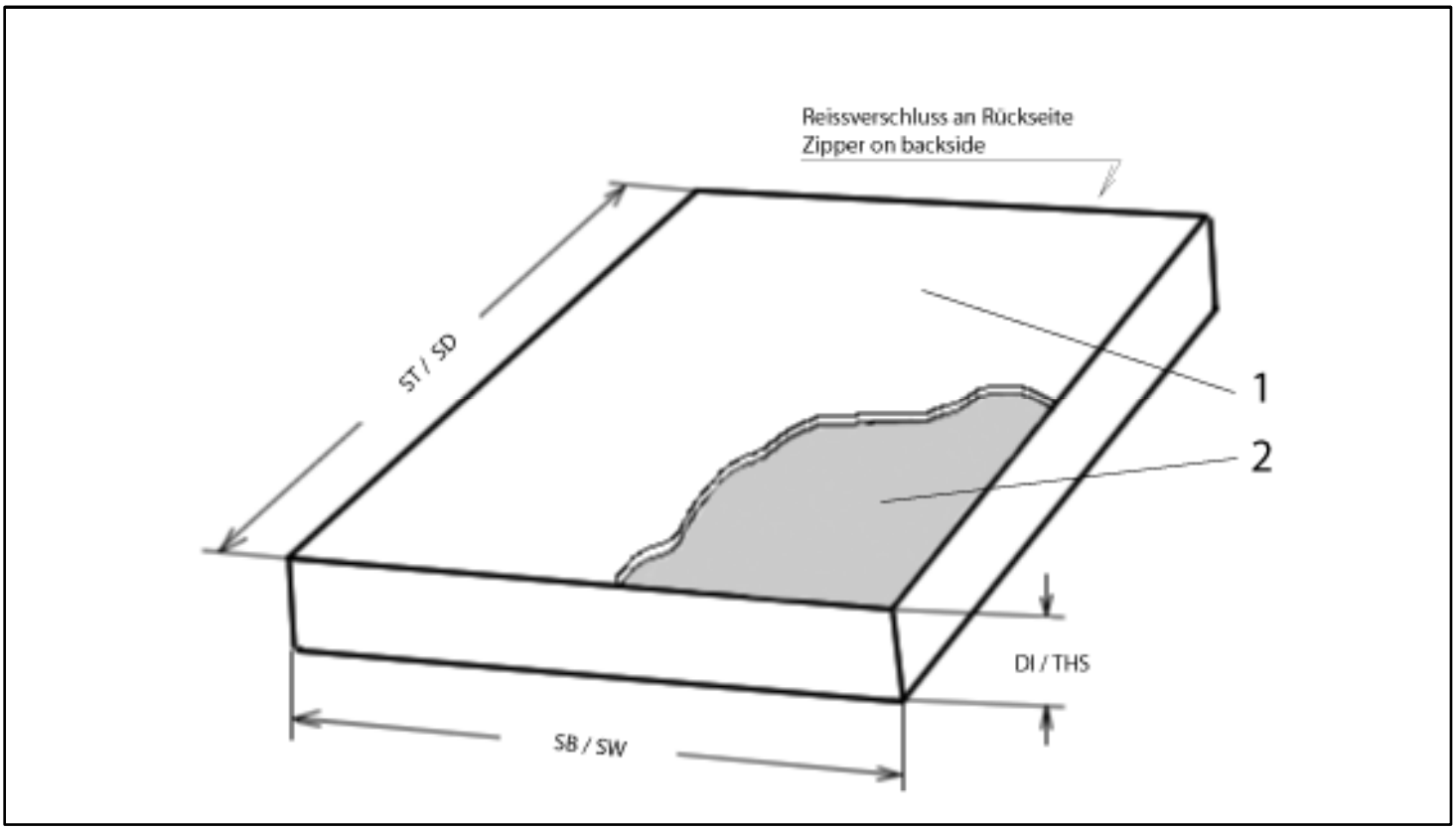

Pos	Itemnumber	Description	Comment
1-2	000 835 002	Seat cushion and cover, black complete, cushion filling: Composite foam = 92	
1-2	000 835 003	Seat cushion and cover, black complete, cushion filling: Latex = 55	
1-2	000 898 063	KLIMA-TEX seat cushion and cover, black complete, cushion filling: Latex = 55	
1-2	000 898 060	KLIMA-TEX seat cushion and cover, black, cpl. Cushion filling: foam = 92	Only 3 or 5 cm thick
2	000 835 810	Seat cushion, filling composite foam	
2	000 835 820	Seat cushion, filling Latex	
1	000 836 002	Seat cushion cover, black	
-	000 845 010	Back cushion 3 cm. Black cover	

Anti-tip tube

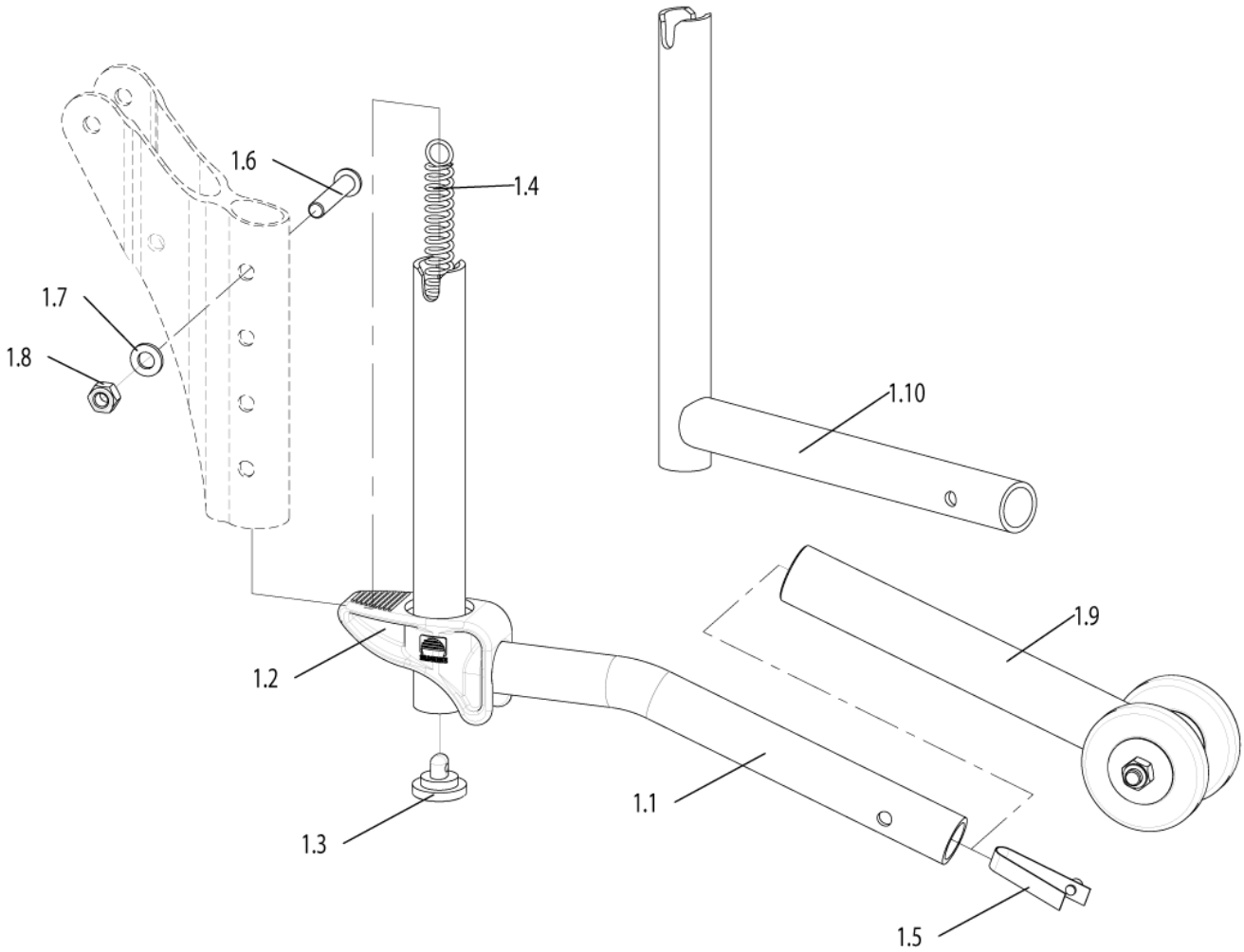

Pos	Itemnumber	Description	Comment
1.1-1.9	000859202	Swingaway anti-tip tubes for 24Inch and 26Inch cpl. (without frame adapter)	can be used right & left
1.2-1.10	000859212	Swingaway anti-tip tube, complete. For 20Inch and 22Inch rear wheels	can be used right & left
1.1-1.8	000859201	Anti-tip tube adapter 24Inch and 26Inch cpl.	
1.2-1.8,1.10	000859203	Anti-tip tube adapter 20Inch and 22Inch cpl.	
1.1	000859205	Anti-tip tube adapter 24Inch and 26Inch	
1.2	000859001	Pedal for anti-tip tube	
1.3	000859204	Bracket for tension spring	
1.4	000242024	Tension spring for anti-tip tube	
1.5	064711-ET	Support spring with bolt d = 5 mm	5 pcs./pack
1.6	000102312.01-ET	Oval-head screw M 6 x 32 with Torx drive	Pack of 25

Anti-tip tube

Pos	Itemnumber	Description	Comment
1.7	000130107-ET	Washer A6.4 DIN 125	Pack of 25
1.8	000128007-ET	Hex nut M 6 DIN 985	Pack of 25
1.9	000859208	Holder for anti-tip tube, complete	
1.10	000859207	Anti-tip tube adapter 20Inch / 22Inch	

Anti tip tubes swing away, aluminium lightweight

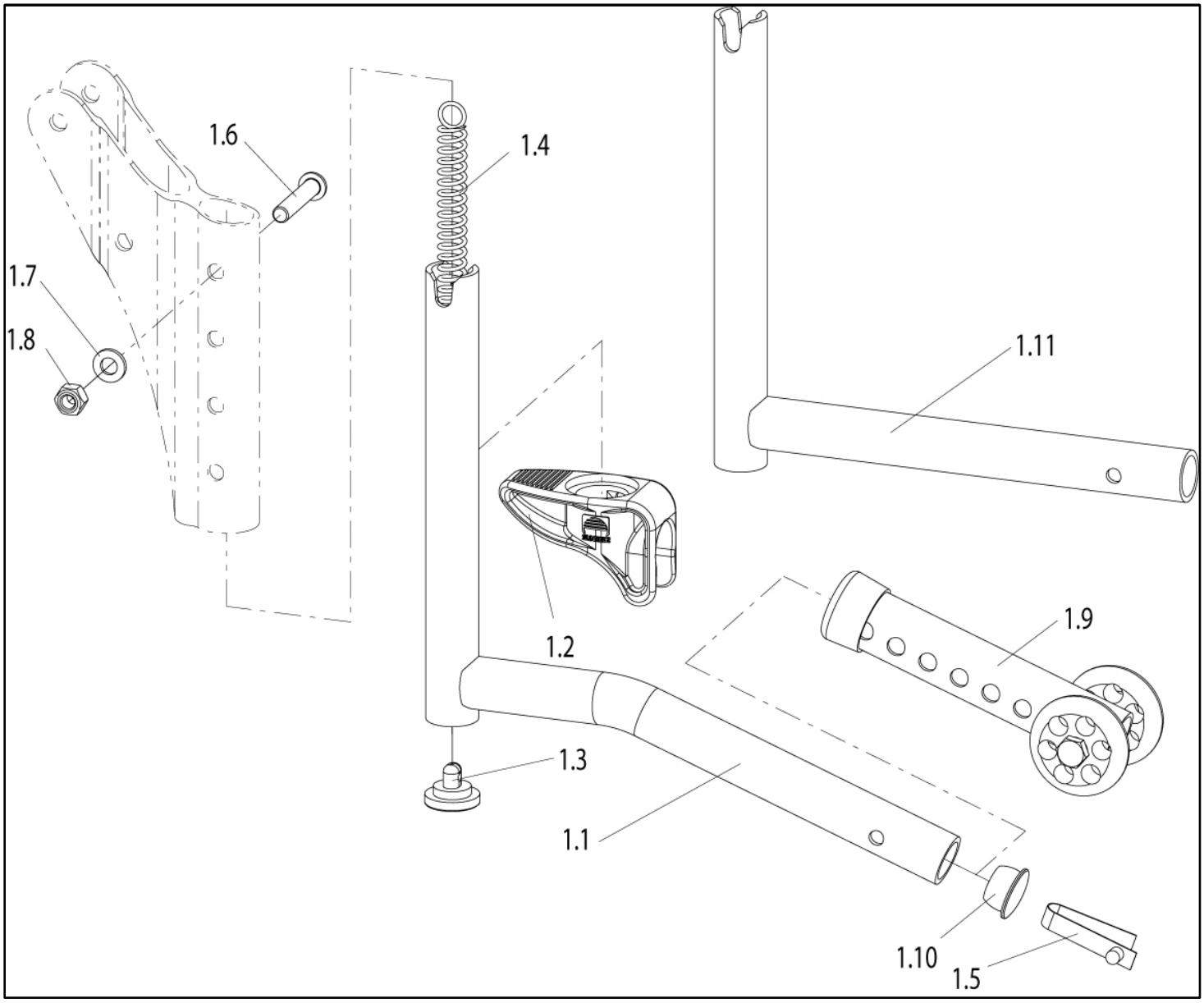

Pos	Itemnumber	Description	Comment
1.1-1.10	072714-002	Swingaway anti-tip tubes for 24Inch and 26Inch cpl. (without frame adapter)	Pair
1.1+1.5+	84307005	Anti-tip tube adapter, aluminium lightweight, 24Inch and 26Inch	
1.2-1.11	072714-001	Swingaway anti-tip tubes for 20Inch and 22Inch cpl. (without frame adapter)	Pair
1.2-1.8	069934	Bracket incl. mounting accessories used with slide-on thrapy table	
1.2	000859001	Pedal for anti-tip tube	
1.3	000859204	Bracket for tension spring	
1.4	000242024	Tension spring for anti-tip tubes	
1.5	064711-ET	Support spring with bolt d = 5 mm	
1.6	000102312.01-ET	oval-head screw M 6 x 32 with Torx drive	25 pcs./pack

Anti tip tubes swing away, aluminium lightweight

Pos	Itemnumber	Description	Comment
1.7	000130107-ET	Washer A 6.4 DIN 125	25 pcs./pack
1.8	000128007-ET	Hex nut M 6 DIN 985	25 pcs./pack
1.10	756841055-ET	Plastic plug	10 pcs./pack
1.11+1.5	84307009	Anti-tip tube adapter, aluminium lightweight, 20Inch and 22Inch	

Tipping tube

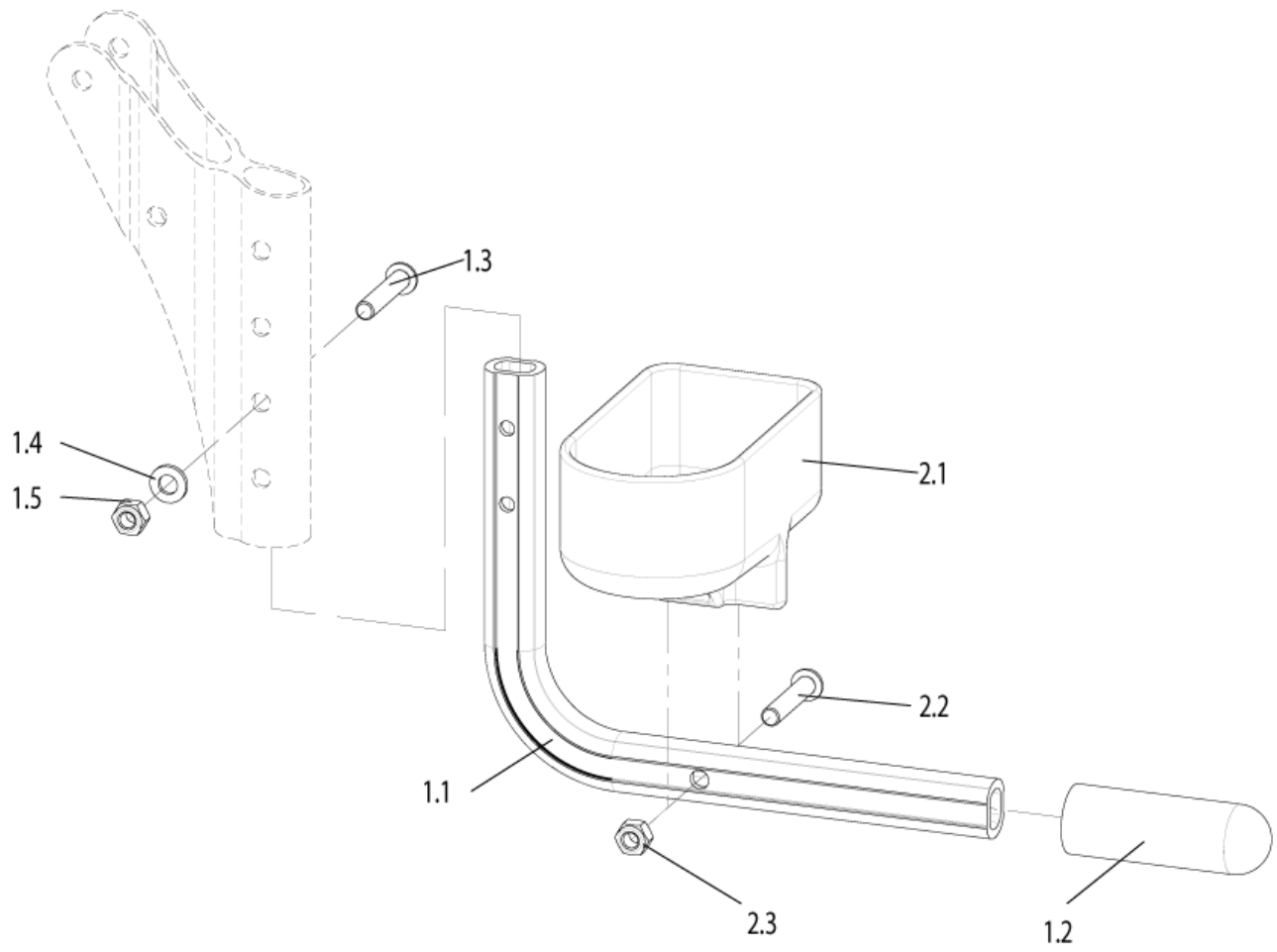

Pos	Itemnumber	Description	Comment
1.1-1.5	740815115	Tipping tube cpl.	can be used right & left
1.2	000282041-ET	Cap 18 x 28, black PVC	Pack of 10
1.3	000102312.01-ET	Oval-head screw M 6 x 32 with Torx drive	Pack of 25
1.4	000130107-ET	Washer A6.4 DIN 125	Pack of 25
1.5	000128007-ET	Hex nut M 6 DIN 985	Pack of 25
2.1-2.3	740815120	Crutch Holder with Velcro cpl.	
2.2	000102312.01-ET	Oval-head screw M 6 x 32 with Torx drive	Pack of 25
2.3	000128007-ET	Hex nut M 6 DIN 985	Pack of 25

Therapy table swingaway

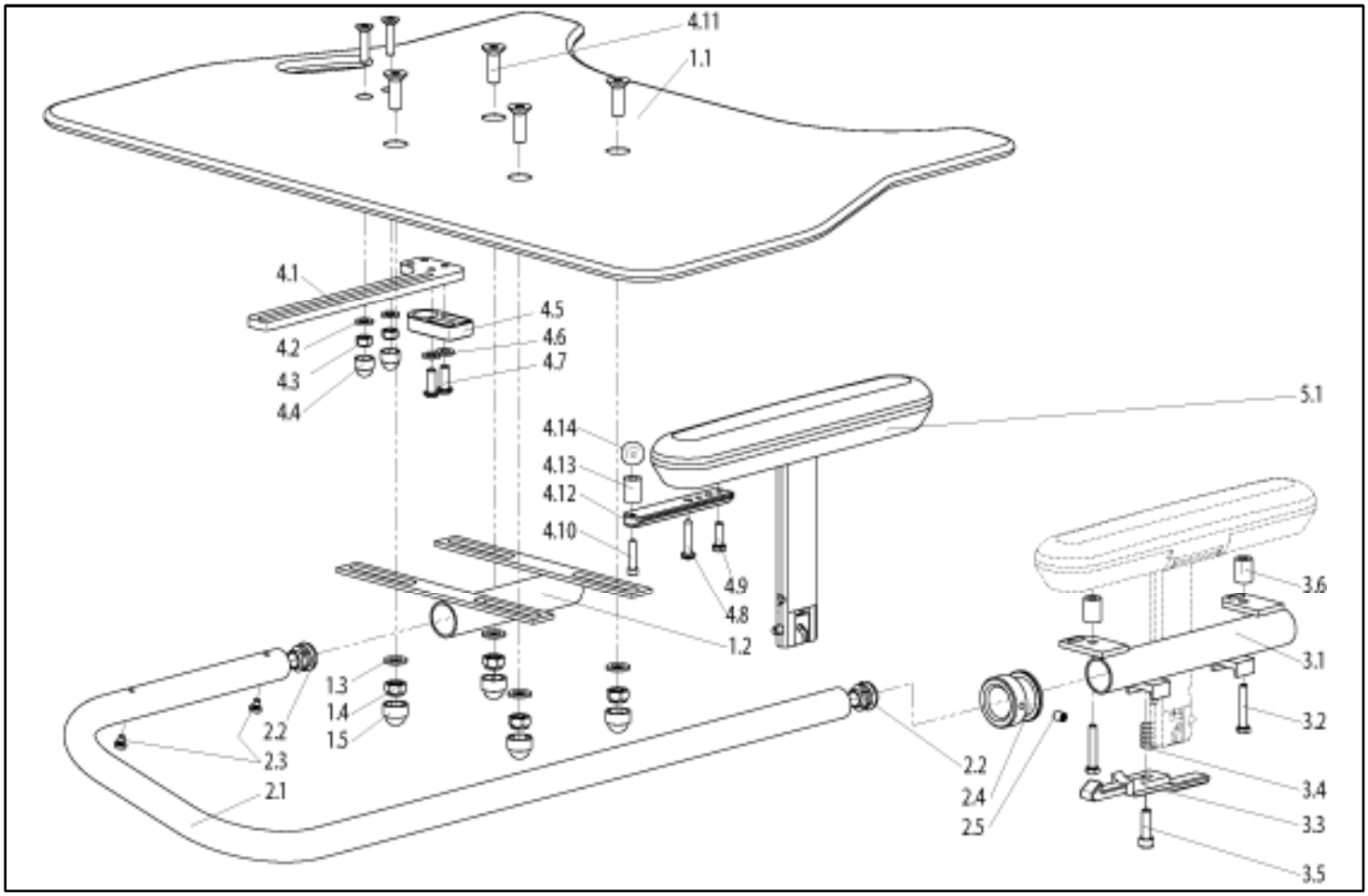

Pos	Itemnumber	Description	Comment
1.1-4.14	054427-001	Therapy table, swingaway complete. For Desk-III - sideguard, without armrests, swingaway to the right	right
1.1-4.14	054427-002	Therapy table, swingaway complete. For Desk-III - sideguard, without armrests, swingaway to the left	left
1.2-4.14	054427-003	Therapy table, swingaway for Desk-III sideguard, without armrests, without table top, swingaway to the right	right
1.2-4.14	054427-004	Therapy table, swingaway for Desk-III sideguard, without armrests, without table top, swingaway to the left	left
1.1-2.5	760 848 006	Table top for standard therapy table, swingaway, complete. With swingaway mechanism (without plug-in bracket)	
1.3	000 130 108-ET	A 8.4 washer DIN 125	Pack of 25
1.4	000 128 018-ET	Hex nut M 8 DIN 985	Pack of 25
1.5	000 282 062-ET	Hex protective cap for M 8 plastic, black	Pack of 25
1.6	000 104 033-ET	Countersunk head screw M 8 x 25 DIN 7991	Pack of 10
2.1	760 847 104	Swing bar for SW: 34 to 40	
2.1	410 847 012	Swing bar for SW: 42 to 50	
2.2	000 282 038-ET	Laminated cap for swing bar	
2.3	000 102 065-ET	Oval-head screw M 4 x 6 DIN 7985	Pack of 50

Pos	Itemnumber	Description	Comment
3.1-3.6	760 748 005	Plug-in bracket for therapy table left, complete. Swingaway to the left	left
3.1-3.6	760 848 005	Plug-in bracket for therapy table right, complete. Swingaway to the right	right
3.2	000 100 045-ET	Hex screw M 5 x 30 DIN 933	Pack of 10
3.3	750 842 099.01	Interlock lever, curved	
3.4	000242030-ET	Compression spring	Pack of 10
3.5	000 102 199-ET	Cheese head screw M 6 x 20 DIN 84	Pack of 25
4.1-4.14	760 848 007	Fitting on the free side for therapy table, complete	
4.2/4.6	000 130 107-ET	A 6.4 washer DIN 125	Pack of 25
4.3	000 128 007-ET	Hex nut M 6 DIN 985	Pack of 25
4.4	000 282 063-ET	Hex protective cap for M 6 plastic, black	Pack of 10
4.7	000 102 309.01-ET	Oval-head screw M 6 x 16 with Torx drive	Pack of 25
4.8	000 100 028-ET	Hex screw M 5 x 16/8.8 DIN 558	Pack of 25
4.9	000 100 027-ET	Hex screwM 5 x 16 DIN 558	Pack of 25
4.10	000102153-ET	Hex screw M 4 x 12 DIN 933	Pack of 50
4.11	000 104 053-ET	Countersunk head screw M 6 x 35 DIN 7991	Pack of 25
4.13	000 281 016	Spacer roll, black - 12 / 16.2 / 16	
4.14	000 281 018	Dome head DIN 319 - KU-16-M4-E	
4.8-5.1	054449-005	Long armpad, height-adjustable, swing away for tray	right
4.8-5.1	054449-006	Long armpad, height-adjustable, swing away for tray	left
4.8-5.1	054428-010	Long armpad, fixed, swing away for tray	right
4.8-5.1	054428-011	Long armpad, fixed, swing away for tray	left

Therapy table

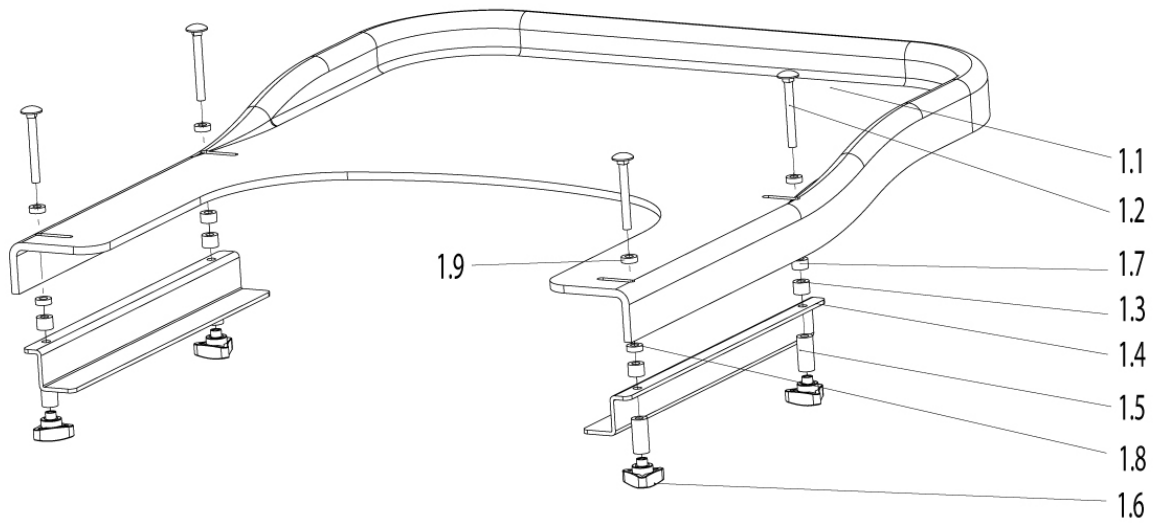

Pos	Itemnumber	Description	Comment
1.1-1.9	760 848 050.01	Therapy table for SW: 38 -40 complete	
1.1-1.9	760 848 050.02	Therapy table for SW: 42 -44 complete	
1.1-1.9	760 848 050.03	Therapy table for SW: 46 - 48 complete	
1.2-1.9	069934	Bracket incl. mounting accessories used with slide-on thrapy table	

Accessories

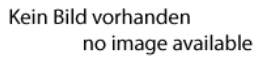

Pos	Itemnumber	Description	Comment
	000859104	Air pump with mounting	
	000228005	High Pressure Pump	

Tray table, used from SW 22 to 36 cm

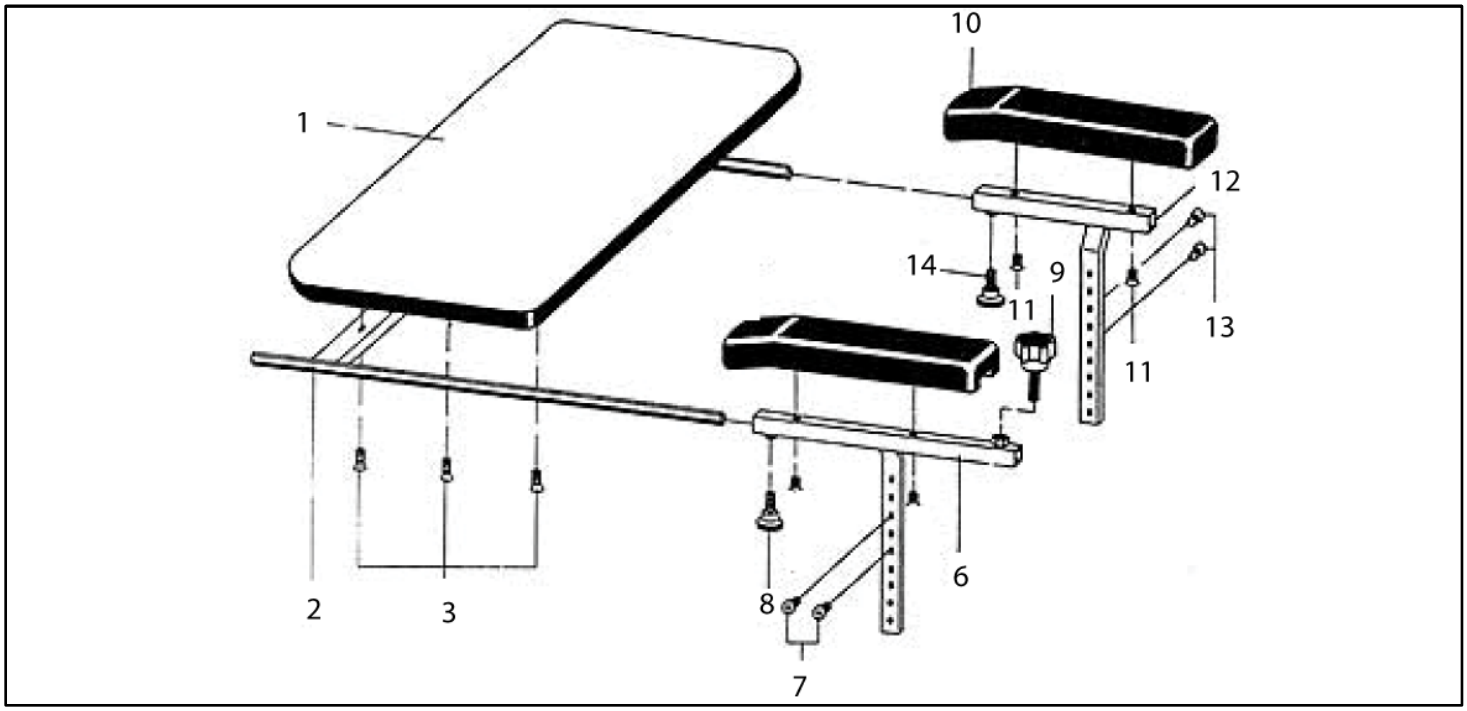

Pos	Itemnumber	Description	Comment
1 - 14	810848001	Tray table with armrests, complete	
1 - 3	810848002	Tray table with bracket	
2	810848004	Bracket for tray table	
6 - 14	810948008	Armrests for tray table, complete	Pair
10 - 14	810848008	Armrest for tray table, complete	right
6 - 9	810748008	Armrest for tray table, complete	left
12 - 14	810848011	Armrest bracket	right
6 - 9	810748011	Armrest bracket	left
10 - 11	000848009	Arm pad, complete	right
7, 13	000104044-ET	Countersunk head screw M 5 x 8 DIN 965	pack of 25
8, 14	000107016-ET	Knurled screw M 6 x 16 DIN 464	pack of 4
9	000841079	Star wheel screw M 8 x 28	
3	000114004-ET	Countersunk head screw M 4.8 x 13 DIN 7982	pack of 25
11	000104000-ET	Countersunk head screw M 5 x 12 DIN 965	pack of 25